DAIKIN

ED 34 - 762A

R-410A

Engineering Data

VRV® III

THE INTELLIGENT AIR CONDITIONING SYSTEM

COOLING ONLY

Cooling Only
50 Hz

Introduction ii

Part 1 General Information 1 1

Part 2 Indoor Units 43

Ceiling Mounted Cassette Type (Double Flow) ..... 2 FXCQ-M 45

Ceiling Mounted Cassette Type (Multi Flow) ..... 3 FXFQ-M 67

Ceiling Mounted Cassette Corner Type ..... 4 FXKQ-MA 111

Slim Ceiling Mounted Duct Type ..... 5 FXDQ-P, N(A) 131

Ceiling Mounted Built-In Type ..... 6 FXSQ-M 171

Ceiling Mounted Duct Type ..... 7 FXMQ-MA 213

Ceiling Suspended Type ..... 8 FXHQ-MA 239

Wall Mounted Type ..... 9 FXAQ-MA 255

Floor Standing Type / Concealed Floor Standing Type ..... 10 FXLQ/FXNQ-MA 279

Ceiling Suspended Cassette Type (Connection Unit Series) 11 FXUQ-MA 301

Part 3 Outdoor Air Processing Unit 335

Outdoor Air Processing Unit ..... 12 FXMQ-MF 337

Part 4 Outdoor Units; Normal Series (Space Saving Series) 371

Cooling Only (50Hz) ..... 13 RXQ-P 373

Part 5 Outdoor Units; High COP Series (Energy Saving Series) 451

Cooling Only (50Hz) ..... 14 RXQ-PH 453

Part 6 Installation of Outdoor Units 15 497

Part 7 Control 16 559

Part 8 Guide Specification 17 739

1. Introduction

Preface

Along higher quality building environment and more sophisticated building function, there is now a greater demand for system expansion for a flexible air-conditioning system capable of finer air-conditioning, thus increasing importance of individual air-conditioning systems. On the other hand, due to social significance of environmental and energy problems, elements such as energy-efficiency and low maintenance are still strongly desired.

Daikin is the sole air conditioning company in the world that manufactures every component from refrigerant to complete air conditioning systems itself. Our commitment to offering the best for people as well as the environment inspires us to develop new systems that make the most effective use of energy resources.
Daikin, the first in the industry to develop the VRV system, has now enhanced the R-410A, R-22 with the Inverter that features an upgraded capacity of up to 54 horsepower (R-22 : 48 horsepower), VRV system to further refine all the features of the current VRV system.

This publication contains a variety of information related to the design and installation of this new VRV System. We hope this information will serve to deepen your understanding of the system, and will help you to efficiently develop its highly evolved characteristics.

DAIKIN INDUSTRIES, LTD
Global Operations Division

2. Publication History of VRV Engineering Data

Refrigerant	Type		Pub. : No.	Outdoor Units		Notes	Published In
R-410A	Air Cooled	■ INVERTER **M**	**ED39-436**	**50/60Hz H/P**	RXYMQ4, 5, 6M	**VRV II-S** Heat Pump ■ New line up of 4, 5, 6HP outdoor units ■ New line up of FXDQ Indoor units	Jul. 2004
			ED39-526	**50Hz H/R**	REYQ8M~48M	**VRV II** Heat Recovery Separation of Heat Recovery Series from ED39-226B	Feb. 2006
			ED35-511B	**50/60Hz H/P**	RXYQ8~30MY1K(E) RXYQ8~30MYLK(E)	**VRV II** Heat Pump for High outdoor temperature. ■ Minor change of Indoor Units from M to MA ■ Model change of Remote Controller as follows BRC1A61, 62 BRC8A61 →**BRC1C62**	Jul. 2006
		■ INVERTER **MA**	**ED39-428B**	**50/60Hz H/P** **50Hz C/O**	RXYQ5MA~48MA RXQ5MA~48MA	**VRV II** Heat Pump, Cooling Only ■ New line up of 60Hz Heat Pump outdoor units to ED39-428A	Oct. 2005
		■ INVERTER **P**	**ED34-645B**	**50/60Hz H/P**	Normal Series RXYQ5P~54P High COP Series RXYQ16PH~50PH	**VRV III** Heat Pump ■ Addition of 60Hz Heat Pump to ED34-645A	Nov. 2006
			ED34-762	**50Hz C/O**	Normal Series RXQ5P~54P High COP Series RXQ16PH~50PH	**VRV III** Cooling Only ■ New line up of 50Hz Cooling Only outdoor units.	Dec. 2006
			ED34-762A	**50Hz C/O**	Normal Series RXQ5P~54P High COP Series RXQ16PH~50PH	**VRV III** Cooling Only ■ Correction of errors	Sep.2007
	Water Cooled	■ INVERTER **M**	**ED30-442B**	**50Hz H/P** **50Hz H/R**	RWEYQ10, 20, 30M Y1	**VRV-W II** Heat Pump, Heat Recovery Following change has been newly added to ED30-442A ■ Minor change of Indoor Units from M to MA ■ Model change of Remote Controller as follows BRC1A61, 62 BRC8A61 →**BRC1C62**	May. 2006
			ED30-653	**60Hz H/P** **60Hz H/R**	RWEYQ10, 20, 30M YL, TL	**VRV-W II** Heat Pump, Heat Recovery 60Hz	Apr. 2006
R-22	Air Cooled	■ INVERTER **K-K**	**ED35-211**	**50/60Hz** **50/60Hz**	RXY 16K-K~30K-K RX 16K-K~30K-K	**VRV** Heat Pump, Cooling Only ■ For High Outdoor Temperature up to 50°CDB ■ For Saudi Arabia and Middle East	Nov. 2002
		■ INVERTER **M**	**ED38-225C**	**50/60Hz H/P** **50Hz C/O**	RXY5M~48M RX5M~48M	**VRV II** Heat Pump, Cooling Only Following change has been newly added to ED38-225B ■ FXD20~32P (Additional) ■ Model change of Remote Controller as follows BRC1A61, 62 BRC8A61 →**BRC1C62** ■ VAM150~2000FA→VAM150~2000GJ (Model change)	Jun. 2006
			ED38-329	**50/60Hz H/P** **50Hz C/O**	RXYM4, 5, 6M RXM4, 5, 6M	**VRV II-S** Heat Pump, Cooling Only ■ New line up of 4, 5, 6HP outdoor units ■ New line up of FXD Indoor units	Jan. 2004
For All Types			**OH 06-1**	For Indoor and Outdoor Units.		**Option Handbook**	Jul. 2006
HRV(VAM)	GJ		**ED71-613**	**50/60Hz**	VAM150~2000GJ	**HRV** ■ New line-up from FA to GJ Series	Feb. 2006
HRV(VKM)	G(M)		**ED71-440**	**50Hz**	VKM50~100G(M) (R-410A)	**HRV** • With DX Coil (VKM-G) • With DX Coil and Humidities (VKM-GM)	Mar. 2005

This time we publish **ED34-762A** as shown by .

H/P : Heat Pump
H/R : Heat Recovery
C/O : Cooling Only

Note: The reference number "(V○○○○)" are noted on each figures in this book however they are only used for printing convenience.

3. Step by Step VRV System Selection Process (Reference)

(1)

Obtain the maximum heat load for the area(s) to be conditioned.

(2)

Indoor unit specifications	**P.48, 69, 113, 134, 175, 215, 241, 257, 281, 283, 303**
Outdoor unit specifications	**P.374~, 454~**
Capacity correction factor	**P.436~, 486~**
Air velocity and temperature distributions	**P.313**

(3)

Selection of refrigerant pipes joints & headers	**P.508~**

(4)

Selection of the control system

Control wiring method	**P.562~**
Description of devices	**P.561, 574~**

(5)

Electrical wiring

Electric characteristics	**P.57, 76, 118, 151, 188, 224, 247, 264, 293, 311, 352, 407, 467**
Field wiring	**P.404**

Caution

1. Air conditioners should not be installed in areas where corrosive gases, such as acid gas or alkaline gas, are produced.
2. If the outdoor units is to be installed close to the sea shore, direct exposure to the sea breeze should be avoided.
3. Refer to the latest drawing numbers.

Part 1
General Information

1. Model Names of Indoor/Outdoor Units....2
2. External Appearance....4
   2.1 Indoor Units....4
   2.2 Outdoor Units....5
3. Combination of Outdoor Units....7
4. Nomenclature....9
5. Capacity Range....11
6. Features....13
   6.1 Technologies....13
   6.2 Flexible Design....15
   6.3 A sense of responsibility....18
   6.4 Enhanced Comfort....19
   6.5 Control Systems....20
   6.6 Advanced Control Systems....22
   6.7 HRV (Heat Reclaim Ventilation)....25
   6.8 HRV-With DX Coil-(Heat Reclaim Ventilation) VKM-GA(M) Series....33

1. Model Names of Indoor/Outdoor Units

*Indoor Units

Type		Model Name											Power Supply
Ceiling Mounted Cassette Type (Double Flow)	FXCQ	20M	25M	32M	40M	50M	63M	80M	—	125M	—	—	VE
Ceiling Mounted Cassette Type (Multi Flow)	FXFQ	—	25M	32M	40M	50M	63M	80M	100M	125M	—	—	
Ceiling Mounted Cassette Corner Type	FXKQ	—	25MA	32MA	40MA	—	63MA	—	—	—	—	—	
Slim Ceiling Mounted Duct Type	FXDQ-PVE	20P	25P	32P	—	—	—	—	—	—	—	—	
	FXDQ-PVET	20P	25P	32P	—	—	—	—	—	—	—	—	
	FXDQ-NAVE	20NA	25NA	32NA	40NA	50NA	63NA	—	—	—	—	—	
	FXDQ-NVET	20N	25N	32N	40N	50N	63N	—	—	—	—	—	
Ceiling Mounted Built-In Type	FXSQ	20M	25M	32M	40M	50M	63M	80M	100M	125M	—	—	
Ceiling Mounted Duct Type	FXMQ	—	—	—	40MA	50MA	63MA	80MA	100MA	125MA	200MA	250MA	
Ceiling Suspended Type	FXHQ	—	—	32MA	—	—	63MA	—	100MA	—	—	—	
Wall Mounted Type	FXAQ	20MA	25MA	32MA	40MA	50MA	63MA	—	—	—	—	—	
Floor Standing Type	FXLQ	20MA	25MA	32MA	40MA	50MA	63MA	—	—	—	—	—	
Concealed Floor Standing Type	FXNQ	20MA	25MA	32MA	40MA	50MA	63MA	—	—	—	—	—	
Ceiling Suspended Cassette Type	FXUQ	—	—	—	—	—	—	71MA	100MA	125MA	—	—	V1
Connection Unit for FXUQ	BEVQ	—	—	—	—	—	—	71MA	100MA	125MA	—	—	VE

Note: FXDQ has following 2 Series, as shown below.
FXDQ-P, N(A)VET: without Drain Pump (For General, Asia: except for EU, China and Australia)
FXDQ-P, N(A)VE: with Drain Pump
BEV unit is required for FXUQ only.
MA, NA: RoHS Directive models; Specifications, Dimensions and other functions are not changed compared with M, N type.

Outdoor Units

Normal Series (Space Saving Series)

Series	Model Name										Power Supply
Cooling Only	RXQ	5P	8P	10P	12P	14P	16P	18P	20P	22P	Y1
		24P	26P	28P	30P	32P	34P	36P	38P	40P	
		42P	44P	46P	48P	50P	52P	54P			

High COP Series (Energy Saving Series)

Series	Model Name										Power Supply
Cooling Only	RXQ	16PH	18PH	24PH	26PH	28PH	30PH	32PH	34PH	36PH	Y1
		38PH	40PH	42PH	44PH	46PH	48PH	50PH			

VE: 1ϕ, 220~240V, 50Hz V1: 1ϕ, 220~240V, 50Hz Y1: 3ϕ, 380~415V, 50Hz

Combination of Outdoor Units (Normal Series (Space Saving Series))

HP	5HP	8HP	10HP	12HP	14HP	16HP	18HP
Model name	**RXQ5P**	**RXQ8P**	**RXQ10P**	**RXQ12P**	**RXQ14P**	**RXQ16P**	**RXQ18P**

HP	20HP	22HP	24HP	26HP	28HP	30HP	32HP
Model name	**RXQ20P**	**RXQ22P**	**RXQ24P**	**RXQ26P**	**RXQ28P**	**RXQ30P**	**RXQ32P**
Outdoor unit 1	RXQ8P	RXQ10P	RXQ8P	RXQ8P	RXQ10P	RXQ12P	RXQ16P
Outdoor unit 2	RXQ12P	RXQ12P	RXQ16P	RXQ18P	RXQ18P	RXQ18P	RXQ16P
Outdoor unit 3	–	–	–	–	–	–	–

HP	34HP	36HP	38HP	40HP	42HP	44HP	46HP
Model name	**RXQ34P**	**RXQ36P**	**RXQ38P**	**RXQ40P**	**RXQ42P**	**RXQ44P**	**RXQ46P**
Outdoor unit 1	RXQ16P	RXQ18P	RXQ8P	RXQ8P	RXQ8P	RXQ8P	RXQ10P
Outdoor unit 2	RXQ18P	RXQ18P	RXQ12P	RXQ16P	RXQ16P	RXQ18P	RXQ18P
Outdoor unit 3	–	–	RXQ18P	RXQ16P	RXQ18P	RXQ18P	RXQ18P

HP	48HP	50HP	52HP	54HP
Model name	**RXQ48P**	**RXQ50P**	**RXQ52P**	**RXQ54P**
Outdoor unit 1	RXQ12P	RXQ14P	RXQ16P	RXQ18P
Outdoor unit 2	RXQ18P	RXQ18P	RXQ18P	RXQ18P
Outdoor unit 3	RXQ18P	RXQ18P	RXQ18P	RXQ18P

Combination of Outdoor Units (High COP Series (Energy Saving Series))

HP	16HP	18HP	24HP	26HP	28HP	30HP	32HP
Model name	**RXQ16PH**	**RXQ18PH**	**RXQ24PH**	**RXQ26PH**	**RXQ28PH**	**RXQ30PH**	**RXQ32PH**
Outdoor unit 1	RXQ8P	RXQ8P	RXQ8P	RXQ8P	RXQ8P	RXQ8P	RXQ8P
Outdoor unit 2	RXQ8P	RXQ10P	RXQ8P	RXQ8P	RXQ8P	RXQ10P	RXQ12P
Outdoor unit 3	–	–	RXQ8P	RXQ10P	RXQ12P	RXQ12P	RXQ12P

HP	34HP	36HP	38HP	40HP	42HP	44HP	46HP
Model name	**RXQ34PH**	**RXQ36PH**	**RXQ38PH**	**RXQ40PH**	**RXQ42PH**	**RXQ44PH**	**RXQ46PH**
Outdoor unit 1	RXQ10P	RXQ12P	RXQ12P	RXQ12P	RXQ12P	RXQ12P	RXQ12P
Outdoor unit 2	RXQ12P	RXQ12P	RXQ12P	RXQ12P	RXQ12P	RXQ16P	RXQ16P
Outdoor unit 3	RXQ12P	RXQ12P	RXQ14P	RXQ16P	RXQ18P	RXQ16P	RXQ18P

HP	48HP	50HP
Model name	**RXYQ48PH**	**RXYQ50PH**
Outdoor unit 1	RXQ16P	RXQ16P
Outdoor unit 2	RXQ16P	RXQ16P
Outdoor unit 3	RXQ16P	RXQ18P

2. External Appearance

2.1 Indoor Units

Ceiling Mounted Cassette Type (Double Flow) FXCQ20M FXCQ25M FXCQ32M FXCQ40M FXCQ50M FXCQ63M FXCQ80M FXCQ125M 	Ceiling Suspended Type FXHQ32MA FXHQ63MA FXHQ100MA 
Ceiling Mounted Cassette Type (Multi Flow) FXFQ25M FXFQ32M FXFQ40M FXFQ50M FXFQ63M FXFQ80M FXFQ100M FXFQ125M 	Wall Mounted Type FXAQ20MA FXAQ25MA FXAQ32MA FXAQ40MA FXAQ50MA FXAQ63MA 
Ceiling Mounted Cassette Corner Type FXKQ25MA FXKQ32MA FXKQ40MA FXKQ63MA 	Floor Standing Type FXLQ20MA FXLQ25MA FXLQ32MA FXLQ40MA FXLQ50MA FXLQ63MA 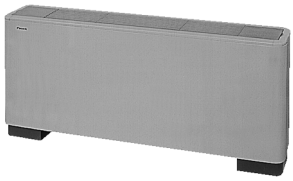
Slim Ceiling Mounted Duct Type FXDQ20P FXDQ20N(A) FXDQ25P FXDQ25N(A) FXDQ32P FXDQ32N(A) FXDQ40N(A) FXDQ50N(A) FXDQ63N(A) with Drain Pump (VE) without Drain Pump (VET) 	Concealed Floor Standing Type FXNQ20MA FXNQ25MA FXNQ32MA FXNQ40MA FXNQ50MA FXNQ63MA 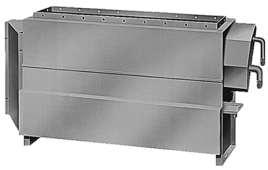
Ceiling Mounted Built-In Type FXSQ20M FXSQ25M FXSQ32M FXSQ40M FXSQ50M FXSQ63M FXSQ80M FXSQ100M FXSQ125M 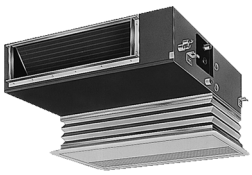	Ceiling Suspended Cassette Type (Connection Unit Series) FXUQ71MA + BEVQ71MA FXUQ100MA + BEVQ100MA FXUQ125MA + BEVQ125MA Connection Unit 
Ceiling Mounted Duct Type FXMQ40MA FXMQ50MA FXMQ63MA FXMQ80MA FXMQ100MA FXMQ125MA FXMQ200MA FXMQ250MA  FXMQ40~125MA  FXMQ200 · 250MA	

2.2 Outdoor Units

Normal Series (Space Saving Series)

RXQ5P	RXQ8P, 10P	RXQ12P, 14P, 16P, 18P
 5HP	 8, 10HP	 12, 14, 16, 18HP

RXQ20P, 22P, 24P, 26P, 28P	RXQ30P, 32P, 34P, 36P
 20, 22, 24, 26, 28HP	 30, 32, 34, 36HP

RXQ38P, 40P, 42P, 44P, 46P	RXQ48P, 50P, 52P, 54P
 38, 40, 42, 44, 46HP	 48, 50, 52, 54HP

High COP Series (Energy Saving Series)

RXQ16PH, 18PH	RXQ24PH, 26PH
 16, 18HP	 24, 26HP
RXQ28PH, 30PH	**RXQ32PH, 34PH**
 28, 30HP	 32, 34HP
RXQ36PH, 38PH, 40PH, 42PH, 44PH, 46PH, 48PH, 50PH	
 36, 38, 40, 42, 44, 46, 48, 50HP	

3. Combination of Outdoor Units

Normal Series (Space Saving Series)

System Capacity	Number of units	Module							Outdoor Unit Multi Connection Piping Kit (Option)
		5	8	10	12	14	16	18	
5HP	1	●							—
8HP	1		●						
10HP	1			●					
12HP	1				●				
14HP	1					●			
16HP	1						●		
18HP	1							●	
20HP	2		●		●				BHFP22P100
22HP	2			●	●				
24HP	2		●				●		
26HP	2		●					●	
28HP	2			●				●	
30HP	2				●			●	
32HP	2						●●		
34HP	2						●	●	
36HP	2							●●	
38HP	3		●		●			●	BHFP22P151
40HP	3		●				●●		
42HP	3		●				●	●	
44HP	3		●					●●	
46HP	3			●				●●	
48HP	3				●			●●	
50HP	3					●		●●	
52HP	3						●	●●	
54HP	3							●●●	

★Note: For multiple connection of 20HP system or more, an optional Daikin Outdoor Unit Multi Connection Piping Kit is required.

High COP Series (Energy Saving Series)

System Capacity	Number of units	Module						Outdoor Unit Multi Connection Piping Kit (Option)
		8	10	12	14	16	18	
16HP	2	●●						BHFP22P100
18HP	2	●	●					
24HP	3	●●●						BHFP22P151
26HP	3	●●	●					
28HP	3	●●		●				
30HP	3	●	●	●				
32HP	3	●		●●				
34HP	3		●	●●				
36HP	3			●●●				
38HP	3			●●	●			
40HP	3			●●		●		
42HP	3			●●			●	
44HP	3			●		●●		
46HP	3			●		●	●	
48HP	3					●●●		
50HP	3					●●	●	

★Note: For multiple connection of 16HP system or more, an optional Daikin Outdoor Unit Multi Connection Piping Kit is required.

4. Nomenclature

Indoor Unit

FX C Q 40 M VE

Power Supply Symbol
VE : Single Phase 220 to 240V, 50Hz : 220V, 60Hz
V1 : Single Phase 220 to 240V, 50Hz

Indicates Major Design Category
M : Standard
MA : Standard (RoHS Applied Models)
N : Standard
NA : Standard (RoHS Applied Models)

Capacity Indication
Conversion to Horsepower:

20 : 0.8 HP	50 : 2.0 HP	125 : 5 HP
25 : 1 HP	63 : 2.5 HP	200 : 8 HP
32 : 1.25 HP	80 : 3.2 HP	250 : 10 HP
40 : 1.6 HP	100 : 4 HP	

Refrigerant : R-410A

Type of Unit
C : Ceiling Mounted Cassette Type (Double Flow)
F : Ceiling Mounted Cassette Type (Multi Flow)
D : Slim Ceiling Mounted Duct Type
K : Ceiling Mounted Cassette Corner Type
U : Ceiling Suspended Cassette Type
S : Ceiling Mounted Built-In Type
M : Ceiling Mounted Duct Type
H : Ceiling Suspended Type
A : Wall Mounted Type
L : Floor Standing Type
N : Concealed Floor Standing Type

Indicates that this is VRV system indoor unit.

(V2286)

Connection Unit

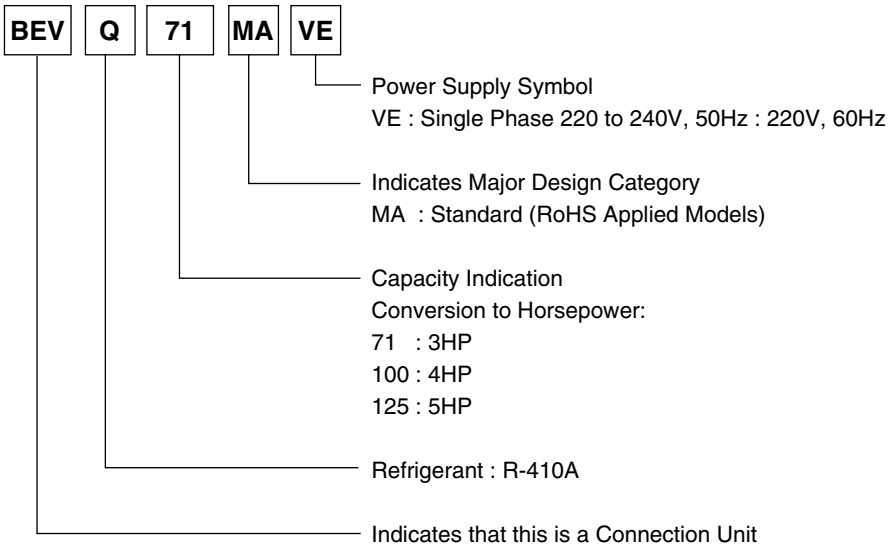

(V2864)

Outdoor Unit

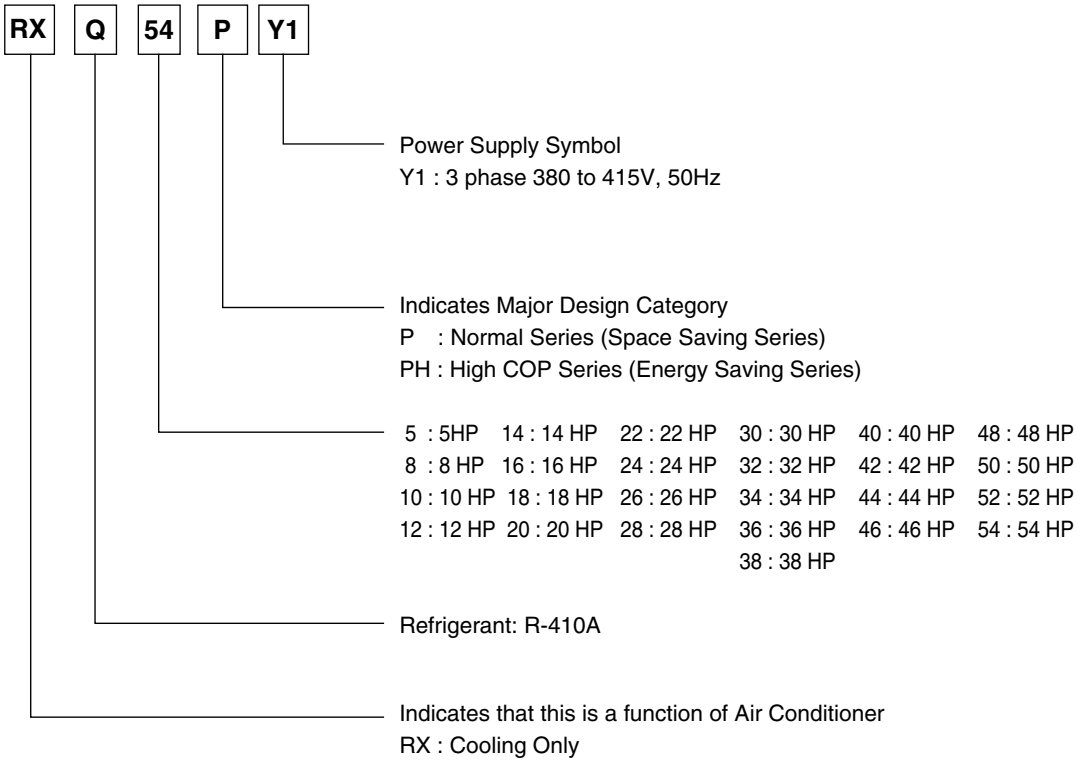

(V2288)

5. Capacity Range

Outdoor Units

Normal type

Outdoor unit			Types of connected indoor units						
Type	HP	Capacity index	Min. Combination ratio (%)	FXDQ, FXSQ, FXAQ		FXCQ, FXFQ32-125, FXZQ, FXKQ, FXDQ, FXSQ, FXMQ, FXHQ, FXAQ, FXLQ, FXNQ (All Types except for FXFQ25.)		The case which includes FXFQ25	
				Max. Combination ratio (%)	Max. Number of connecable indoor units	Max. Combination ratio (%)	Max. Number of connecable indoor units	Max. Combination ratio (%)	Max. Number of connecable indoor units
Single outdoor units	5	125	50	200	12	200	12	130	8
	8	200			20		20		13
	10	250			25		25		16
	12	300			30		30		19
	14	350			35		35		22
	16	400			40		40		26
	18	450			45		45		29
Double outdoor units	20	500			50	160	40		32
	22	550			55		44		35
	24	600			60		48		39
	26	650			64		52		42
	28	700					56		45
	30	750					60		48
	32	800					64		52
	34	850					64		55
	36	900					64		58
Triple outdoor units	38	950				130	61		61
	40	1000					64		64
	42	1050							
	44	1100							
	46	1150							
	48	1200							
	50	1250							
	52	1300							
	54	1350							

High COP type

Outdoor unit			Types of connected indoor units						
Type	HP	Capacity index	Min. Combination ratio of index (%)	FXDQ, FXSQ, FXAQ		FXCQ, FXFQ32-125, FXZQ, FXKQ, FXDQ, FXSQ, FXMQ, FXHQ, FXAQ, FXLQ, FXNQ (All Types except for FXFQ25.)		The case which includes FXFQ25	
				Max. Combination ratio (%)	Max. Number of connecable indoor units	Max. Combination ratio (%)	Max. Number of connecable indoor units	Max. Combination ratio (%)	Max. Number of connecable indoor units
Doble outdoor units	16	400	50	200	40	160	32	130	26
	18	450			45		36		29
Triple outdoor units	24	600			60	130	39		39
	26	650			64		42		42
	28	700					45		45
	30	750					48		48
	32	800					52		52
	34	850					55		55
	36	900					58		58
	38	950					61		61
	40	1000					64		64
	42	1050							
	44	1100							
	46	1150							
	48	1200							
	50	1250							

Indoor Units

Capacity Range		0.8HP	1HP	1.25HP	1.6HP	2HP	2.5HP	3.2HP	4HP	5HP	8HP	10HP
Capacity Index		20	25	31.25	40	50	62.5	80	100	125	200	250
Ceiling Mounted Cassette Type (Double Flow)	FXCQ	20M	25M	32M	40M	50M	63M	80M	—	125M	—	—
Ceiling Mounted Cassette Type (Multi Flow)	FXFQ	—	25M	32M	40M	50M	63M	80M	100M	125M	—	—
Ceiling Mounted Cassette Corner Type	FXKQ	—	25MA	32MA	40MA	—	63MA	—	—	—	—	—
Slim Ceiling Mounted Duct Type	FXDQ-PVE	20P	25P	32P	—	—	—	—	—	—	—	—
	FXDQ-PVET	20P	25P	32P	—	—	—	—	—	—	—	—
	FXDQ-NAVE	20NA	25NA	32NA	40NA	50NA	63NA	—	—	—	—	—
	FXDQ-NVET	20N	25N	32N	40N	50N	63N	—	—	—	—	—
Ceiling Mounted Built-In Type	FXSQ	20M	25M	32M	40M	50M	63M	80M	100M	125M	—	—
Ceiling Mounted Duct Type	FXMQ	—	—	—	40MA	50MA	63MA	80MA	100MA	125MA	200MA	250MA
Ceiling Suspended Type	FXHQ	—	—	32MA	—	—	63MA	—	100MA	—	—	—
Wall Mounted Type	FXAQ	20MA	25MA	32MA	40MA	50MA	63MA	—	—	—	—	—
Floor Standing Type	FXLQ	20MA	25MA	32MA	40MA	50MA	63MA	—	—	—	—	—
Concealed Floor Standing Type	FXNQ	20MA	25MA	32MA	40MA	50MA	63MA	—	—	—	—	—
Ceiling Suspended Cassette Type	FXUQ	—	—	—	—	—	—	71MA	100MA	125MA	—	—

Note: FXDQ has following 2 Series, as shown below.
FXDQ-P, NVET: without Drain Pump (For General, Asia: except for EU, China and Australia)
FXDQ-P, NAVE: with Drain Pump

6. Features

6.1 Technologies

VRV III—Created to respond to the needs of large-sized buildings

Daikin's constant efforts have been devoted towards using the latest and most revolutionary technologies in the development of the VRVIII system for large-sized buildings. The system offers larger outdoor capacities, greater energy savings, easier installation, longer actual and total piping, and more.

New

1 Newly improved fans and grilles

A higher external static pressure has been achieved–from 58. 8 Pa to 78.4 Pa–thanks to reduced internal pressure loss, use of the new fans and the new grilles.

New aero spiral fan and aero asymmetrical fan

The area of these new fan blades has been increased and optimized for each casing. This greatly reduces pressure loss, resulting in a higher external static pressure.

New aero asymmetrical fan

The three-bladed fan on the 10 HP unit, with a diameter of 700 mm, has been redesigned to include four blades and now has a diameter of 680 mm. Blade area has been increased by 25%.

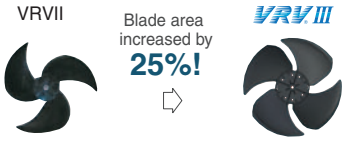

New aero spiral fan (Powerful Dual DC fan)

In the 14 and 16 HP unit, a single fan with a diameter of 700 mm has been split into two fans with diameters of 540 mm each. Blade area has been increased by 20% to increase airflow.

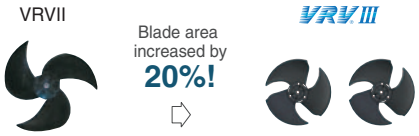

Diameter of **700 mm** Diameter of **540 mm x 2**

Aero smooth grille

The three-dimensional, integrated, soft woven steel grilles are covered with a plastic coating that protects them from rotating elements and the possibility of fire damage.

Perspective view

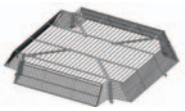

New

2 Heat exchanger

The new heat exchanger contributes to a higher COP because of an increase from 7% to 10% of the effective length as well as an optimized e-Pass heat exchanger.

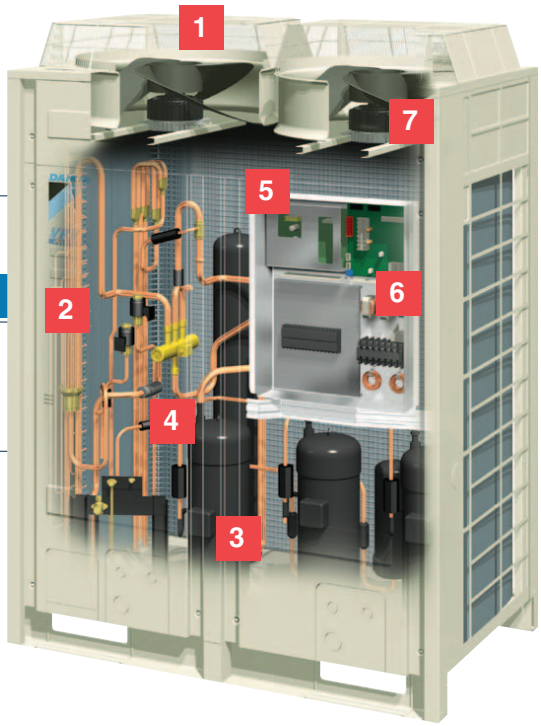

3 Improving the high efficiency compressor to achieve a higher COP and larger capacity

Reluctance DC scroll compressor

Daikin's unique scroll compressor minimizes heat loss, and is driven by a high efficiency motor to achieve significant energy savings.

High torque and efficiency is attained by employing neodymium magnets. Achieves 70% reduction in volume.

Secret to raising energy-efficiency!
Powerful magnets

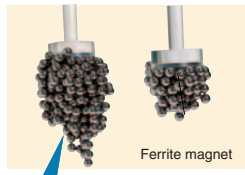

Neodymium magnets are much more powerful than the widely used ferrite magnets.

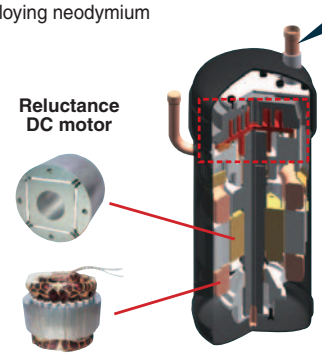

New

High-performance, low-noise new scroll compressor operates at a faster rate. The speed increase has been achieved through advanced stress analysis for increased strength and utilization of the advantages (oil film control) of the high thrust mechanism*.

***High thrust mechanism**

By introducing high pressure oil, the reactive force from the fixed scroll is added to the internal force, thereby reducing thrust losses. This results in improved efficiency and suppressed sound levels.

4 Heat transfer circuit

By performing super cooling before the expansion process, the volume of refrigerant that needs to be circulated to the indoor units can be reduced without lowering the evaporation temperature. This permits the use of narrower piping.

5 Compact aero box

Realizes a compact casing by stacking the Inverter and control PC boards plus optimizing the internal design to suit airflow speed. This achieves lower noise and reduces the power required by the large-diameter fanned outdoor unit.

6 Smooth sine wave DC Inverter

By adoption of the Sine Wave which smoothes rotation of motor, operation efficiency is improved sharply.

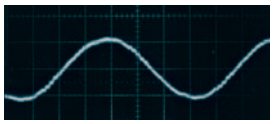

7 DC fan motor

- Across entire range of models (from 5 to 54 HP).
- Efficiency improvement by 40% especially in low speed.

DC fan motor structure

DC motor efficiency
(comparison with a conventional AC motor)

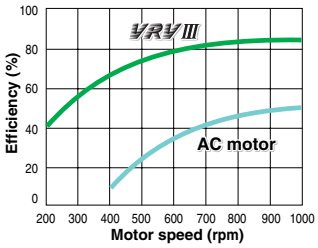

6.2 Flexible Design

Large capacities for large-sized buildings

New

An increased number of connectable indoor units

The number of connectable indoor units has been drastically increased from 40 to 64!

Increased indoor unit connections

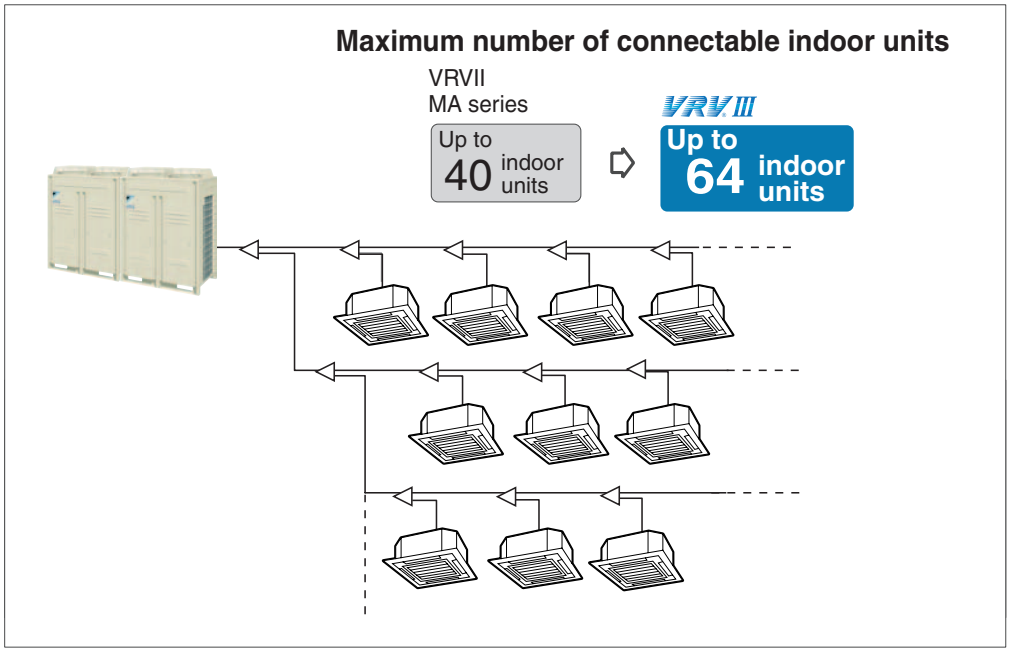

New

Combination ratio

Connection capacity at maximum is 200%.

Connection capacity
50%—200%

Conditions of indoor unit connection capacity

Applicable indoor units	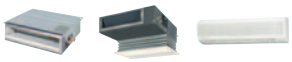 FXDQ, FXSQ, FXAQ models	Other indoor unit models*
Single outdoor units	200%	200%
Double outdoor units		160%
Triple outdoor units		130%

* For the FXFQ25 models, maximum connection ratio is 130% for the entire range of outdoor units.

Notes: • If the operational capacity of indoor units is more than 130%, low airflow operation is enforced in all the indoor units.

Large capacities for large-sized buildings

New

Extended long piping length

Piping length is drastically extended! The long piping length provides more design flexibility, which can match even large-sized buildings.

Standard system

	VRVII MA series	VRV III
Max. actual piping length	150 m	165 m
Max. equivalent piping length	175 m	190 m
Total piping length	510 m	1000 m
Level difference between the outdoor units and the indoor units	50 m *2	90 m *3 (RXQ8P-54P) 50 m *2 (RXQ5P)

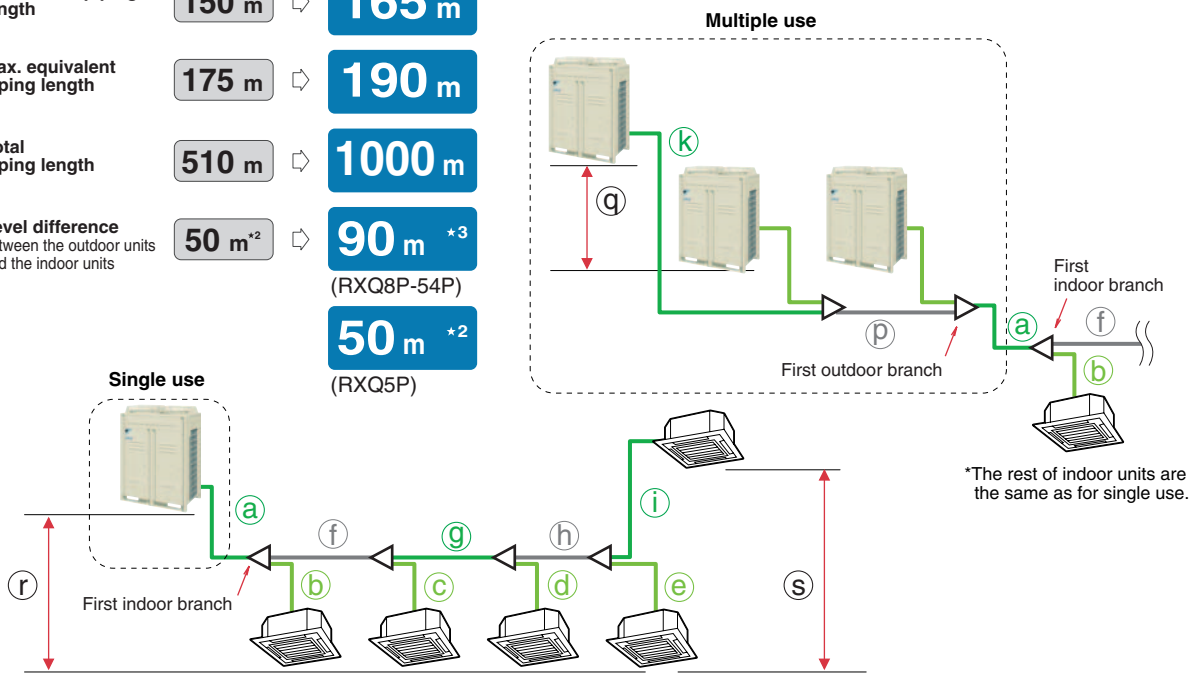

Colors in the diagram above are merely for identifying pipes referenced with symbols such as ⓐ.

		Actual piping length	Example	Equivalent piping length
Maximum allowable piping length	Refrigerant piping length	**165** m or less	a+f+g+h+i	**190** m or less
	Total extension length	**1000** m or less	a+b+c+d+e+f+g+h+i	—
	Between the first indoor branch and the farthest indoor unit	**90** m or less*1	f+g+h+i	—
	Between the outdoor branch and the last outdoor unit	**10** m or less	k+p	**13** m or less

			Level Difference	Example	Outdoor Units
Maximum allowable level difference	Between the outdoor units (Multiple use)		**5** m or less	q	RXQ8P-54P
	Between the indoor units		**15** m or less	s	—
	Between the outdoor units and the indoor units	If the outdoor unit is above.	*3 Available on request **90** m or less	r	RXQ8P-54P
		If the outdoor unit is below.	**90** m or less	r	
		If the outdoor unit is above.	**50** m or less	r	RXQ5P
		If the outdoor unit is below.	**40** m or less	r	

*1. No special requirements up to 40 m. The maximum actual piping length can be 90 m, or less depending on conditions. Various conditions and requirements have to be met to allow utilization of 90 m piping length. Be sure to refer to the Engineering Data (P528 Note2) for details of these conditions and requirements.
*2. 40 m or less if the outdoor unit is below.
*3. Available on request if the difference in level is between 50 m and 90 m (if the outdoor unit is above) .

Large capacities for large-sized buildings

New

High external static pressure 78.4 Pa (8 mm H_2O)

Higher external static pressure has been achieved thanks to the fan grilles and the dual DC fans that reduce internal pressure loss. Exceeding the previous 58.8 Pa (6 mm H_2O) level, Daikin now offers 78.4 Pa (8 mm H_2O) external static pressure by field setting to meet the requirements for installation on each floor, often requested for large-sized buildings.

Approx.
33.3%
increase!

VRVII MA series **58.8 Pa** ⇨ VRV III **78.4 Pa**

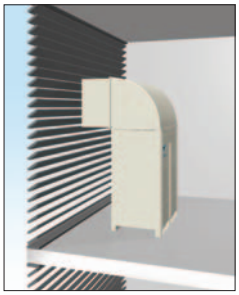

Easier installation and maintenance

New

Automatic test operation

Simply press the test operation button and the unit performs an automatic system check, including wiring, shutoff valves, sensors, and refrigerant volume. The results are returned automatically after the check finishes.

New

Memory function for operational data

Operating data for the preceding 3 minutes is automatically stored in memory. Should a malfunction occur, this speeds up the process of identifying and fixing the cause of the problem. It also helps in developing measures to eliminate malfunctions.

6.3 A sense of responsibility

New High COPs

It has become essential for air conditioning manufacturers to develop systems that provide high energy savings. We at Daikin have made great efforts in this field, and the newly-developed VRVIII delivers highly efficient performance, contributing to high energy savings.

Achieving a higher COP

We have reached a new level of efficiency, thanks to the new advanced features such as the heat exchanger, the grille and the dual DC fans.

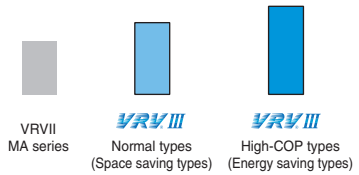

Comparison of VRVII and VRVIII
(Average values of cooling and heating operations)

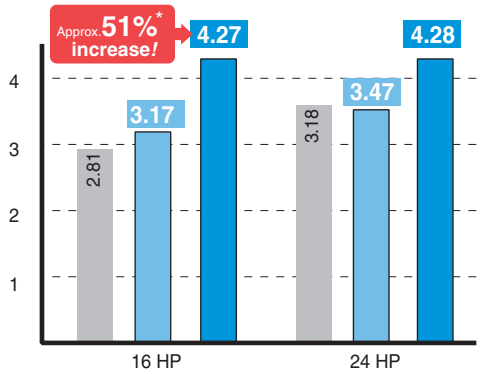

* Compared to VRV II MA series

•Value represents that to be achieved by a single outdoor unit.
•Cooling operating conditions: Indoor temp. of 27 CDB, 19.0 CWB, and outdoor temp. of 35 CDB.
•Heating operating conditions: Indoor temp. of 20 CDB, and outdoor temp. of 7 CDB, 6 CWB.

New Compliant with the RoHS Directive*

We have been making efforts to facilitate the transition to using RoHS Directive*-compliant materials for system parts.

* RoHS Directive
The RoHS (Restriction of Hazardous Substances (in electrical and electronic equipment)) Directive is an environmental directive enacted to regulate the use of designated chemical substances (lead, cadmium, hexavalent chromium, mercury, polybrominated biphenyls and polybrominated diphenylether) in electrical equipment. All household products subject to this Directive and sold in Europe from July 1, 2006 are legally bound to comply with the RoHS Directive.

New Less chances of refrigerant leakage

Conventionally, shutoff valve connections are flanged or flared. In the VRVIII system, the connections for all outdoor units are brazed, meaning less chance of refrigerant leakage.

6.4 Enhanced Comfort

Enhanced comfort

New

Outdoor units designed for low-sound operation

Outdoor units created with cutting-edge technologies provide quiet operation to increase users' comfort.

New

Efficient compressor

New high-performance, low-noise scroll compressor operates at a faster rate, reducing start-up time. This helps the unit to bring the room temperature up to the set level quickly.

Nighttime quiet operation function

Operation sound level selectable from 3 steps for the night mode

New

Mode 1. Automatic mode

Set on the outdoor PCB. Time of maximum temperature is memorised. The low operating mode will become active 8 hours*2 after the peak temperature in the daytime, and operation will return to normal 10 hours*3 after that. The operation sound level for the night mode can be selected from 55 dB (Step 1), 50 dB (Step 2) and 45 dB (Step 3). (For a single outdoor unit.)

Mode 2. Manual mode

Starting time and ending time can be input. (External control adaptor for outdoor unit, DTA104A61 or DTA104A62, and a subsequently obtained timer are necessary.)

Mode 3. Combined mode

Combination of mode 1 and 2 can be used depending on your needs.

*1. Determine which mode to select depending on the climatic characteristics of each country.
*2. Initial setting. Can be selected from 6, 8 and 10 hours.
*3. Initial setting. Can be selected from 8, 9 and 10 hours.

Mode 1. Automatic mode

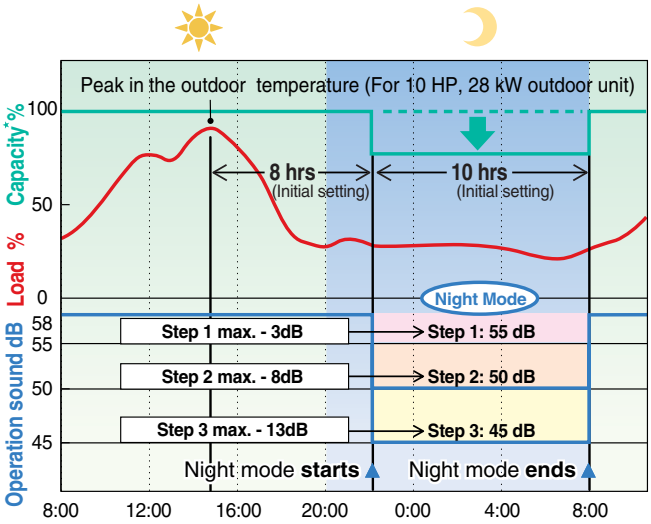

Note: • This function is available in setting at site.
• The relationship of outdoor temperature (load) and time shown in the graph is just an example.

* The capacity reduction rate differs depending on the operation sound level step selected.

6.5 Control Systems

Individual Control Systems

Wired remote controller (Optional)

BRC1C62

- Easier to read because LCD screen is larger.
- Digital display lets you set temperature in 1˚C units.
- Lets you individually program by timer the respective times for operation start and stop within a maximum of 72 hours.
- Equipped with a thermostat sensor in the remote controller that makes possible more comfortable room temperature control.
- Enables you to select cool/heat/fan operation mode with the indoor remote controller of your choice without using the cool/heat selector.
- Constantly monitors malfunctions in the system for 80 items, and is equipped with a "self-diagnosis function" that lets you know by message immediately when a malfunction occurs.
- Lets you carry out various field settings by remote controller.
- Enables you to select the ventilation mode and the volume of the HRV.
- The rubber switch and the oil-resisting resin casing have been adopted for durability.

* When the auto-swing function is not available, the message, THIS FUNCTION IS NOT AVAILABLE is displayed when the wind direction adjustment button is pressed.

The wired remote controller supports a wide range of control functions

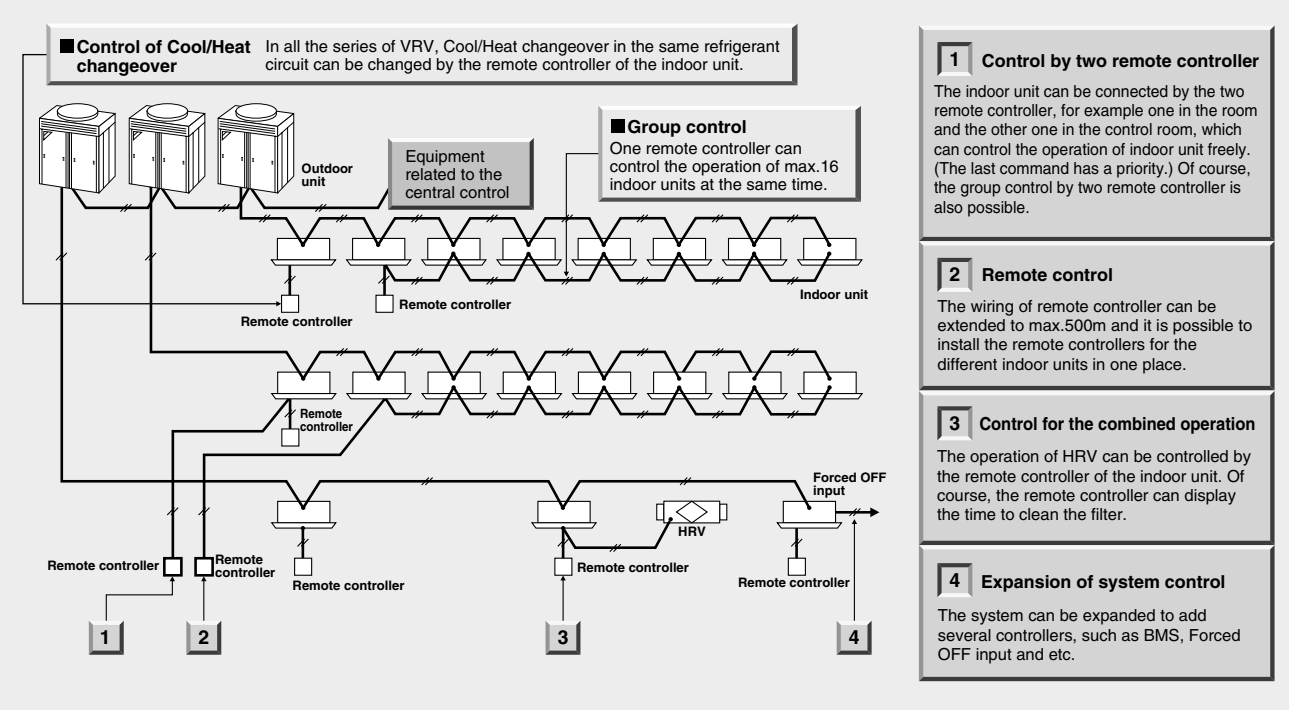

Wired remote Controller with weekly schedule timer (Optional)

BRC1D61

Adds new, advanced functions to those of the above wired remote controller.

- Includes ventilation mode and airflow rate switching, the main functions of HRV series.
- 24-hour clock function (1-hour backup for power failures)
- Programming function for each day of week.
- Scheduling possible of start/stop and temperature limit (5 settings/day)
- Programming can be enabled or disabled.
- Copy function for programmed schedules.

Notes: 1. Standard remote controllers (BRC1C62) not required.
2. If the BRC1D61 is connected to the centralized remote controllers (DCS302CA61, DCS301BA61, DST301BA61), the schedule function is not available.

Wireless remote controller (Optional)

Wireless remote controller

Signal receiver unit
(Separate type)

- The same operation modes and settings as with wired remote controllers are possible.
- A compact light receiving unit to be mounted into a wall or ceiling is included.
  - A light receiving unit for a ceiling-mounted cassette (double-flow, multi-flow) type, ceiling-suspended type and wall-mounted type is mounted into the indoor unit.

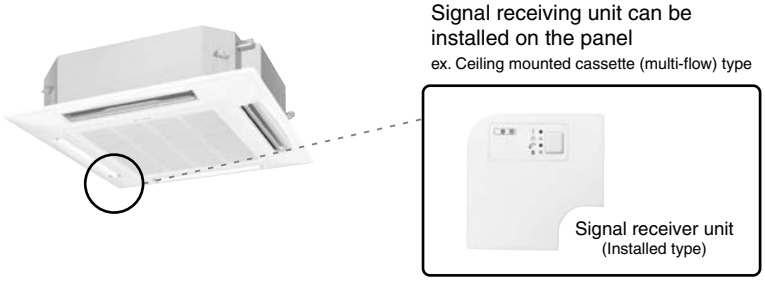

Simple remote controller (Optional)

Exposed type
BRC2C51

Concealed type
(For hotel use)
(BRC3A61)

- The remote controller has centralized its frequently used operation selectors and switches (on/off, operation mode, temperature setting and airflow volume), making itself suitable for use in hotel rooms or conference rooms.
- The exposed type remote controller is fitted with a thermostat sensor.

The concealed-type remote controller smartly fits into a night table or console panel in a hotel room.

Wide variation of remote controllers for indoor units

	FXCQ	FXFQ	FXKQ	FXDQ	FXSQ	FXMQ	FXHQ	FXAQ	FXL(N)Q	FXUQ
Wired remote controller	●	●	●	●	●	●	●	●	●	●
Wired remote controller with weekly shedule timer	●	●	●	●	●	●	●	●	●	●
Wireless remote controller (Installed signal receiver unit)	●	●					●	●		●
Wireless remote controller (Separate type signal receiver unit)			●	●	●	●			●	
Simple remote controller (Exposed type)				●	●	●			●	
Simple remote controller (Concealed type: for Hotel use)				●	●	●			●	

6.6 Advanced Control Systems

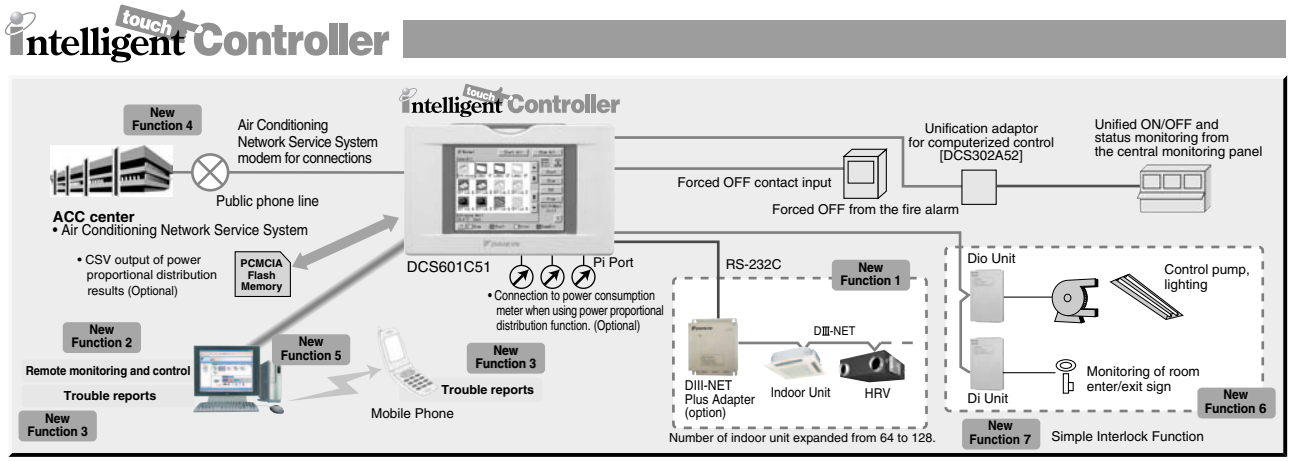

New communication functions in the user-friendly icon-based multilingual controller simplify centralized control of the VRV system.

- Color LCD touch panel icon display
- Small manageable size
- Simplified engineering
- Multi language (English, French, Italian, German, Spanish and Chinese)
- Yearly schedule
- P.P.D. (Power Proportinal Distribution function) (Optional)
- Auto heat/cool change-over
- Temperature limitation
- History of 500 actions
- Air Conditioning Network Service System (Optional Maintenance Service)
- Simple Interlock Function

New Functions

New Function 1	**Doubling of number of control points by adding a DIII-NET Plus Adapter** (Optional)
New Function 2	**Support for centralized control from elsewhere using a PC with a Web browser** (Optional)
New Function 3	**Sending of e-mail alerts to a specified address when malfunctions occur** (Optional)
New Function 4	**Built-in modem for connecting to Airnet Service System** (Optional)
New Function 5	**Built-in Ethernet port for connecting to the Internet or an intranet**
New Function 6	**Management of facilities / equipment other than A/C units**(Compatible with Dio unit and Di unit)
New Function 7	**Simple Interlock Function**

Interface for BACnet® and LONWORKS®

Integrated control systems that recognise the trend of open control systems

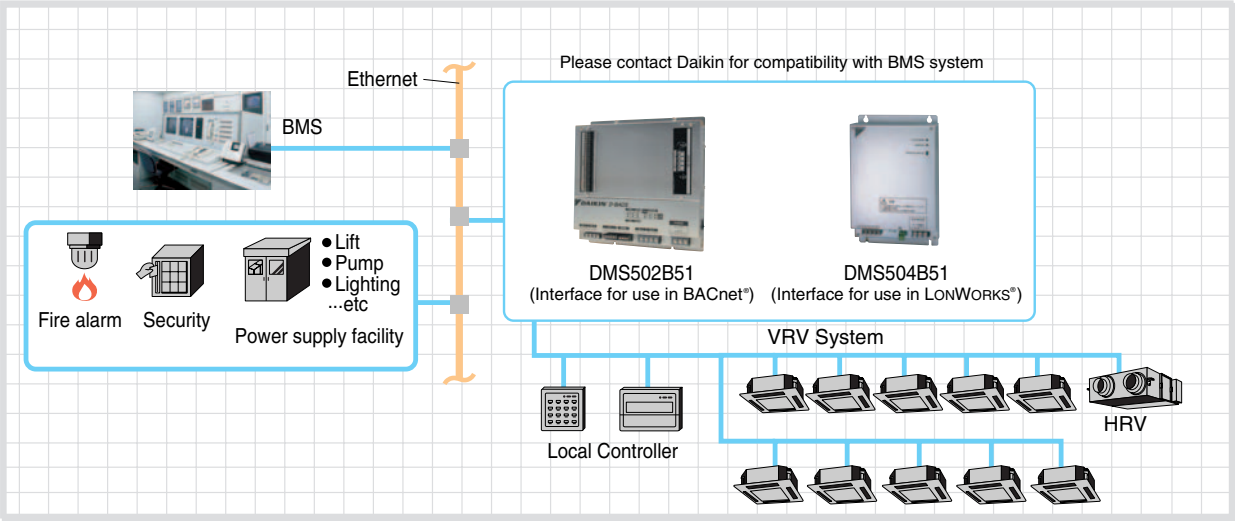

■ Compatibility with BMS enhanced by utilising the international communication standards, BACnet® or LONWORKS®.

DMS504B51 Interface for use in LONWORKS®

■ XIF file for confirming of specifications of the units.

■ Connectable up to 10 outdoor units and 64 indoor unit groups.

New DMS502B51 Interface for use in BACnet®

■ Conformance class 3 (ASHRAE 135–1995)

■ Standard BACnet® Device B-ASC (ASHRAE 135–2001)

■ PPD data (Optional Di board is required.)

■ ISO 16484-5 (Does not support IEEE 802.3 protocol for BACnet®)

■ Compliant with the RoHS Directive (refer to page 18 for details.)

■ Up to 40 outdoor units and 256 indoor unit groups on one gateway. (optional adapter)

Air Conditioning Network Service System

Maintenance services that boost profits and customer satisfaction

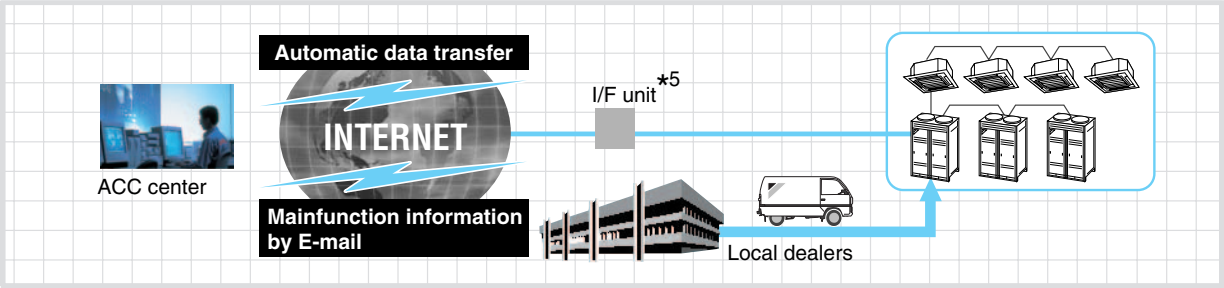

- 24 hour on-line diagnostic system
- Energy saving and extention of aircon operating life
- Maintenance management via A/C network service system reports
- Reliable service at shortest lead time

*1. There are restrictions in applicable areas and release times, therefore please consult us separately for details.
*2. Model name varies upon the system size.
*3. BACnet® is a registered trademark of American Society of Heating, Refrigerating and Air-Conditioning Engineers (ASHRAE).
*4. LONWORKS® is a registered trade mark of Echelon Corporation.
*5. For an I/F unit, one of the following can be selected: ***Local Controller***, intelligent touch Controller, or intelligent Manager III.
*6. Ethernet is a registered trademark of Xerox Corporation.
*7. Refer to the Options page for the name of each model.

New intelligent Manager III

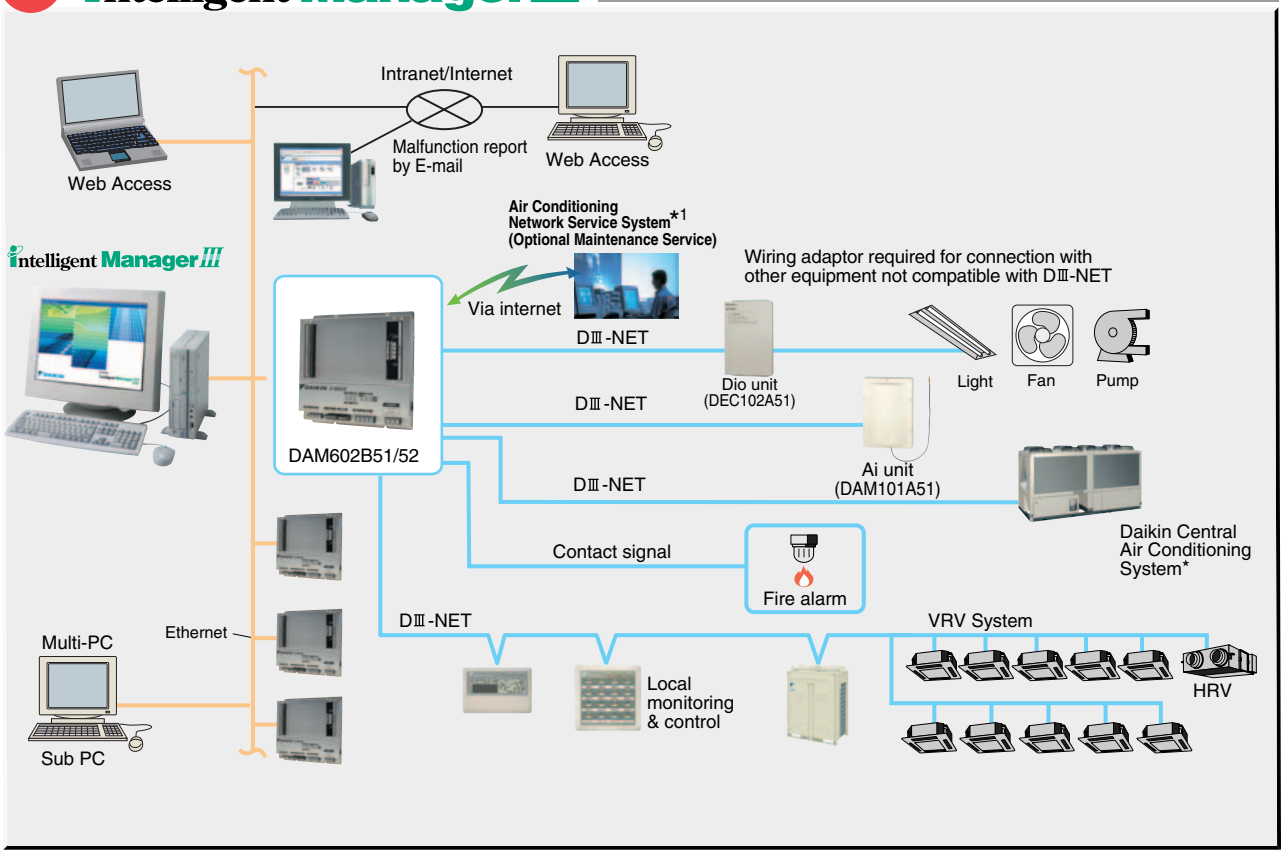

*Interfacing requirements vary depending on model, and some systems may not be suitable. Please contact your distributor for details.
• Information on these systems is preliminary only. Please contact Daikin for formal information on the products.

Centralized control system for easy provision of effective control and monitoring of VRV system functions

Special Functions

- Features control and monitoring functions for central A/C products and an Air Conditioning Network Service function.
- Using an external contact via DIII-NET, monitors and controls equipment such as lighting, fans, or building security systems.

- Floor visual navigation
- Graphical report
- Multi-PC access
- Analogue interlock
- Automatic heat/cool change-over
- Temperature limitation
- Sliding temperature <Optional (DAM101A51) unit required>
- Energy saving function (ECO mode. Power limit control) (Optional)
- Air Conditioning Network Service System (Optional Maintenance Service)

New Functions

- **Monitor and control from the remote site by Web browser (Optional)**
- **PPD data can be managed from the remote site by Web browser (Optional)**
- **Send malfunction report through the Internet by E-mail (Optional)**
- **Compliant with the RoHS Directive (DAM602B51/52)**

6.7 HRV (Heat Reclaim Ventilation)

6.7.1 Product Introduction

Background

To maintain the comfortable environment in a building, the fresh air intake is essential the same as an appropriate room temperature control.

The heating / cooling efficiency of conventional standard ventilating systems drops during cooling / heating operation and it is waste of energy.

The Heat Reclaim Ventilation was developed to solve those problems.

What is HRV (Heat Reclaim Ventilation) ?

HRV is a system which recovers the thermal energy of exhaust air and reuses it for heating or cooling of supply air. It exchanges heat between the exhaust and the supply air.

Daikin's HRV

Daikin's HRV greatly reduces the total power consumption by operation interlocked with air conditioner such as VRV or SkyAir.

The total heat exchange mode and the ventilation mode can be automatically selected by setting to the automatic ventilation mode.

Main Features

1. The operation is available when the outdoor air temperature is down to –15°C.
2. Interlocked operation with VRV (SkyAir)
3. Automatic ventilation mode changeover
4. Energy Saving
5. FRESH-UP operation
6. Quiet operation
7. Easy installation
8. Easy maintenance
9. Wide variety of optional accessories

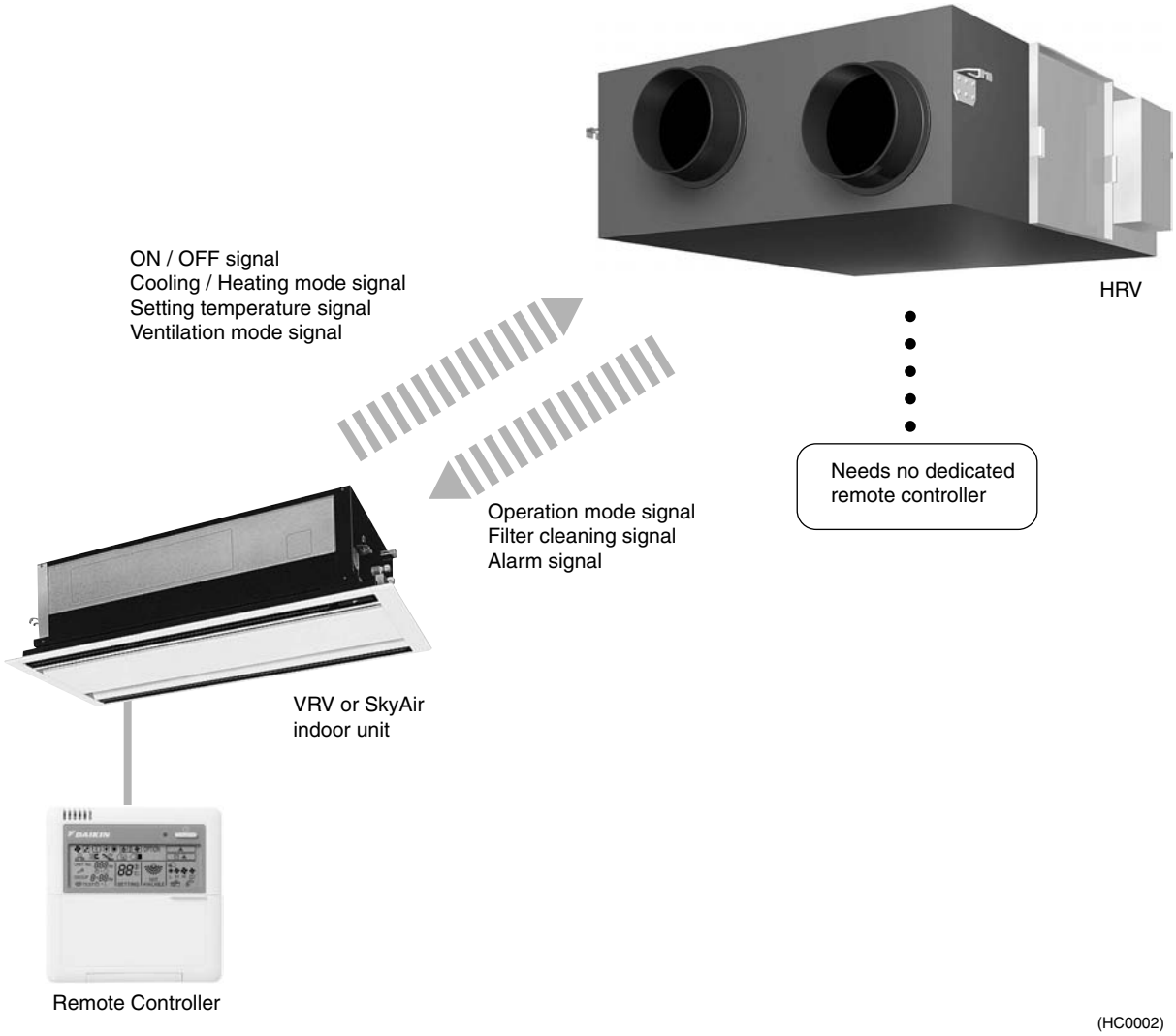

(HC0002)

6.7.2 Structure

VAM150GJVE, VAM250GJVE, VAM350GJVE, VAM500GJVE, VAM650GJVE, VAM800GJVE, VAM1000GJVE

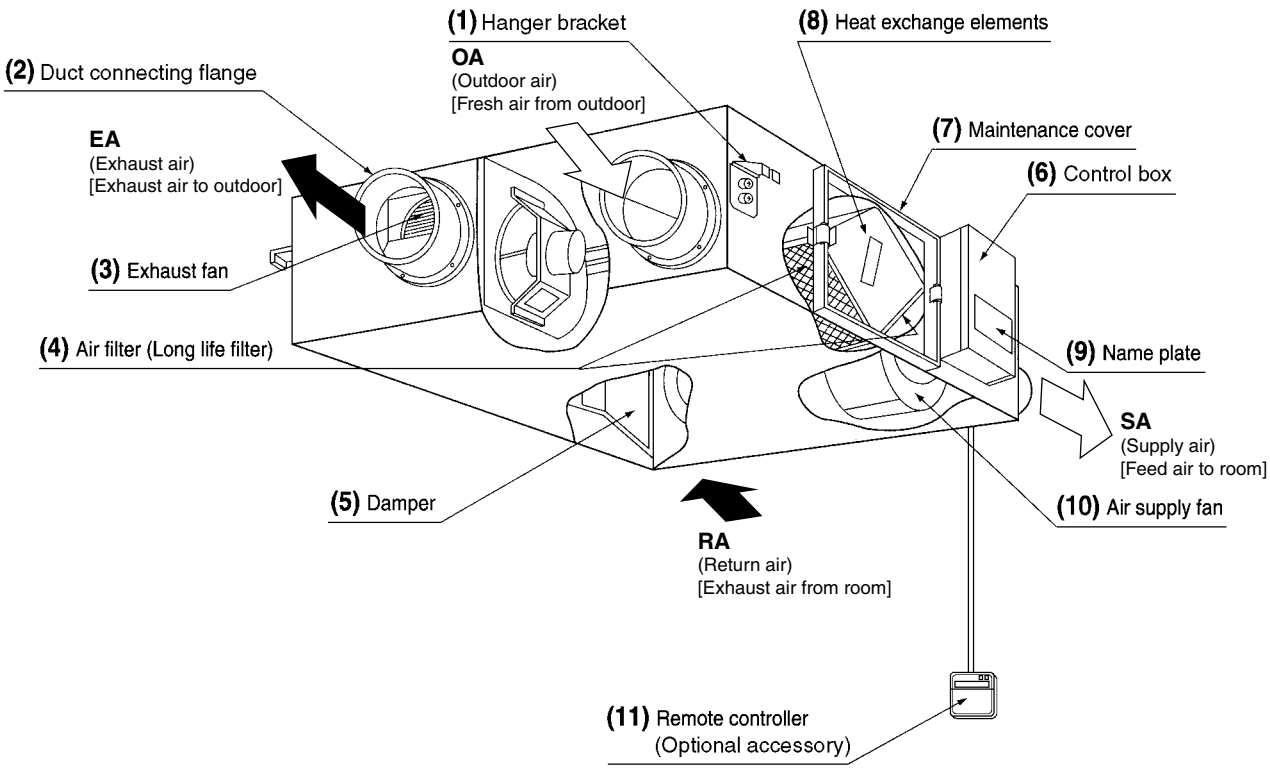

3P034927-5J

VAM1500GJVE, VAM2000GJVE

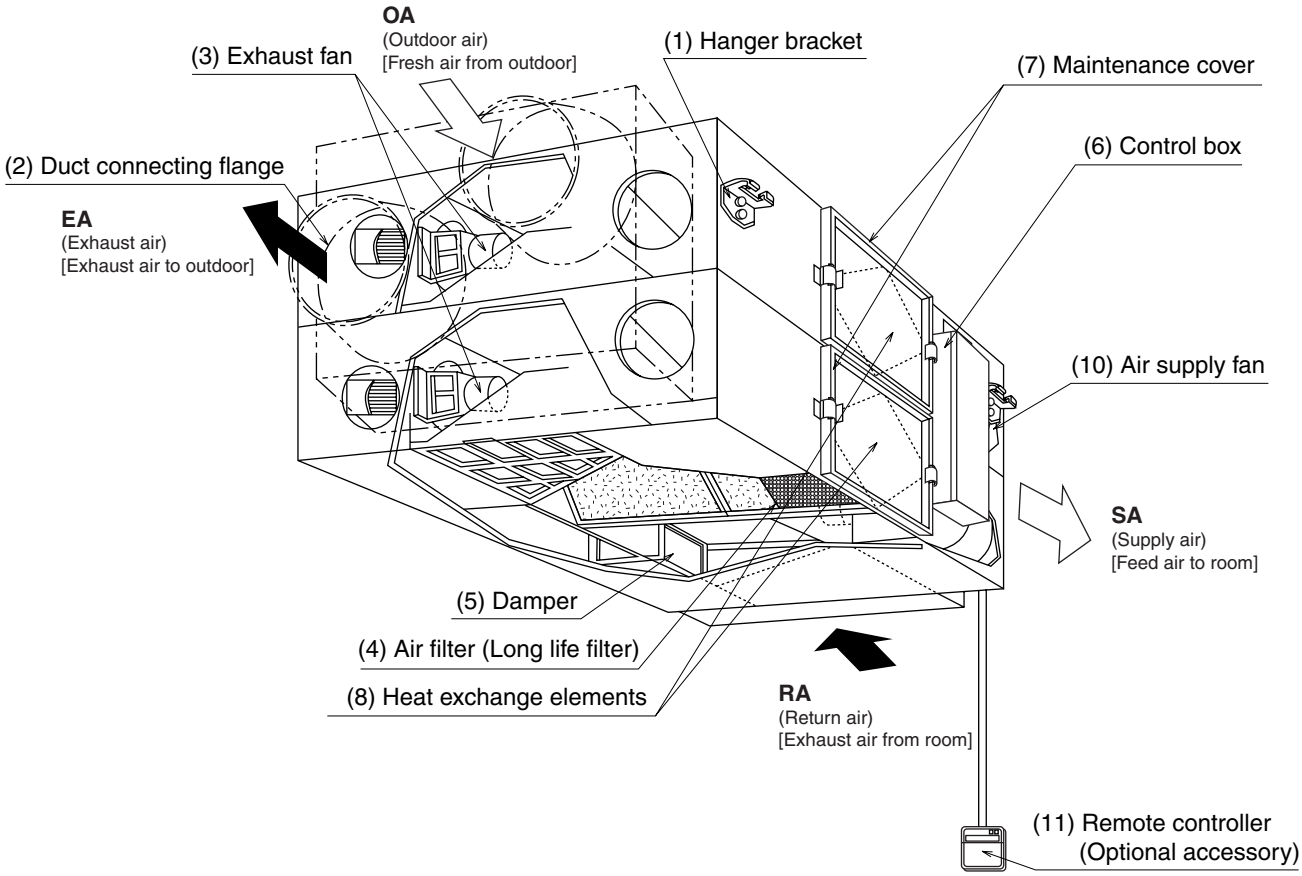

3P034927-5J

6.7.3 Features

Interlocked Operation with VRV (SkyAir)

1. Simultaneous ON / OFF with the indoor unit by the indoor unit remote controller.
2. HRV independent operation during air conditioning off season by the indoor unit remote controller.
3. Automatic ventilation mode changeover: Auto / Heat Recovery / Bypass
4. Fan speed changeover by the indoor unit remote controller : High / Low (Ultra-High / High, Ultra-High / Low)
5. Precooling / heating control function setting to delay the start of ventilation during air conditioner start-up to realize the high energy saving efficiency.
6. FRESH-UP operation setting
7. Filter sign display notifies the time for cleaning the filter.
8. No need to purchase or install the HRV exclusive remote controller
9. Advantage to IAQ (Internal Air Quality)

Note:

5,6 can be set at the initial setting only.

Type	Interlocked operation with air conditioner	HRV independent operation
Structure	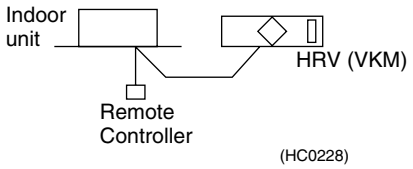	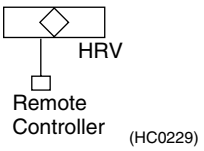
Features	■ Simultaneous operation by air conditioner's remote controller is available.	■ Operation / Stop ■ Ventilation mode changeover ■ Fresh-up changeover ■ Timer mode start / stop ■ Malfunction digital display
Connectable Indoor unit	VRV (all indoor unit), SkyAir	

Daikin's HRV	Other types
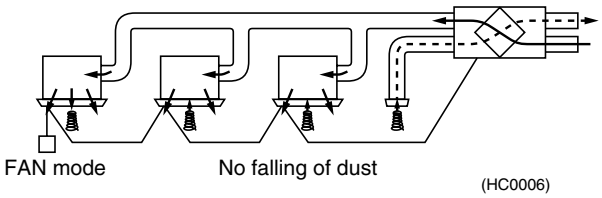	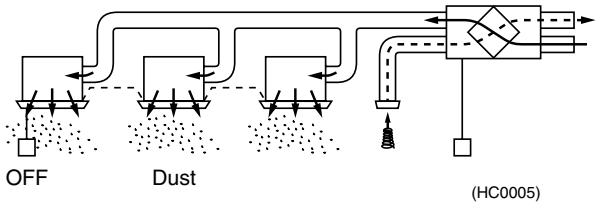
Dust does not fall off from the air filter because the air supply fan of the interlocked indoor unit remains activated even when the HRV is operated independently.	If conventional HRV, with exclusive remote controller, is directly connected to indoor unit of air conditioner, dust may fall off from air filter when air conditioner is OFF.

Installation Examples

Direct duct connection system	Independent duct system
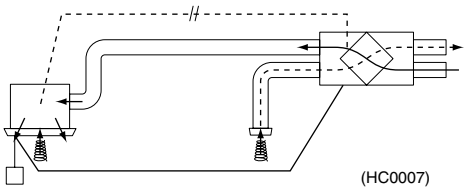	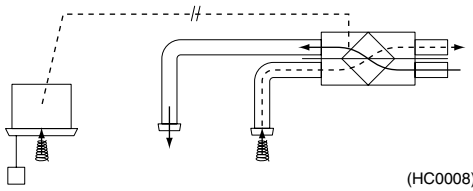

Energy Saving

By heat recovery operation

Approx. **20%** reduction of heating / cooling load

+

HRV unit recovers the thermal energy during cooling / heating operation of air conditioner. HRV reduces the cooling / heating load drastically and enhances the heating / cooling efficiency.

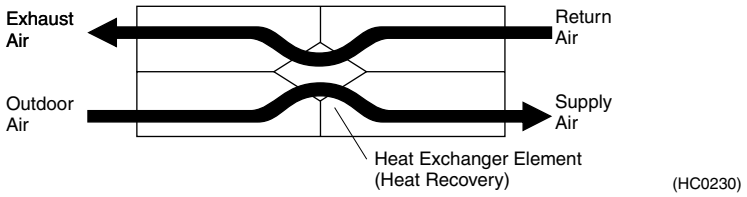

By setting to automatic ventilation mode

Approx. **8%** reduction of heating / cooling load

+

Proper use of Heat recovery ventilation and normal ventilation saves energy.
When the cooling operation is required in winter, use of heat recovery ventilation is not efficient because the outdoor air temperature is normally lower than that of the indoor. Thus, the proper use of ventilation mode enhances the heating / cooling efficiency.

Automatic Ventilation mode changeover

Operation	Sensor of ventilation	Decision of mode (Which is more energy efficient?)
	Difference between indoor / outdoor temp.	
Cooling	Indoor temp. > Outdoor temp. Indoor temp. < Outdoor temp.	Normal ventilation (Bypass) Heat recovery ventilation
Heating	Indoor temp. > Outdoor temp. Indoor temp. < Outdoor temp.	Heat recovery ventilation Normal ventilation (Bypass)

Refer to the CONTROL for the mode changeover.

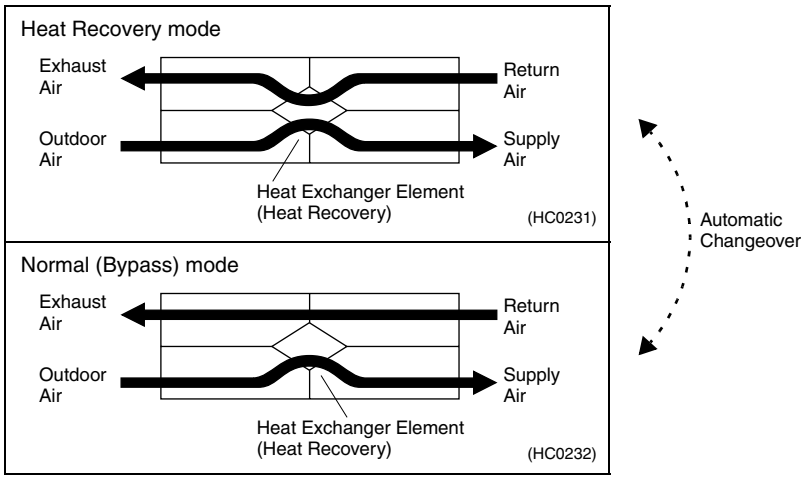

By Precooling / heating operation

Approx. **2%** reduction of heating / cooling load

||

The load is reduced at startup of the air conditioner by the following control.
Before the working hour, the room air is clean.
Therefore, the startup of HRV can be delayed.

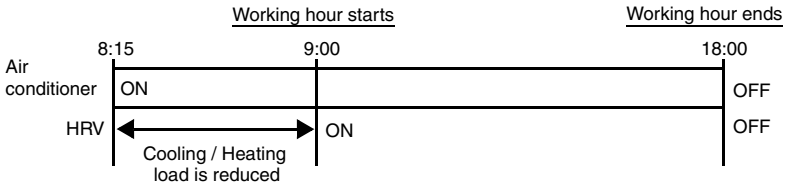

Total 30% reduction of heating / cooling load

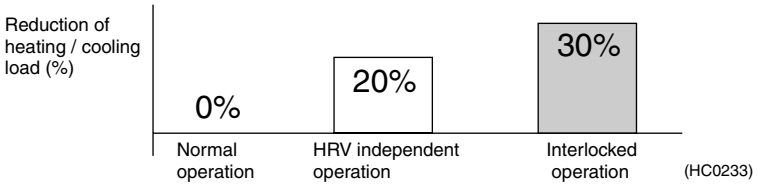

Note:
The total heating / cooling load may vary depending on the climate or the other environmental conditions.

FRESH-UP Operation

Both the excessive supply mode and the excessive exhaust mode are selectable.
This function creates a more comfortable air environment.

	Supply Fresh-up (Excessive outdoor air supply)	Exhaust Fresh-up (Excessive exhaust air supply)
Detail	Supply air volume can be set at a higher level than the exhaust air by the remote controller.	Exhaust air volume can be set at a higher level than the supply air by the remote controller.
Major effects	■ Prevents inflow of toilet odor ■ Prevents inflow of outdoor air in winter	■ Prevents outflow of airborne bacteria from rooms in a hospital ■ Prevents outflow of odors from rooms in a nursing home
Application	Offices, etc.	Hospitals, Nursing homes, etc.
Example	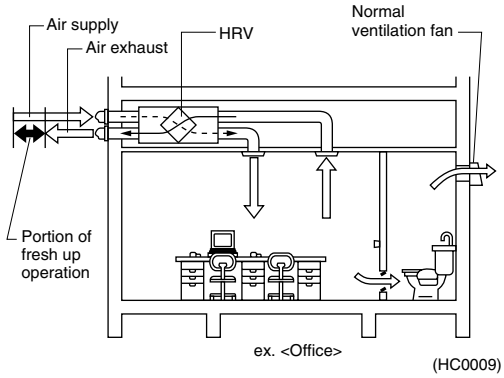	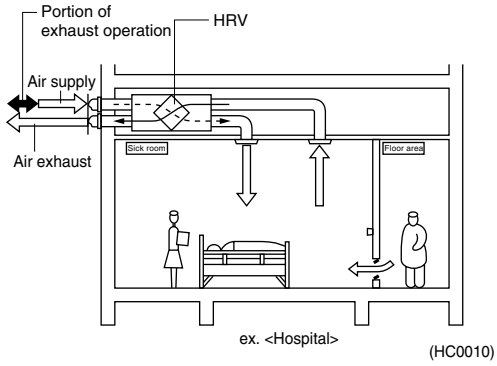

Nighttime free cooling operation
〈AUTOMATIC HEAT PORGE FUNCTION AT NIGHT〉

The nighttime free cooling is an energy-conserving function which works at night when the air conditioners is off, reducing the cooling load in the morning when the air conditioner is turned on by ventilating rooms which contain office equipment which raises the room temperature.

- Nighttime free cooling only works during cooling and when connected to Building Multi or VRV systems.
- Nighttime free cooling is set to “off” in the factory settings; so request your dealer to turn it on if you intend to use it.

Operation image

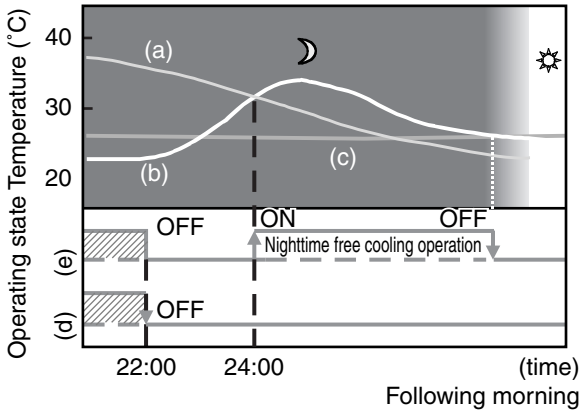

(a) Outside temperature
(b) Indoor temperature
(c) Set temperature
(d) Operating state of Air conditioner
(e) Operating state of Total heat exchanger

■ **EXPLANATION OF NIGHTTIME FREE COOLING OPERATION IMAGE**

The unit compares the indoor and outdoor temperatures after the air conditioning operation stops for the night. If the following conditions are satisfied, the operation starts, and when the indoor temperature reaches the air conditioning setting, the operation stops.

<Conditions>

1. the indoor temperature is higher than the air conditioning setting and
2. the outdoor temperature is lower than the indoor temperature,

If the above conditions are not satisfied, revaluation is made every 60 minutes.

NOTE

- The nighttime free cooling operation works when the HRV unit is off. Therefore, it is not possible to stop the nighttime free cooling operation, though the forced off is input from the optional controllers for centralized control.

Element (HEP element) Material

Material

The partition sheet in the heat exchanger element has been significantly upgraded. It is approximately two-third thinner than the conventional type, resulting in a great improvement in moisture absorption!
The material is flame-retardant for safety.
The fungi proof design also keeps the air clean.

Structure

The heat exchanger element is designed without moving parts for higher durability and reliability.
The supply air passage and the exhaust air passage are arranged in right angle to prevent the supply and exhaust air from getting mixed.

(HC0013)

Features

- High air shielding
  Even in the conventional less humidity conditions, maintaining the features of the material that can get excellent moisture permeability, we have achieved high air shielding, by special processing in the step of milling paper.

New ultra-thin film element

Conventional element

Moisture absorption is less effective due to the thickness of the partition sheets. It also limits the effective area that supply and exhaust air can be exposed to.

Thickness of the partition sheet
60 µm

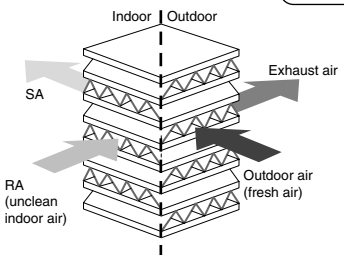

New ultra-thin film element

Newly developed!

Due to the thinner film…
- Decreases the moisture resistance of the partition sheets drastically.
- Realizes more space for extra layers in the element, resulting in increased effective area that supply and exhaust air can be exposed to.

Moisture absorption increased by approx. 10%!

Thickness of the partition sheet
40 µm

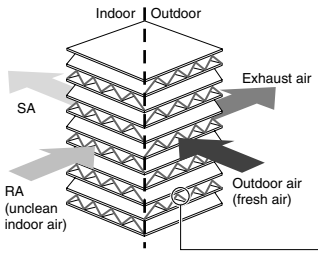

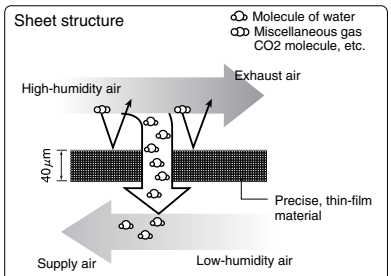

Moisture exchange efficiency is greatly improved by using optimized thinner films and moisture-absorption materials in the element. Furthermore, miscellaneous gas barrier properties are maintained by decreasing the porosity in the moisture-absorption materials.

Easy installation and service maintenance

Downsized

Model name	Height (mm)
VAM150GJVE	278
VAM250GJVE	278
VAM350GJVE	306
VAM500GJVE	306
VAM650GJVE	338
VAM800GJVE	387
VAM1000GJVE	387
VAM1500GJVE	785
VAM2000GJVE	785

Parallel air flow system (Daikin)

This system prevents misconnection and simplifies the installation work

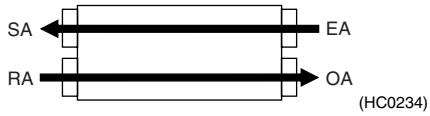

Cross air flow system

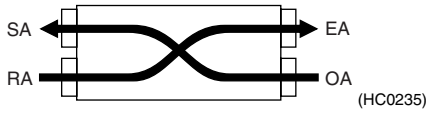

Service Maintenance

Vertical installation is available.
The unit must be installed with the side of RA, SA down.
It is necessary to make a trap.
Because the trap of wiring can protect against ingress of water.

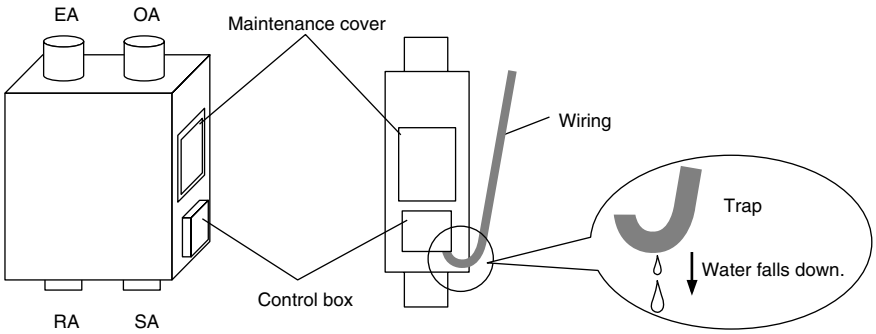

Upside-down installation is available.
It allows the common use of the inspection hole and reduces the space and installation work.
For 2 units closely installed, only one inspection hole of 450 × 450 mm will do for maintenance or replacement of the heat exchanger element, etc.
Long life filter is equipped.

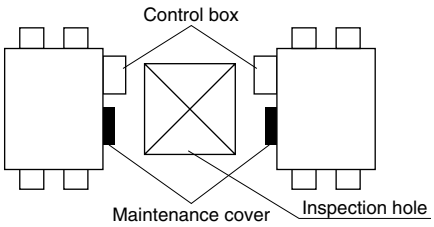

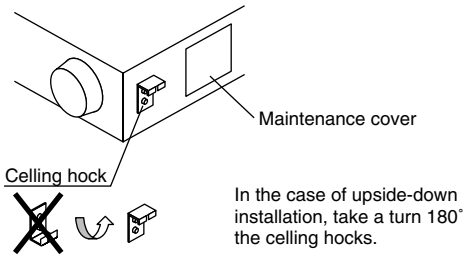

The operation is available when the outdoor air temperature is down to -15°C

(Operation when the outdoor air temperature becomes lower than -10°C)

When the outdoor air suction temperature becomes lower than -10°C, the unit is changed to intermittent operation to prevent freezing of the heat exchanger element and dew condensation within the unit.

Intermittent operation

The outdoor air thermistor (standard equipment) within the unit detects the temperature. According to the detected temperature, the following operation determines.

<Step 1>

- The air supply fan is changed to intermittent operation, when the temperature is lower than -10°C.
- The intermittent operation of the air supply fan is changed to an operation of each cycle for 45 minutes' operation after stopping operation for 15 minutes.
- The exhaust fan operates continuously according to setup.

<Step 2>

- When the temperature becomes lower than -15°C, the unit stops operation to prevent any defect, such as dew condensation and freezing. The unit does not ventilate.
  But, to detect the elevation of the outdoor air temperature, the unit operates for 5 minutes per hour.
- The control by the external damper (local purchase) is available.
  When the unit is not operating, the unit prevents the cool outdoor air from invading.
  The power is applied from the connector X15A to the external damper. Therefore, the operation of the unit is controlled in conjunction with the external damper.

Note:

Local setting is required.

The high efficiency filter (that has 65% of average dust collecting efficiency) is suitable

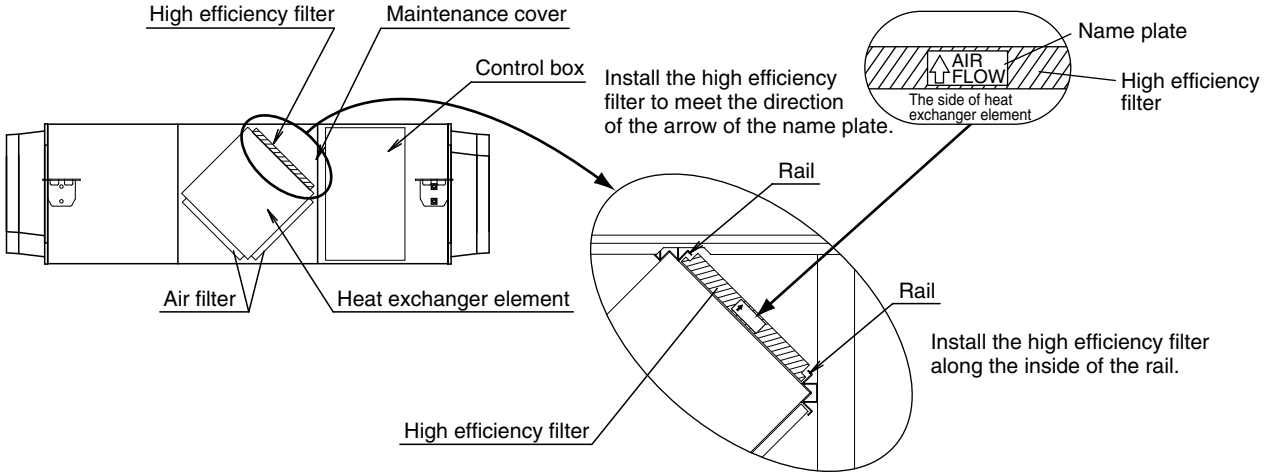

Additional optional accessories

Built-in optional high efficiency filter

BRP4A50: Heater control kit

6.8 HRV-With DX Coil-(Heat Reclaim Ventilation) VKM-GA(M) Series

6.8.1 General

- Interlocked operation with VRV
- (Controls of interlocked operation for energy saving : The remote controller for air conditioner can be used, so special remote controller for HRV is unnecessary.)
- Mounted for Direct expansion coil unit for outdoor air treatment
- Changeover function for ventilation mode to Auto/Manual
- FRESH-UP operation (Selectable : Supply air rich mode or exhaust air rich mode ; initial setting)
- Mounted for Water flow type Natural evaporating humidifier
- Possible to attach the High efficiency filter
- Attaching the Power supply terminal for easy connection
- Quiet operation
- Changeover function for air flow rate to High/Low (Ultra-high setting is possible.)
- The power supply of HRV is commonly used with the air-conditioner (Single-phase 220-240V, 50Hz)
- Filter sign display and reset
- Timer setting

■ Features of Direct Expansion Coil

- Draftless ventilation in Heating.
- High humidifying function.

■ How to use this unit

- This unit should be used with air conditioners.
- Air conditioning is impossible only by this unit, because this unit does not have temperature control function. (It's capacity is too small in order to control the room temperature to the whole)
  And should be operated in combination with standard indoor units. (Interlocked operation)
- Independent operation without taking an interlock with indoor units is possible, however, temperature setting by remote controller is impossible.
  In this ON/OFF operation by thermostat depends on factory setting, however, this value is changeable by setting mode on site.
- Model selection should be done not by cooling capacity but by ventilating air flow rate.

6.8.2 Design Flexibility

6.8.2.1 Efficient Fan Performance Produces a High Static Pressure

Improvements to the fan, including the use of multi-arc blades, a thinner scroll and optimized fan scroll angle, help to boost efficiency.

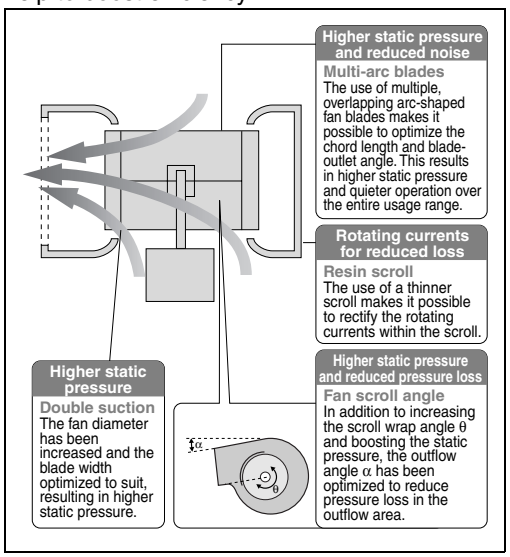

Dramatically higher static pressure is achieved due to improved fan performance. This reduces limitations on unit placement and allows more flexibility in duct design.

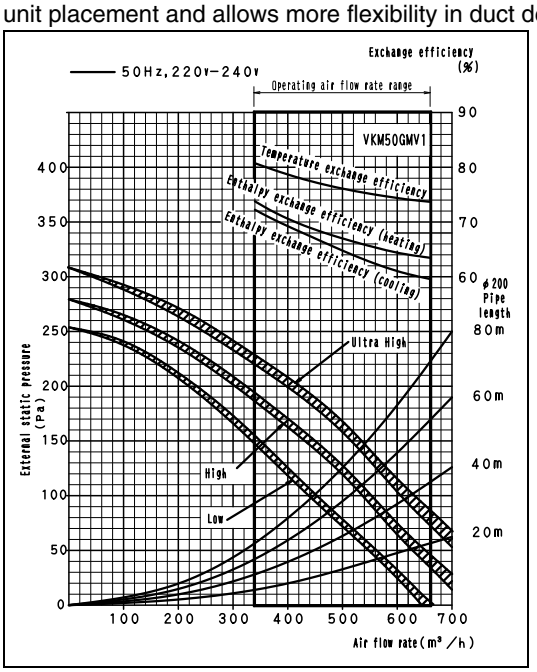

6.8.2.2 Operable Outdoor Temperature Down to –15°C

If the outdoor air temperature falls below –10° C, the unit changes to intermittent operation to prevent freezing of the heat exchanger element and dew condensation within the unit.

Intermittent operation

A thermistor (standard equipment) within the unit detects the outdoor air temperature. Unit operation varies according to the detected temperature.

6.8.2.3 Indoor Unit Connectable to up to 130% of the Capacity

6.8.2.4 Slim Design

The slim design of only 387 mm in height enables installation inside ceilings with less than 400 mm of clearance.

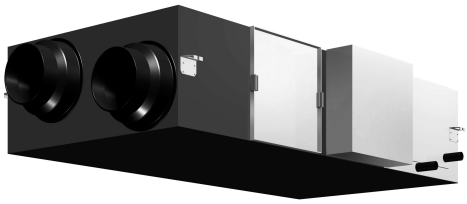

6.8.3 Energy Saving

6.8.3.1 Automatic Heat purge Function at Night

Not operation

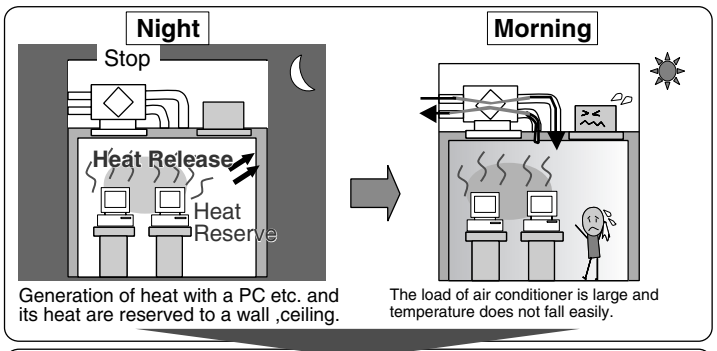

Automatic heat purge control

The heat which accumulated indoors is discharged at night. Air Conditioning load of the next day is reduced, and efficiency is increased.

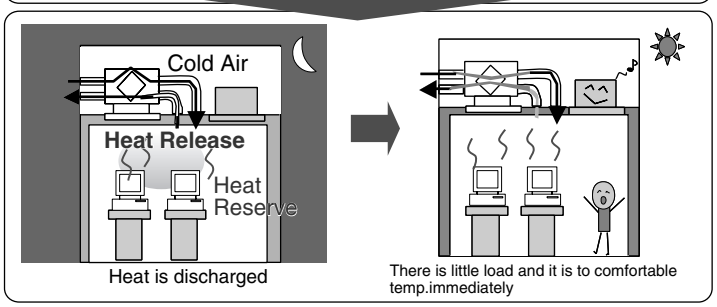

In case of interlocking operation with an air conditioner

■ **Mechanism**

<Operation>

1. Interlocking operation is carried out with the air-conditioning machine, and the time of 2 hours passing after an operation stop is judged to be night.
   (The same judgment as the present preparatory operation)
2. After 2-hour progress, when indoor temperature is higher than the preset temperature of an air-conditioning machine and higher than outdoor temperature, operation is started.
3. Operation will be stopped if indoor temperature falls to air-conditioning machine preset temperature.

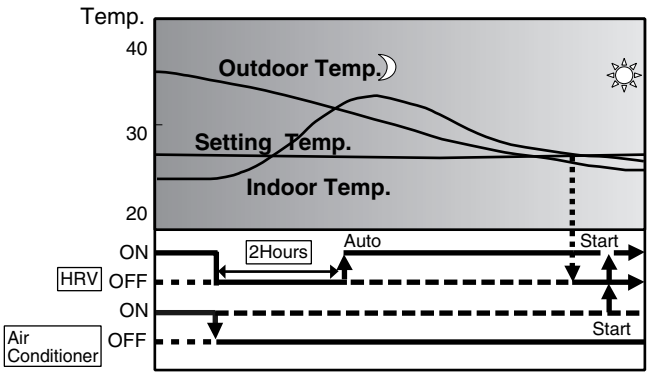

■ **Effect** (Field Setting by remote controller)

It is reduction of about 5% of air-conditioning load at the time of cooling operation.

Air conditioning operation carries out to April to October, and air-conditioning load is calculated only with sensible heat load.

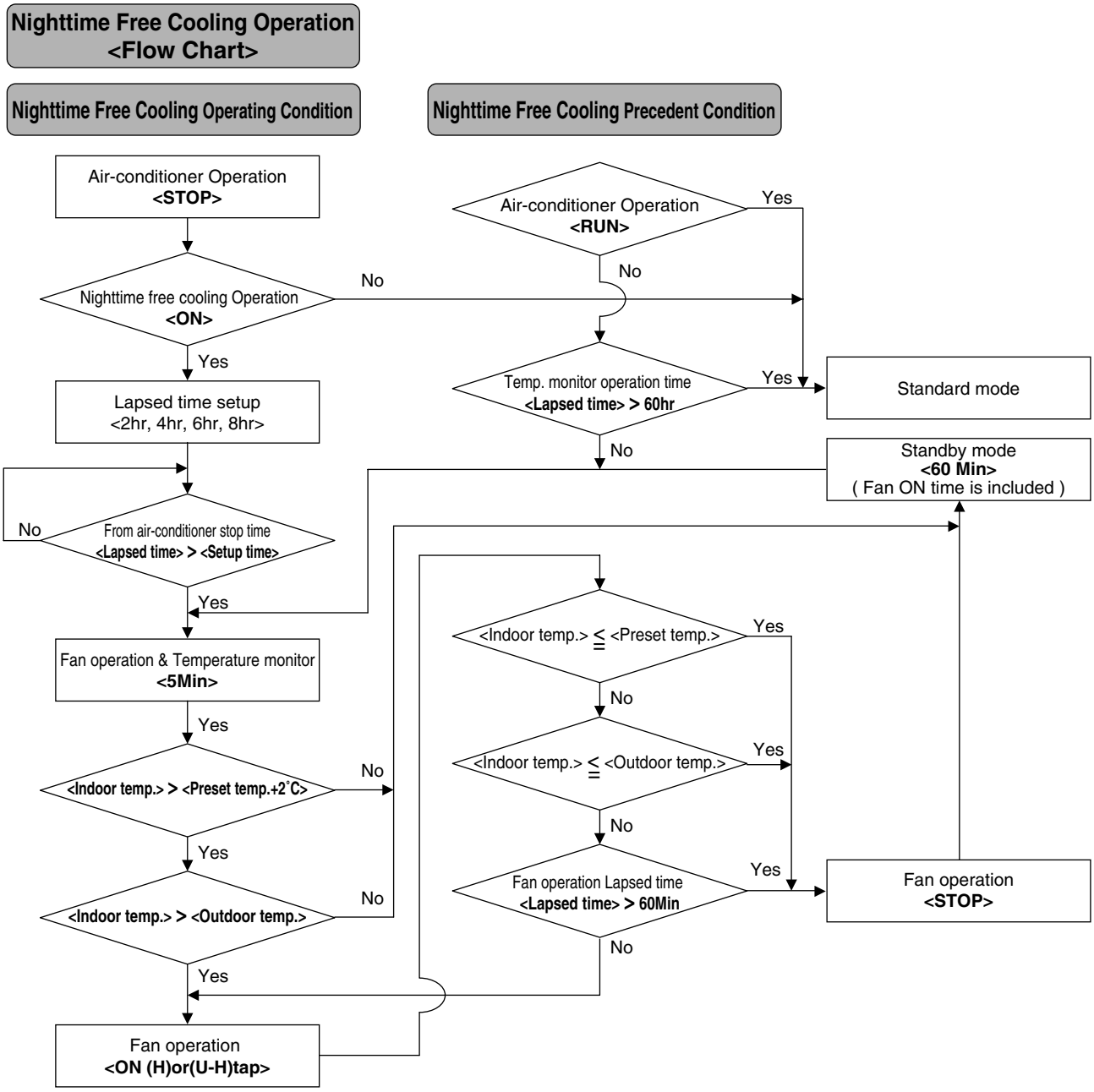

6.8.3.2 Automatic Changeover to Efficient Operation Patterns

Operation automatically changes to the optimum pattern to suit conditions.

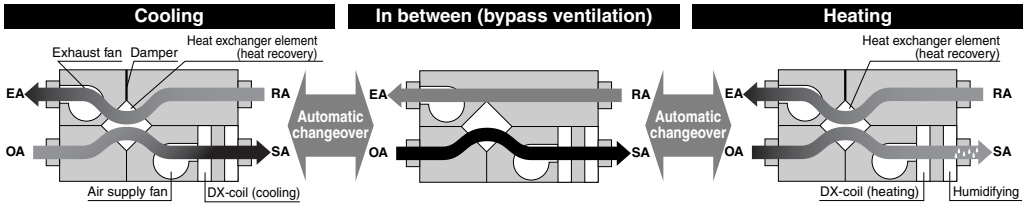

6.8.3.3 Efficient Outdoor Air Introduction with Heat Exchanger and Cooling/heating Operation

Indoor unit with outdoor air treatment

Using outdoor air, the temperature can be brought near room temperature with minimal cooling capacity through the use of outdoor air.

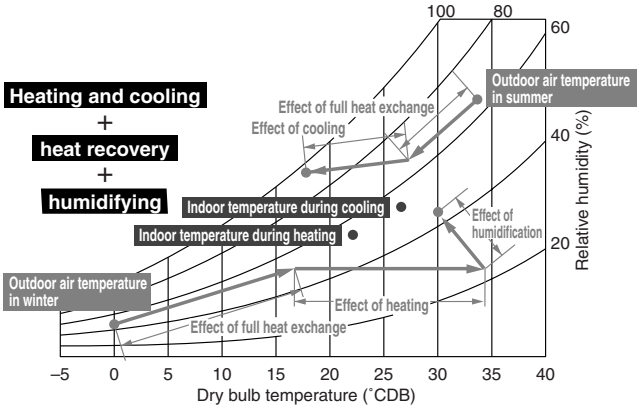

6.8.3.4 Operations, Such as Cleaning, Ventilation, Cooling/heating and Humidifying, are Possible with One Remote Controller.

Four air conditioner functions can be managed using a single remote control. This makes it easy to obtain high-quality and energy-efficient outdoor air treatment.

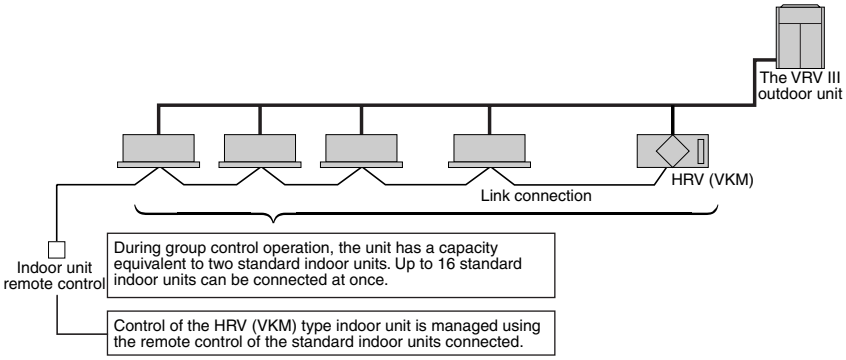

6.8.4 Unique Control System

6.8.4.1 Independent Control Possible

Individual outdoor air treatment operation is possible by connecting an optional remote controller.

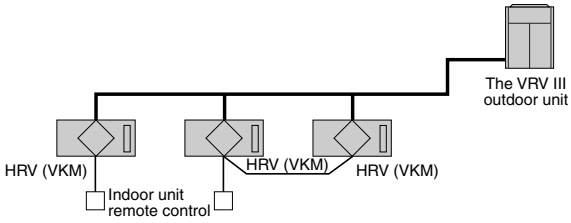

6.8.5 Quiet Operation

Reduced pressure loss and quieter operation internally lowers the noise output of the 1,000m^3/h type system to 38dB (50Hz 240V, High mode).

6.8.6 Easy Installation

6.8.6.1 Integrated System Includes Ventilation, Air Conditioning and Humidifying Operations

Rather than using separate ventilation, air conditioning, and humidifying components, the system incorporating HRV (VKM) integrates all functions, reducing the total number of indoor units and facilitating a far simpler system. The installation space becomes smaller and the labor required for installation and maintenance is reduced significantly.

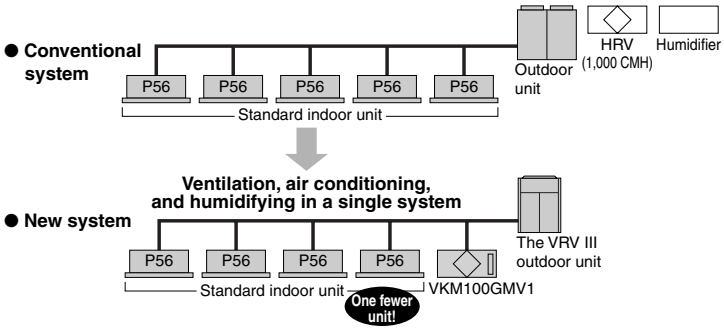

6.8.7 Other Features

6.8.7.1 Interlocked Operation with VRV

1. Simultaneous ON / OFF with the indoor unit by the indoor unit remote controller.
2. HRV independent operation during air conditioning off season by the indoor unit remote controller.
3. Automatic ventilation mode changeover : Auto / Heat Recovery / Bypass
4. Fan speed changeover by the indoor unit remote controller : High / Low, Ultra-High / High
5. FRESH-UP operation setting
6. Filter sign display notifies the time for cleaning the filter.
7. No need to purchase or install the HRV exclusive remote controller
8. Advantage to IAQ (Internal Air Quality)

Note

4-6 can be set at the initial setting only. (When using the remote controller BRC1C62)

Type	Interlocked operation with air conditioner
Structure	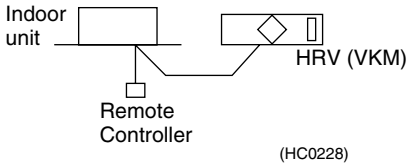
Features	• Simultaneous operation by air conditioner's remote controller is available. • Fan speed can be set at the initial setting.
Connectable Indoor unit	VRV (all indoor unit)

Daikin's HRV	Other types
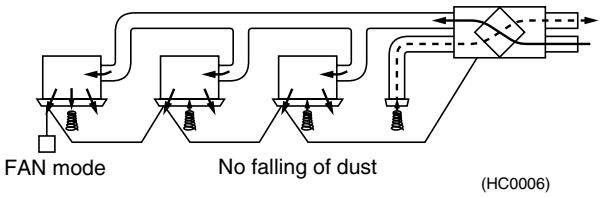	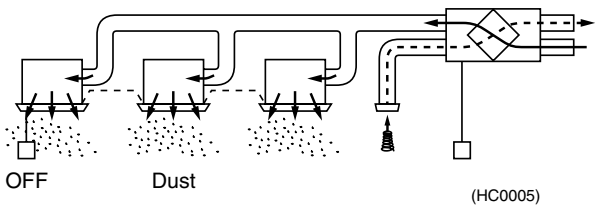
Dust does not fall off from the air filter because the air supply fan of the interlocked indoor unit remains activated even when the HRV is operated independently.	If conventional HRV, with exclusive remote controller, is directly connected to indoor unit of air conditioner, dust may fall off from air filter when air conditioner is OFF.

Note

1) In case of the direct duct connection system, operate interlocking with indoor units.

2) Do not connect the duct with discharge air side of indoor units.

Installation Examples

Direct duct connection system	Independent duct system
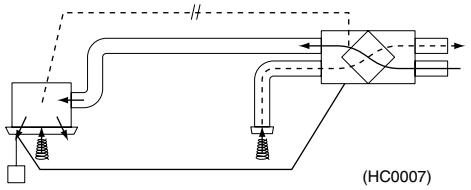 (HC0007)	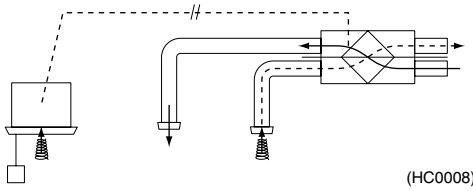 (HC0008)

6.8.7.2 Mechanism of Energy Saving

By heat recovery operation

Approx. **20%** reduction of heating / cooling load

+

HRV unit recovers the thermal energy during cooling / heating operation of air conditioner. HRV reduces the cooling / heating load drastically and enhances the heating / cooling efficiency.

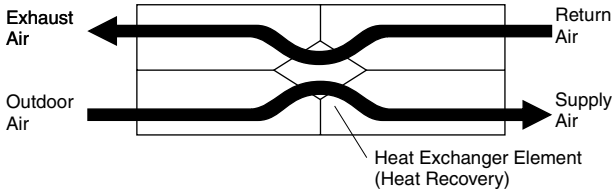

(HC0230)

By setting to automatic ventilation mode

Approx. **6%** reduction of heating / cooling load

+

Proper use of Heat recovery ventilation and normal ventilation saves energy.
When the cooling operation is required in winter, use of heat recovery ventilation is not efficient because the outdoor air temperature is normally lower than that of the indoor. Thus, the proper use of ventilation mode enhances the heating / cooling efficiency.
Automatic Ventilation mode changeover

Operation	Sensor of ventilation	Decision of mode (Which is more energy efficient?)
	Difference between indoor / outdoor temp.	
Cooling	Indoor temp. > Outdoor temp. Indoor temp. < Outdoor temp.	Normal ventilation (Bypass) Heat recovery ventilation
Heating	Indoor temp. > Outdoor temp. Indoor temp. < Outdoor temp.	Heat recovery ventilation Normal ventilation (Bypass)

Refer to the CONTROL for the mode changeover.

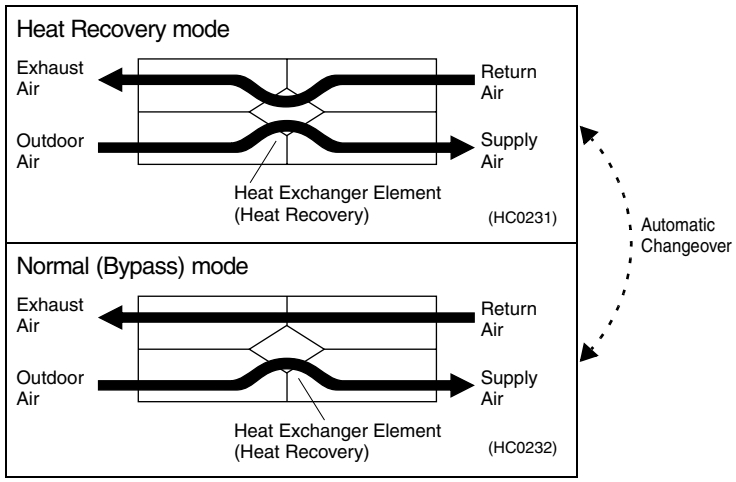

=

Total **26%** reduction of heating / cooling load

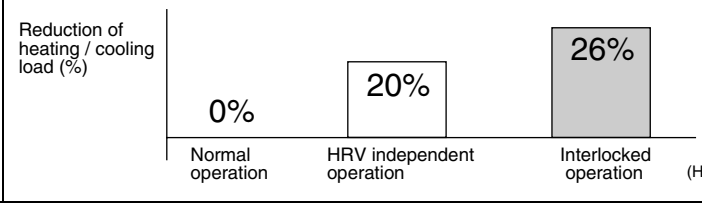

(HC0233)

Note :

The total heating / cooling load may vary depending on the climate or the other environmental conditions.

6.8.7.3 Fresh-up Operation

Both the excessive supply mode and the excessive exhaust mode are selectable.
This function creates a more comfortable air environment.

	Supply Fresh-up (Excessive outdoor air supply)	Exhaust Fresh-up (Excessive exhaust air supply)
Detail	Supply air volume can be set at a higher level than the exhaust air by the remote controller.	Exhaust air volume can be set at a higher level than the supply air by the remote controller.
Major effects	• Prevents inflow of toilet odor • Prevents inflow of outdoor air in winter	• Prevents outflow of airborne bacteria from rooms in a hospital • Prevents outflow of odors from rooms in a nursing home
Application	Offices, etc.	Hospitals, Nursing homes, etc.
Example	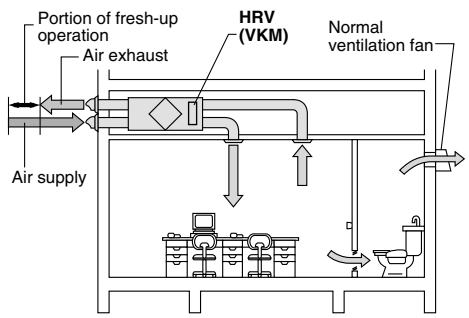	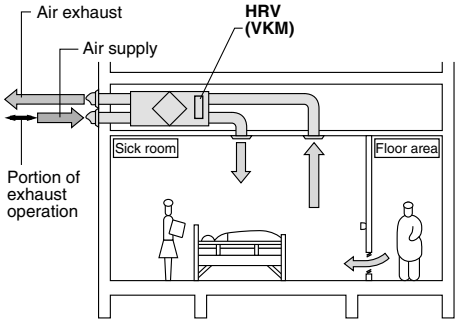

6.8.7.4 Proprietary Developed HEP Element

The heat exchange element uses a High Efficiency Paper (HEP) that has superior moisture-absorption and humidifying properties and doubles the current efficiency of moisture absorption. The heat exchange unit speedily recovers heat contained as latent heat (vapor). The element is made of a material with superior flame-resistant properties and is treated with an anti-molding agent.

Operation of the heat exchanger element

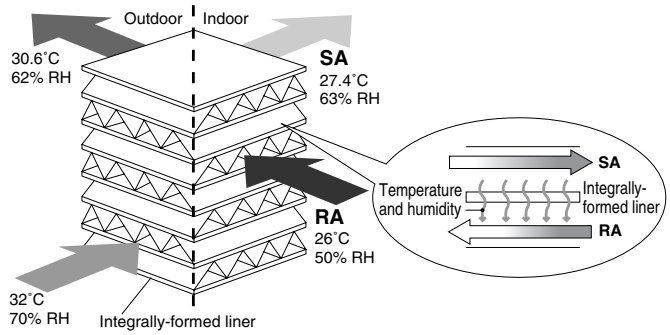

(HC0013)
HEP anti-molding

Features

- High air shielding
  Even in the conventional less humidity conditions, maintaining the features of the material that can get excellent moisture permeability, we have achieved high air shielding, by special processing in the step of milling paper.

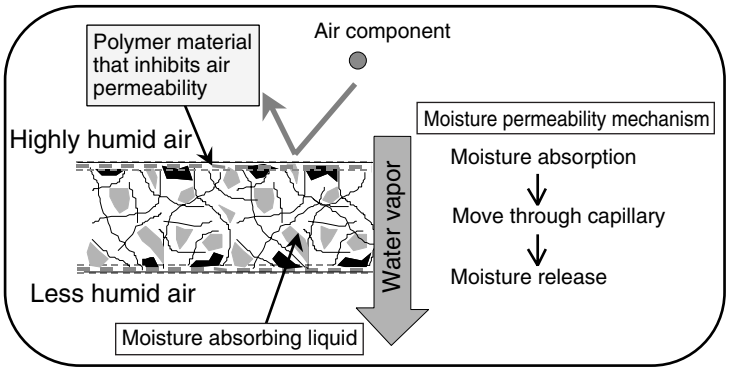

- Polymer material that inhibits air permeability that treated on the surface of the heat exchanger element restrains air permeability.

6.8.7.5 Easy Installation and Service Maintenance

Downsized

Model name	Height (mm)
VKM50GAMV1	387
VKM50GAV1	
VKM80GAMV1	
VKM80GAV1	
VKM100GAMV1	
VKM100GAV1	

Parallel air flow system (Daikin)

This system prevents misconnection and simplifies the installation work

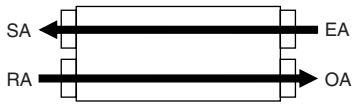

(HC0234)

Cross air flow system (Others)

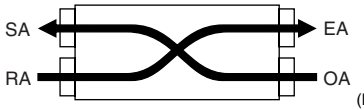

(HC0235)

6.8.7.6 The Operation is Available When the Outdoor Air Temperature is Down to -15°C

(Operation when the outdoor air temperature becomes lower than -10°C)

When the outdoor air suction temperature becomes lower than -10°C, the unit is changed to intermittent operation to prevent freezing of the heat exchanger element and dew condensation within the unit.

Intermittent operation

The outdoor air thermistor (standard equipment) within the unit detects the temperature. According to the detected temperature, the following operation determines.

<Step1>

- The air supply fan is changed to intermittent operation, when the temperature is lower than -10°C.
- The intermittent operation of the air supply fan is changed to an operation of each cycle for 45 minutes' operation after stopping operation for 15 minutes.
- The exhaust fan operates continuously according to setup.

<Step2>

- When the temperature becomes lower than -15°C, the unit stops operation to prevent any defect, such as dew condensation and freezing. The unit does not ventilate.
  But, to detect the elevation of the outdoor air temperature, the unit operates for 5 minutes per hour.

6.8.7.7 The High Efficiency Filter (that has 65% of Average Dust Collecting Efficiency) is Suitable

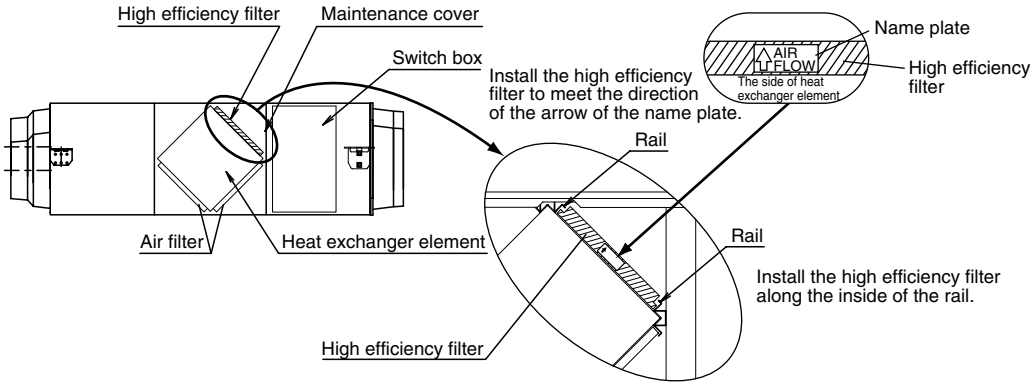

6.8.7.8 Additional Optional Accessories

Built-in optional high efficiency filter

It greatly reduces the installation space.

The installation of access doors and the unit can be reduced.

■ **Selection Procedures (in Japan)**

Various methods are used to calculate the required ventilating air flow rate according to CO_2 generated by inhabitants in a room, waste gas generated by use of fire, and other conditions of a room.
Here are 2 patterns of calculating methods.

Based on inhabitants

$$\text{Required ventilating air flow rate } (m^3/h) = \frac{20 \times A}{B}$$

A : 20 × Living room floor space (m^2)
B : Area occupied per person (m^2)
The above equation conforms to article 20, 2 No.2 of the Building Standards Act in Japan.

Note :

1. 20 (in the above equation) means "20(m^3 / h / person)", which is the required ventilating air flow rate based on the CO_2 exhausted by an adult sitting still in a room. If smoking is allowed, other calculation method should be used.
2. Use 10 (m^2) if the area occupied per person exceeds 10 (m^2).

<Table 1>

Type of building	Area occupied per person (N)	Remarks
Dining houses, restaurants, coffee-shops	3 m^2	Floor space of a part used for business purposes.
Cabarets, beer halls	2 m^2	Floor space of a part used for business purposes.
Japanese-style restaurants, hall for hire	3 m^2	Floor space of a part used for business purposes.
Store market	3 m^2	Floor space of a part used for business purposes.
Pool rooms, Ping-pong rooms, dance halls, bowling alleys	2 m^2	Floor space of a part used for business purposes.
Pin-ball parlors, Go club houses, mahjong parlors	2 m^2	Floor space of a part used for business purposes.
Inns, hotels, and motels	10 m^2	Floor space of a part used for business purposes.
Massage parlors	5 m^2	Floor space of a part used for business purposes.
Meeting places, public halls	0.5 – 1 m^2	Persons accommodated simultaneously with the number of persons calculated per unit.
Offices	5 m^2	Floor space of an office.

* : Values set by the Metropolitan Maintenance Bureau in Japan.

Note :

1. Table indicates the required ventilating air flow rate calculated as 20 m^3 / h.
2. The area occupied per person by type of business is calculated in reference to Application Standards for building administration in compliance with Building Standards Act in Japan.

Based on Room size

$$\text{Required ventilating air flow rate } (m^3/h) = C \times D \times E$$

C : Number of ventilation required per hour (ventilation / h)
D : Area of room (m^2)
E : Height of Ceiling (m)
Calculation is based on the experiences of hygienic laboratory, etc. to find out the number of hourly ventilation of the room air.
(Selection example)

Place : Living room of common household
Required ventilation : 6 times / h (See Table 2)
Area of room : Approx. 30 (m^2)
Height of ceiling : 2.4 m
Required ventilating air flow rate = 6 × 30 × 2.4 ≒ 432 (m^3 / h)

Required ventilating air flow rate and the unit size 500 is almost equal.
So select the close size of the unit.
In this case, select VKM500GMV1.

<Table 2>

Groups	Type of room	Ventilation required
Common household	Living room	6
	Bathroom	6
	Drawing room	6
	Toilet	10
	Kitchen	15
Dining places	Restaurant	6
	Sushi restaurant	6
	Banquet hall	10
	Tempura restaurant	20
	Cooking room	20
Inns and hotels	Guest room	5
	Corridor	5
	Dance hall	8
	Large dining hall	8
	Washroom, Toilet	10
	Cooking room	15
	Laundry room	15
	Engine room	20
	Boiler room	20
Hospitals	Consultation office	6
	Sick room	6
	Office room	6
	Corridor	10
	Waiting room	10
	Bathroom	10
	Dining room, Toilet	10
	Respiratory disease room	10
	Laundry room	15
	Cooking room	15
	Surgery room	15
	Sterilizing room	15
	Engine room	20
	Boiler room	20
Schools	Class room, library	6
	Auditorium	6
	Experimental chemistry room	6
	Gymnasium	8
	Toilet	12
	Cooking room	15

Groups	Type of room	Ventilation required
Playhouses and movie theaters	Audience room	6
	Corridor	6
	Smoking room	12
	Toilet	12
	Projector room	20
Plants	Office room	6
	General work room	6
	Telephone room	6
	Spinning plant,	10
	Printing plant	10
	Battery room	10
	Machinery plant	10
	Generator room	15
	Substation room,	15
	Painting shop,	15
	Welding plant	15
	Chemical plant	15
	Food plant	20
	Wood working plant	20
	Casting plant	50
General buildings	Office room	6
	Waiting room	10
	Show room, Toilet	10
	Conference room	12
Comfort stations		20
Dark rooms	Dark rooms for photo	16
Guest rooms of ship		6
Room of potential noxious gas or combustible gas		20 or more

Part 2
Indoor Units

FXCQ-M
Ceiling Mounted Cassette Type (Double-Flow) 45

FXFQ-M
Ceiling Mounted Cassette Type (Multi-Flow) 67

FXKQ-MA
Ceiling Mounted Cassette Corner Type 111

FXDQ-P, FXDQ-N(A)
Slim Ceiling Mounted Duct Type. 131

FXSQ-M
Ceiling Mounted Built-In Type. 171

FXMQ-MA
Ceiling Mounted Duct Type. 213

FXHQ-MA
Ceiling Suspended Type 239

FXAQ-MA
Wall Mounted Type 255

FXLQ-MA / FXNQ-MA
Floor Standing Type / Concealed Floor Standing Type 279

FXUQ-MA
Ceiling Suspended Cassette Type (Connection Unit Series). 301

FXCQ-M
Ceiling Mounted Cassette Type (Double-Flow)

1. Features 46
2. Specifications 48
3. Dimensions 50
4. Piping Diagrams 54
5. Wiring Diagrams 55
6. Electric Characteristics 57
7. Capacity Tables 58
   7.1 Cooling Capacity 58
8. Sound Levels 59
9. Installation 60
10. Accessories 63

1. Features

= Drastic change of performance, function and design =

Line-up
FXCQ20MVE~FXCQ125MVE

<Features>

Compactness

- Lowest height in the industry with whisper quietness

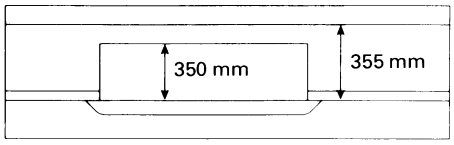

(V0030)

Low operation sound
Less weight

Improvement in installation and design flexibility

- Reduction of weight of both main unit and panel
- Standardized sectional module
- Matching the center of main unit and panel

Less maintenance

- Flat type suction grille of easy cleaning
- Detachable blade
- To minimize the soiling of the ceiling

<Details>

(1) Main technical improvement for compactness

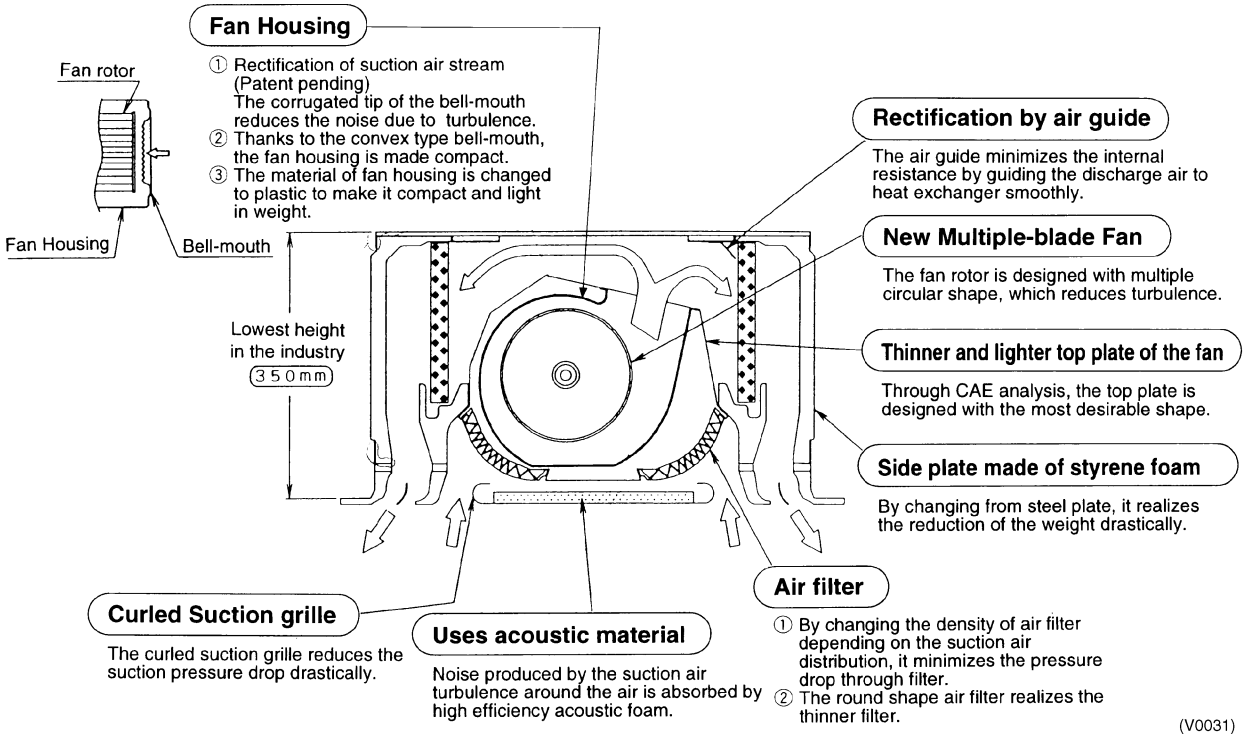

(V0031)

(2) Improvements for facilitating the installation and maintenance

Facilitating the installation

- **Lighter in weight**
  (Main unit and panel)
- **Center of the ceiling opening and the unit.**
  The same position
- **Checking the drainage flow**
  The cover of inspection hatch is detachable with one touch.
- **Facilitating the checking of drainage**

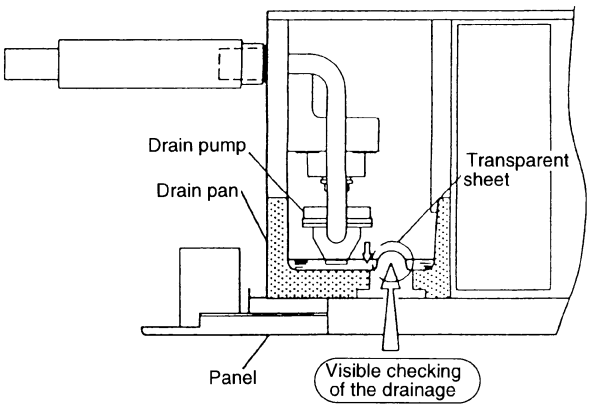

(V0032)

Facilitating the maintenance

- **Soiling of the ceiling**
  About 1/5 of the conventional model
- **Cleaning of the suction grille**
  Easy to clean because of flat shape
- **Cleaning of the air discharge flap (Detachability)**
  The flap can be detached with one touch without removing the panel
- **Detachment of air discharge flap**

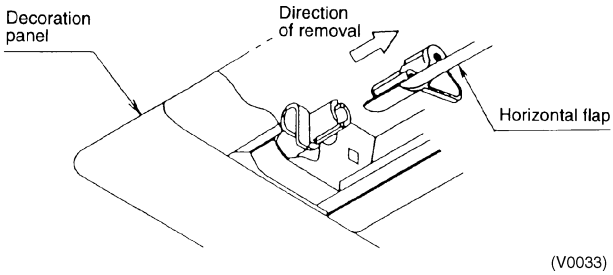

(V0033)

- **2 different positions of auto-swing for more comfort.**

Position of Auto-Swing	Standard Position	Ceiling Soiling Prevention Position
Operation of Auto-Swing	(V0034) Flaps swing within the range of 0°~60°	
5 Steps of Direction	(V1226) 5 steps within the range of 0°~60°	(V0036) 5 steps within the range of 45°~60°
Prevention of Draft	(V0037) Prevents cold draft (heating operation)	—
Auto-set Air Direction	(V0038) The position of flaps is automatically set at the position of previous operation. (Initial position is 30° for cooling, and 60° for heating.)	

2. Specifications

Ceiling Mounted Cassette Type (Double-Flow)

Model			FXCQ20MVE	FXCQ25MVE	FXCQ32MVE	FXCQ40MVE
*1 Cooling Capacity (19.5°CWB)		kcal/h	2,000	2,500	3,200	4,000
		Btu/h	7,800	9,900	12,600	16,000
		kW	2.3	2.9	3.7	4.7
*2 Cooling Capacity (19.0°CWB)		kW	2.2	2.8	3.6	4.5
Casing			Galvanized Steel Plate	Galvanized Steel Plate	Galvanized Steel Plate	Galvanized Steel Plate
Dimensions: (H×W×D)		mm	305×775×600	305×775×600	305×775×600	305×990×600
Coil (Cross Fin Coil)	Rows×Stages×Fin Pitch	mm	2×10×1.5	2×10×1.5	2×10×1.5	2×10×1.5
	Face Area	m^2	2×0.100	2×0.100	2×0.100	2×0.145
Fan	Model		D17K2AA1	D17K2AB1	D17K2AB1	2D17K1AA1
	Type		Sirocco Fan	Sirocco Fan	Sirocco Fan	Sirocco Fan
	Motor Output × Number of Units	W	10×1	15×1	15×1	20×1
	Air Flow Rate (H/L)	m^3/min	7/5	9/6.5	9/6.5	12/9
		cfm	247/177	318/230	318/230	424/318
	Drive		Direct Drive	Direct Drive	Direct Drive	Direct Drive
Temperature Control			Microprocessor Thermostat for Cooling and Heating	Microprocessor Thermostat for Cooling and Heating	Microprocessor Thermostat for Cooling and Heating	Microprocessor Thermostat for Cooling and Heating
Sound Absorbing Thermal Insulation Material			Glass Wool/Urethane Foam	Glass Wool/Urethane Foam	Glass Wool/Urethane Foam	Glass Wool/Urethane Foam
Piping Connections	Liquid Pipes	mm	ϕ6.4 (Flare Connection)	ϕ6.4 (Flare Connection)	ϕ6.4 (Flare Connection)	ϕ6.4 (Flare Connection)
	Gas Pipes	mm	ϕ12.7 (Flare Connection)	ϕ12.7 (Flare Connection)	ϕ12.7 (Flare Connection)	ϕ12.7 (Flare Connection)
	Drain Pipe	mm	VP25 (External Dia. 32 Internal Dia. 25)	VP25 (External Dia. 32 Internal Dia. 25)	VP25 (External Dia. 32 Internal Dia. 25)	VP25 (External Dia. 32 Internal Dia. 25)
Machine Weight (Mass)		kg	26	26	26	31
*4 Sound Level (H/L) (220V)		dBA	32/27	34/28	34/28	34/29
Safety Devices			Fuse. Thermal Protector for Fan Motor.	Fuse. Thermal Protector for Fan Motor.	Fuse. Thermal Protector for Fan Motor.	Fuse. Thermal Protector for Fan Motor.
Refrigerant Control			Electronic Expansion Valve	Electronic Expansion Valve	Electronic Expansion Valve	Electronic Expansion Valve
Connectable Outdoor Unit			R-410A P Series	R-410A P Series	R-410A P Series	R-410A P Series
Decoration Panels (Option)	Model		BYBC32G-W1	BYBC32G-W1	BYBC32G-W1	BYBC50G-W1
	Panel Color		White (10Y9/0.5)	White (10Y9/0.5)	White (10Y9/0.5)	White (10Y9/0.5)
	Dimensions: (H×W×D)	mm	53×1,030×680	53×1,030×680	53×1,030×680	53×1,245×680
	Air Filter		Resin Net (with Mold Resistant)	Resin Net (with Mold Resistant)	Resin Net (with Mold Resistant)	Resin Net (with Mold Resistant)
	Weight	kg	8	8	8	8.5
Standard Accessories			Operation Manual. Installation Manual. Paper Pattern for Installation. Washer for Hanging Brackets. Clamp Metal. Drain Hose. Insulation for Fitting. Washer Fixing Plates. Sealing Pads. Clamps. Screws. Washers.	Operation Manual. Installation Manual. Paper Pattern for Installation. Washer for Hanging Brackets. Clamp Metal. Drain Hose. Insulation for Fitting. Washer Fixing Plates. Sealing Pads. Clamps. Screws. Washers.	Operation Manual. Installation Manual. Paper Pattern for Installation. Washer for Hanging Brackets. Clamp Metal. Drain Hose. Insulation for Fitting. Washer Fixing Plates. Sealing Pads. Clamps. Screws. Washers.	Operation Manual. Installation Manual. Paper Pattern for Installation. Washer for Hanging Brackets. Clamp Metal. Drain Hose. Insulation for Fitting. Washer Fixing Plates. Sealing Pads. Clamps. Screws. Washers.
Drawing No.			C : 3D039413			

Note:

*1 Indoor temp. : 27°CDB, 19.5°CWB / outdoor temp. : 35°CDB / Equivalent piping length : 7.5 m, level difference : 0 m.

*2 Indoor temp. : 27°CDB, 19.0°CWB / outdoor temp. : 35°CDB / Equivalent piping length : 7.5 m, level difference : 0 m.

3 Capacities are net, including a deduction for cooling (an addition for heating) for indoor fan motor heat.

*4 Anechoic chamber conversion value, measured at a point 1.5 m downward from the unit center. During actual operation, these values are normally somewhat higher as a result of ambient conditions.

5 Refer to page 57 for Fan Motor Input.

Conversion Formulae
kcal/h=kW×860 Btu/h=kW×3412 cfm=m^3/min×35.3

Ceiling Mounted Cassette Type (Double-Flow)

Model			FXCQ50MVE	FXCQ63MVE	FXCQ80MVE	FXCQ125MVE
*1 Cooling Capacity (19.5°CWB)		kcal/h	5,000	6,300	8,000	12,500
		Btu/h	19,800	24,900	31,700	49,500
		kW	5.8	7.3	9.3	14.5
*2 Cooling Capacity (19.0°CWB)		kW	5.6	7.1	9.0	14.0
Casing			Galvanized Steel Plate	Galvanized Steel Plate	Galvanized Steel Plate	Galvanized Steel Plate
Dimensions: (H×W×D)		mm	305×990×600	305×1,175×600	305×1,665×600	305×1,665×600
Coil (Cross Fin Coil)	Rows×Stages×Fin Pitch	mm	2×10×1.5	2×10×1.5	2×10×1.5	2×10×1.5
	Face Area	m^2	2×0.145	2×0.184	2×0.287	2×0.287
Fan	Model		2D17K1AA1	2D17K2AA1VE	3D17K2AA1	3D17K2AB1
	Type		Sirocco Fan	Sirocco Fan	Sirocco Fan	Sirocco Fan
	Motor Output × Number of Units	W	20×1	30×1	50×1	85×1
	Air Flow Rate (H/L)	m^3/min	12/9	16.5/13	26/21	33/25
		cfm	424/318	582/459	918/741	1,165/883
	Drive		Direct Drive	Direct Drive	Direct Drive	Direct Drive
Temperature Control			Microprocessor Thermostat for Cooling and Heating	Microprocessor Thermostat for Cooling and Heating	Microprocessor Thermostat for Cooling and Heating	Microprocessor Thermostat for Cooling and Heating
Sound Absorbing Thermal Insulation Material			Glass Wool/Urethane Foam	Glass Wool/Urethane Foam	Glass Wool/Urethane Foam	Glass Wool/Urethane Foam
Piping Connections	Liquid Pipes	mm	φ6.4 (Flare Connection)	φ9.5 (Flare Connection)	φ9.5 (Flare Connection)	φ9.5 (Flare Connection)
	Gas Pipes	mm	φ12.7 (Flare Connection)	φ15.9 (Flare Connection)	φ15.9 (Flare Connection)	φ15.9 (Flare Connection)
	Drain Pipe	mm	VP25 (External Dia. 32 Internal Dia. 25)	VP25 (External Dia. 32 Internal Dia. 25)	VP25 (External Dia. 32 Internal Dia. 25)	VP25 (External Dia. 32 Internal Dia. 25)
Machine Weight (Mass)		kg	32	35	47	48
*4 Sound Level (H/L) (220V)		dBA	34/29	37/32	39/34	44/38
Safety Devices			Fuse. Thermal Protector for Fan Motor.	Fuse. Thermal Protector for Fan Motor.	Fuse. Thermal Protector for Fan Motor.	Fuse. Thermal Protector for Fan Motor.
Refrigerant Control			Electronic Expansion Valve	Electronic Expansion Valve	Electronic Expansion Valve	Electronic Expansion Valve
Connectable Outdoor Unit			R-410A P Series	R-410A P Series	R-410A P Series	R-410A P Series
Decoration Panels (Option)	Model		BYBC50G-W1	BYBC63G-W1	BYBC125G-W1	BYBC125G-W1
	Panel Color		White (10Y9/0.5)	White (10Y9/0.5)	White (10Y9/0.5)	White (10Y9/0.5)
	Dimensions: (H×W×D)	mm	53×1,245×680	53×1,430×680	53×1,920×680	53×1,920×680
	Air Filter		Resin Net (with Mold Resistant)	Resin Net (with Mold Resistant)	Resin Net (with Mold Resistant)	Resin Net (with Mold Resistant)
	Weight	kg	8.5	9.5	12	12
Standard Accessories			Operation Manual. Installation Manual. Paper Pattern for Installation. Washer for Hanging Brackets. Clamp Metal. Drain Hose. Insulation for Fitting. Washer Fixing Plates. Sealing Pads. Clamps. Screws. Washers.	Operation Manual. Installation Manual. Paper Pattern for Installation. Washer for Hanging Brackets. Clamp Metal. Drain Hose. Insulation for Fitting. Washer Fixing Plates. Sealing Pads. Clamps. Screws. Washers.	Operation Manual. Installation Manual. Paper Pattern for Installation. Washer for Hanging Brackets. Clamp Metal. Drain Hose. Insulation for Fitting. Washer Fixing Plates. Sealing Pads. Clamps. Screws. Washers.	Operation Manual. Installation Manual. Paper Pattern for Installation. Washer for Hanging Brackets. Clamp Metal. Drain Hose. Insulation for Fitting. Washer Fixing Plates. Sealing Pads. Clamps. Screws. Washers.
Drawing No.			C : 3D039413			

Note:

*1 Indoor temp. : 27°CDB, 19.5°CWB / outdoor temp. : 35°CDB / Equivalent piping length : 7.5 m, level difference : 0 m.
*2 Indoor temp. : 27°CDB, 19.0°CWB / outdoor temp. : 35°CDB / Equivalent piping length : 7.5 m, level difference : 0 m.
3 Capacities are net, including a deduction for cooling (an addition for heating) for indoor fan motor heat.
*4 Anechoic chamber conversion value, measured at a point 1.5 m downward from the unit center. During actual operation, these values are normally somewhat higher as a result of ambient conditions.
5 Refer to page 57 for Fan Motor Input.

Conversion Formulae
kcal/h=kW×860 Btu/h=kW×3412 cfm=m^3/min×35.3

3. Dimensions

FXCQ20M + BYBC32G-W1 (Decoration Panel)
FXCQ25M + BYBC32G-W1 (Decoration Panel)
FXCQ32M + BYBC32G-W1 (Decoration Panel)

Unit (mm)

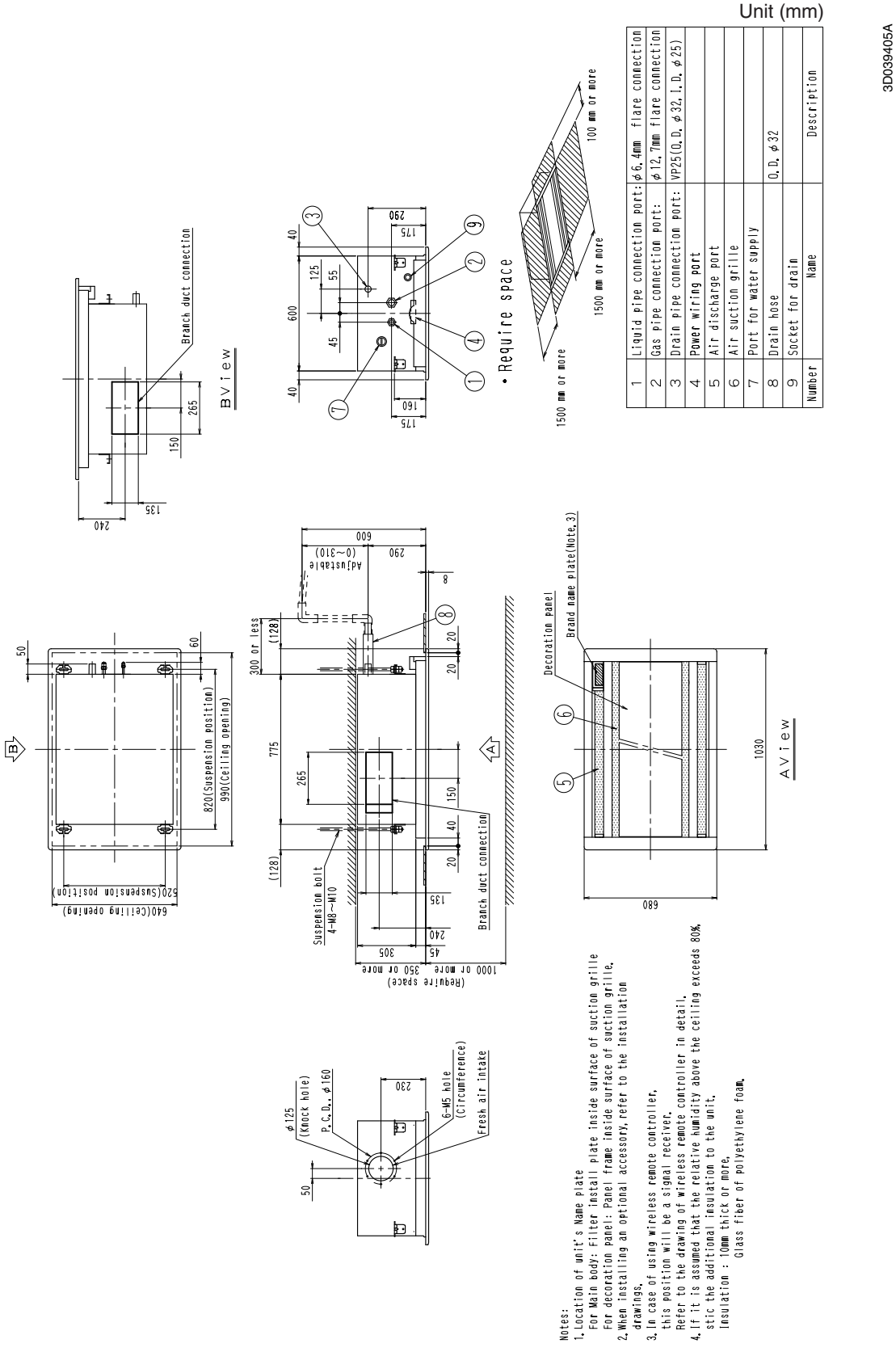

Number	Name	Description
1	Liquid pipe connection port:	φ6.4mm flare connection
2	Gas pipe connection port:	φ12.7mm flare connection
3	Drain pipe connection port:	VP25(O.D. φ32, I.D. φ25)
4	Power wiring port	
5	Air discharge port	
6	Air suction grille	
7	Port for water supply	
8	Drain hose	O.D. φ32
9	Socket for drain	

2

FXCQ40M + BYBC50G-W1 (Decoration Panel)
FXCQ50M + BYBC50G-W1 (Decoration Panel)

Unit (mm)

3D039406A

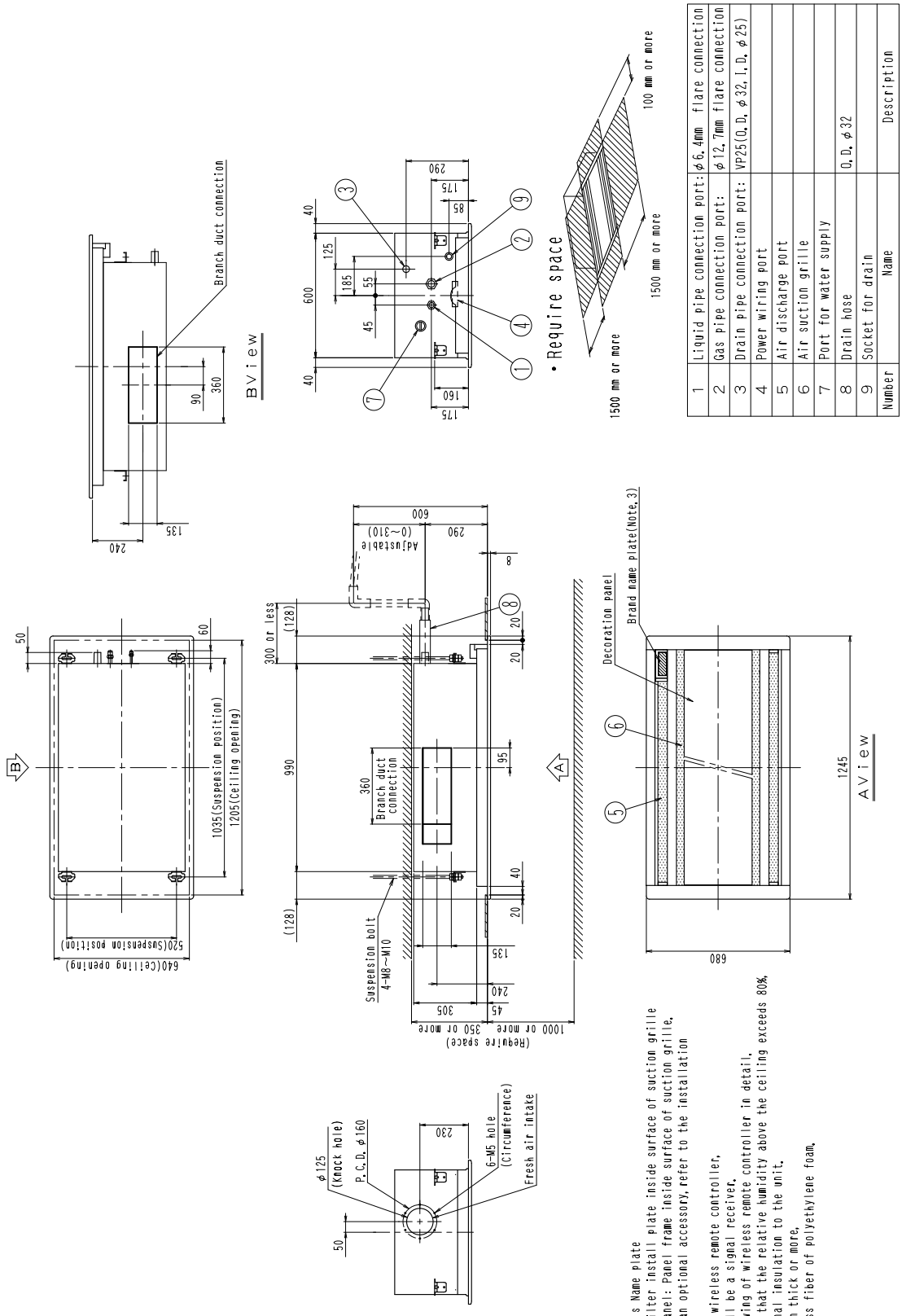

Number	Name	Description
1	Liquid pipe connection port:	φ6.4mm flare connection
2	Gas pipe connection port:	φ12.7mm flare connection
3	Drain pipe connection port:	VP25(O.D. φ32, I.D. φ25)
4	Power wiring port	
5	Air discharge port	
6	Air suction grille	
7	Port for water supply	
8	Drain hose	O.D. φ32
9	Socket for drain	

Notes:
1. Location of unit's Name plate
   For Main body: Filter install plate inside surface of suction grille
   For decoration panel: Panel frame inside surface of suction grille.
2. When installing an optional accessory, refer to the installation drawings.
3. In case of using wireless remote controller, this position will be a signal receiver. Refer to the drawing of wireless remote controller in detail.
4. If it is assumed that the relative humidity above the ceiling exceeds 80%, stic the additional insulation to the unit.
   Insulation : 10mm thick or more.
   Glass fiber of polyethylene foam.

FXCQ63M + BYBC63G-W1 (Decoration Panel)

Unit (mm)

3D039407A

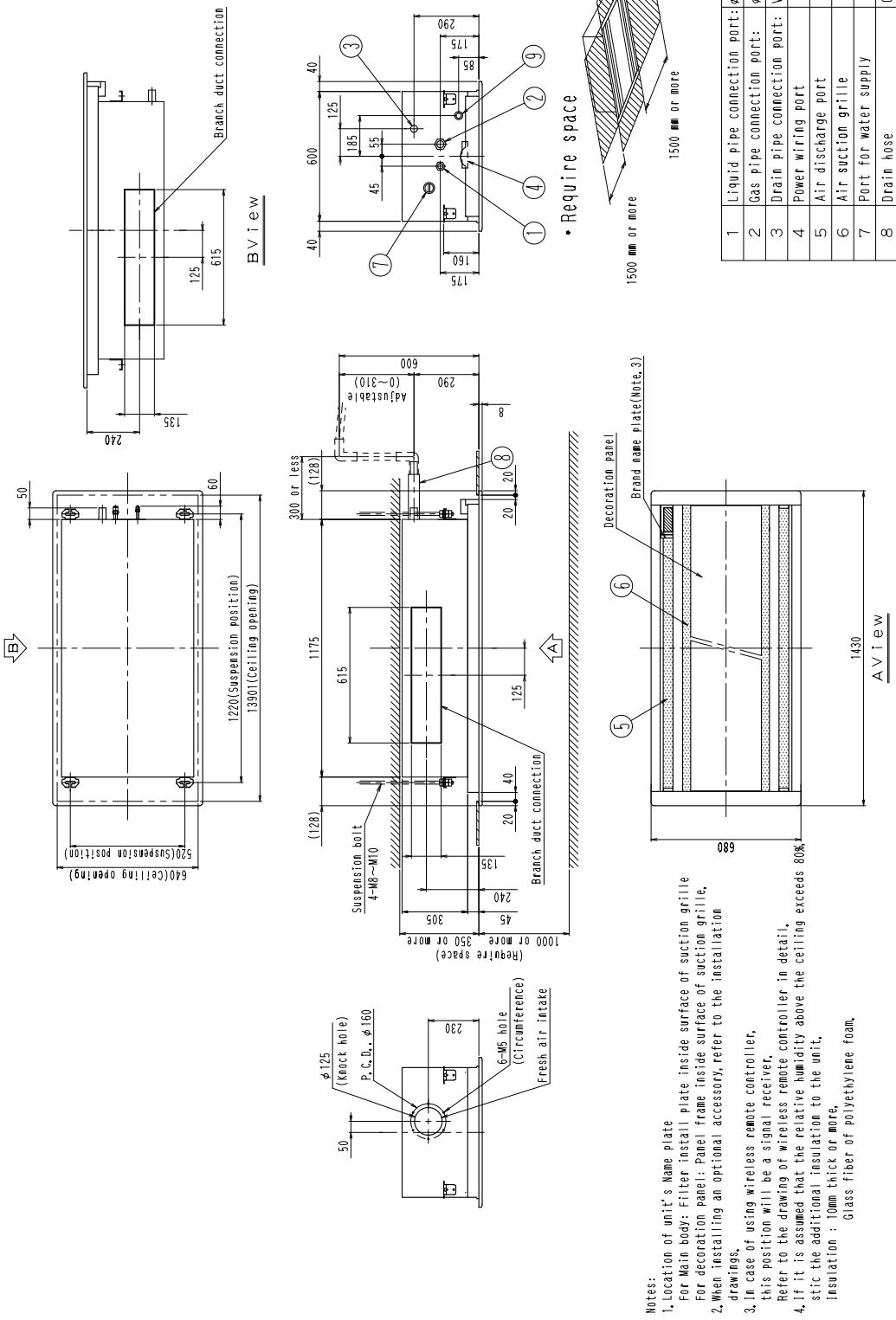

Number	Name	Description
1	Liquid pipe connection port:	φ9.5mm flare connection
2	Gas pipe connection port:	φ15.9mm flare connection
3	Drain pipe connection port:	VP25(O.D. φ32, I.D. φ25)
4	Power wiring port	
5	Air discharge port	
6	Air suction grille	
7	Port for water supply	
8	Drain hose	O.D. φ32
9	Socket for drain	

Notes:
1. Location of unit's Name Plate
   For Main body: Filter install plate inside surface of suction grille
   For decoration panel: Panel frame inside surface of suction grille.
2. When installing an optional accessory, refer to the installation drawings.
3. In case of using wireless remote controller, this position will be a signal receiver. Refer to the drawing of wireless remote controller in detail.
4. If it is assumed that the relative humidity above the ceiling exceeds 80%, stic the additional insulation to the unit.
   Insulation : 10mm thick or more, Glass fiber of polyethylene foam.

2

FXCQ80M + BYBC125G-W1 (Decoration Panel)
FXCQ125M + BYBC125G-W1 (Decoration Panel)

Unit (mm)

3D039409A

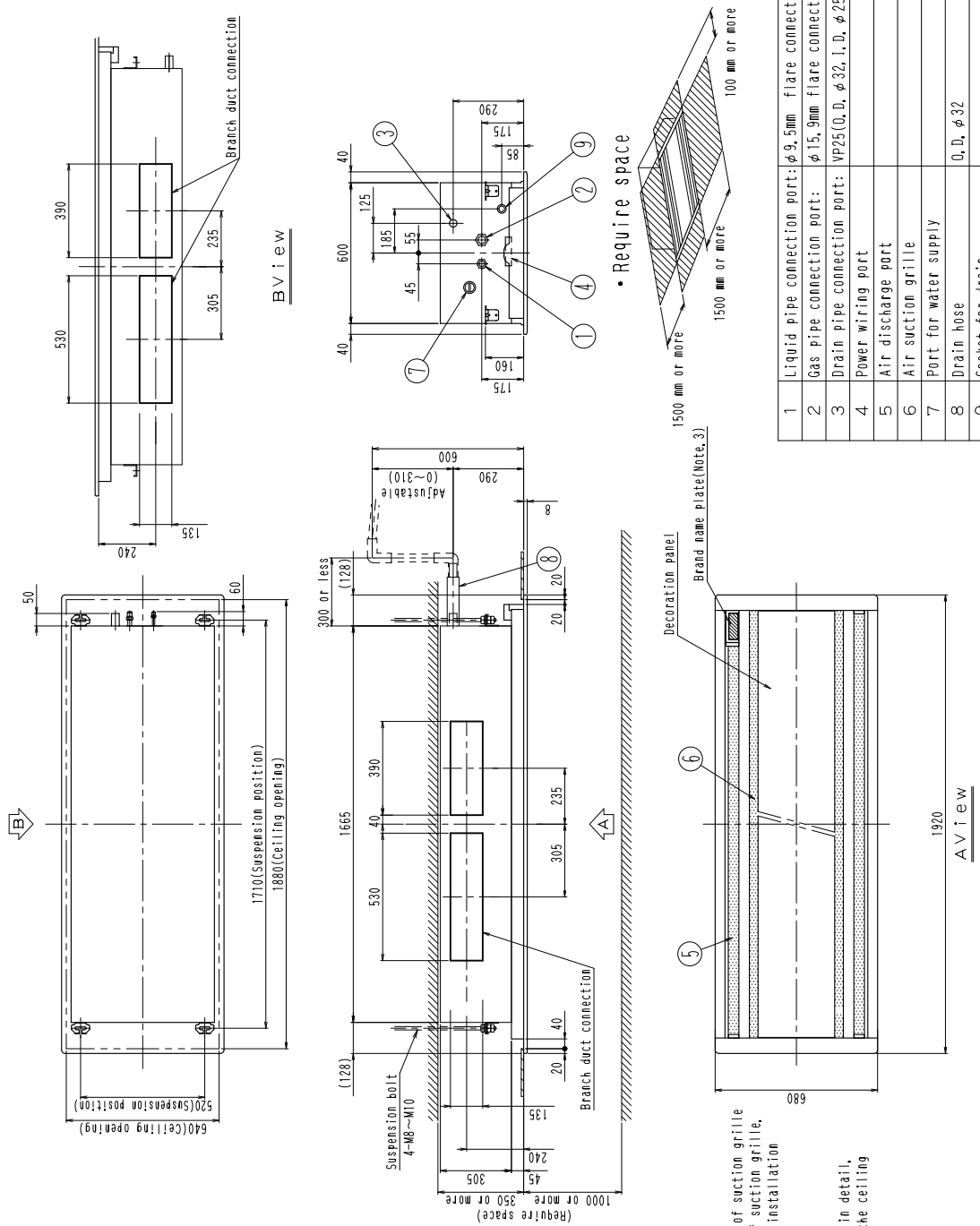

Number	Name	Description
1	Liquid pipe connection port:	φ9.5mm flare connection
2	Gas pipe connection port:	φ15.9mm flare connection
3	Drain pipe connection port:	VP25(O.D. φ32, I.D. φ25)
4	Power wiring port	
5	Air discharge port	
6	Air suction grille	
7	Port for water supply	
8	Drain hose	O.D. φ32
9	Socket for drain	

Notes:
1. Location of unit's Name plate
   For Main body: Filter install plate inside surface of suction grille
   For decoration panel: Panel frame inside surface of suction grille.
2. When installing an optional accessory, refer to the installation drawings.
3. In case of using wireless remote controller, this position will be a signal receiver. Refer to the drawing of wireless remote controller in detail.
4. If it is assumed that the relative humidity above the ceiling exceeds 80%, stic the additional insulation to the unit.
   Insulation : 10mm thick or more.
   Glass fiber of polyethylene foam.

4. Piping Diagrams

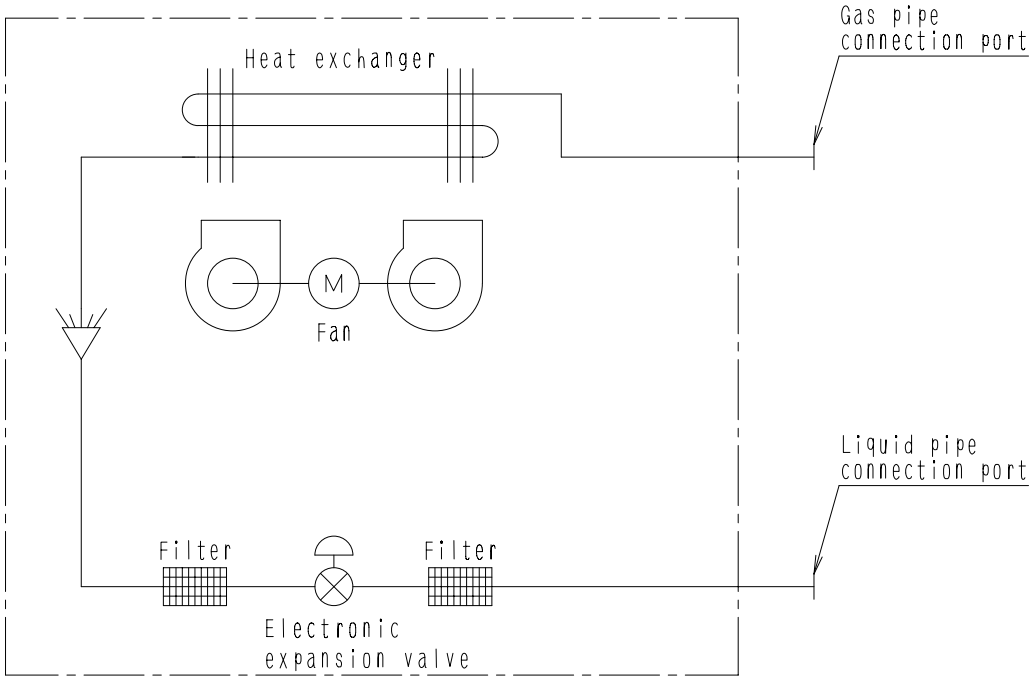

4D034245

■ **Refrigerant pipe connection port diameters**

(mm)

Model	Gas	Liquid
FXCQ20 · 25 · 32 · 40 · 50M	ϕ12.7	ϕ6.4
FXCQ63 · 80 · 125M	ϕ15.9	ϕ9.5

5. Wiring Diagrams

2

FXCQ20 · 25 · 32 · 63MVE

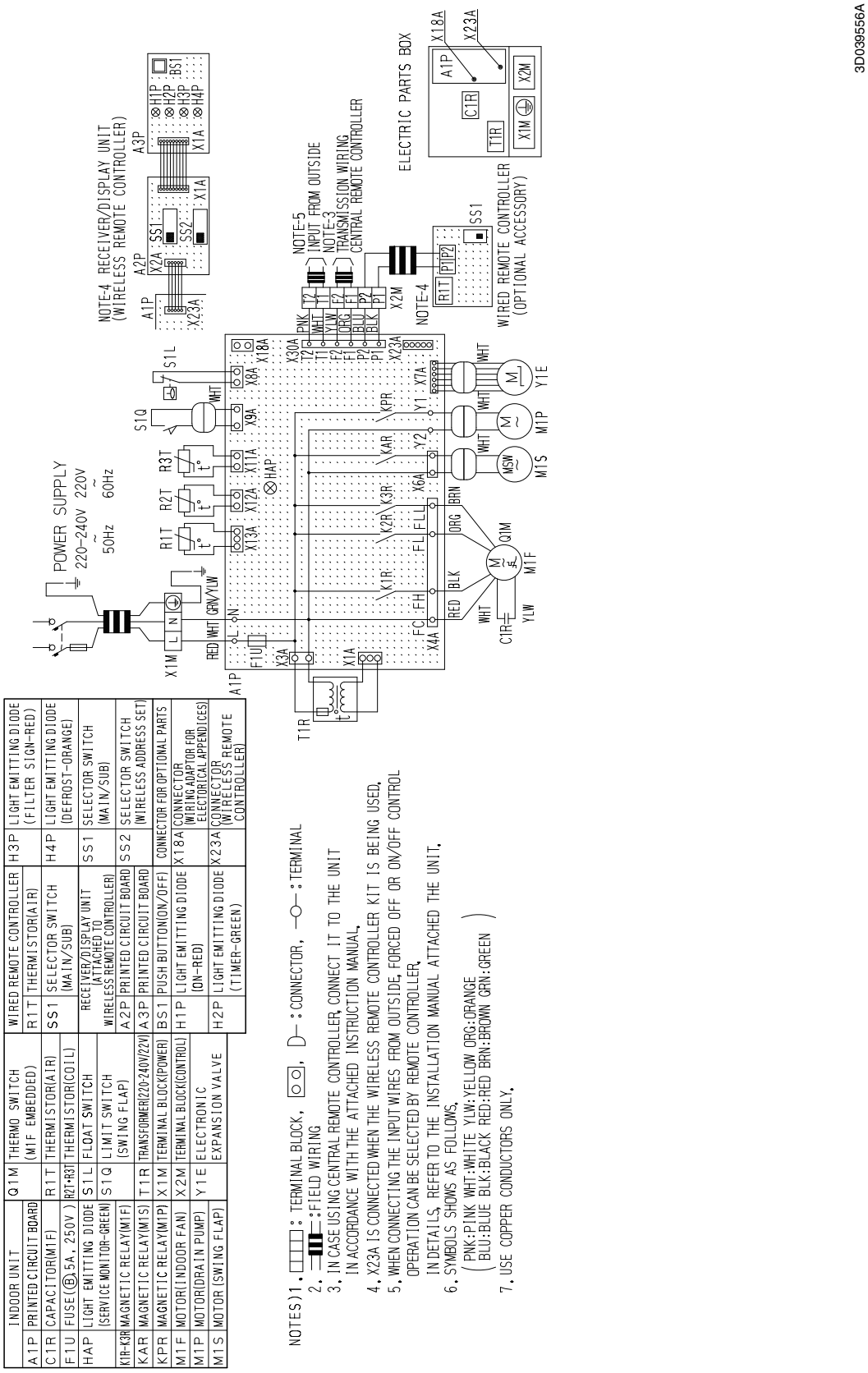

FXCQ40 · 50 · 80 · 125MVE

3D039557A

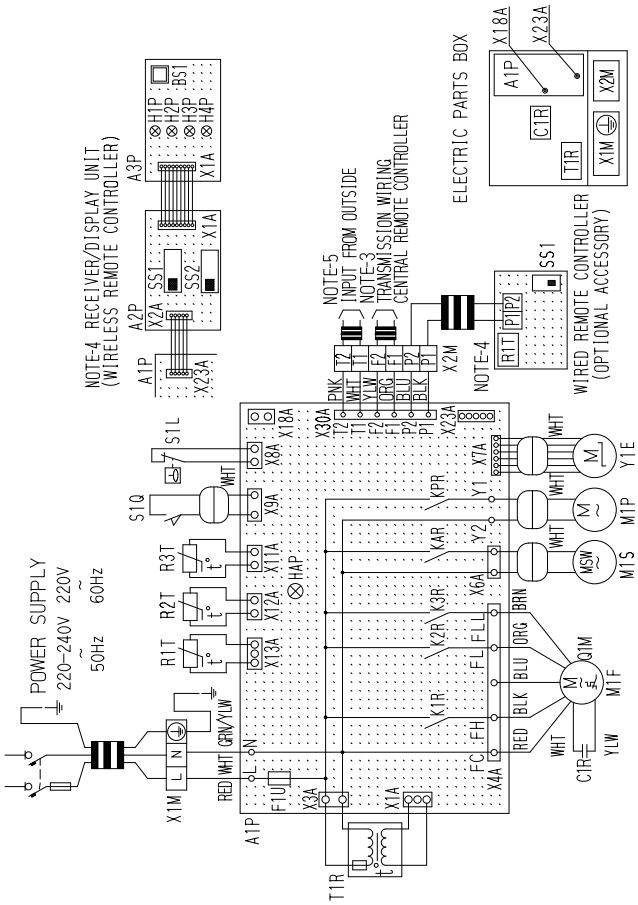

	INDOOR UNIT				
A1P	PRINTED CIRCUIT BOARD	S1L	FLOAT SWITCH	H1P	LIGHT EMITTING DIODE (ON-RED)
C1R	CAPACITOR(M1F)	S1Q	LIMIT SWITCH (SWING FLAP)	H2P	LIGHT EMITTING DIODE (TIMER-GREEN)
F1U	FUSE(Ⓑ5A, 250V)	T1R	TRANSFORMER(220-240V/22V)		
HAP	LIGHT EMITTING DIODE (SERVICE MONITOR-GREEN)	X1M	TERMINAL BLOCK(POWER)	H3P	LIGHT EMITTING DIODE (FILTER SIGN-RED)
		X2M	TERMINAL BLOCK(CONTROL)		
K1R·K3R	MAGNETIC RELAY(M1F)	Y1E	ELECTRONIC EXPANSION VALVE	H4P	LIGHT EMITTING DIODE (DEFROST-ORANGE)
KAR	MAGNETIC RELAY(M1S)				
KPR	MAGNETIC RELAY(M1P)	WIRED REMOTE CONTROLLER		SS1	SELECTOR SWITCH (MAIN/SUB)
M1F	MOTOR(INDOOR FAN)	R1T	THERMISTOR(AIR)		
M1P	MOTOR(DRAIN PUMP)	SS1	SELECTOR SWITCH (MAIN/SUB)	SS2	SELECTOR SWITCH (WIRELESS ADDRESS SET)
M1S	MOTOR (SWING FLAP)				
Q1M	THERMO SWITCH (M1F EMBEDDED)	RECEIVER/DISPLAY UNIT (ATTACHED TO WIRELESS REMOTE CONTROLLER)		CONNECTOR FOR OPTIONAL PARTS	
				X18A	CONNECTOR (WIRING ADAPTOR FOR ELECTORICAL APPENDICES)
R1T	THERMISTOR(AIR)	A2P	PRINTED CIRCUIT BOARD		
R2T·R3T	THERMISTOR(COIL)	A3P	PRINTED CIRCUIT BOARD	X23A	CONNECTOR (WIRELESS REMOTE CONTROLLER)
		BS1	PUSH BUTTON(ON/OFF)		

NOTES) 1. ▭: TERMINAL BLOCK, ⊡, ⊏: CONNECTOR, —○—: TERMINAL
2. ▬: FIELD WIRING
3. IN CASE USING CENTRAL REMOTE CONTROLLER, CONNECT IT TO THE UNIT IN ACCORDANCE WITH THE ATTACHED INSTRUCTION MANUAL.
4. X23A IS CONNECTED WHEN THE WIRELESS REMOTE CONTROLLER KIT IS BEING USED.
5. WHEN CONNECTING THE INPUT WIRES FROM OUTSIDE, FORCED OFF OR ON/OFF CONTROL OPERATION CAN BE SELECTED BY REMOTE CONTROLLER. IN DETAILS, REFER TO THE INSTALLATION MANUAL ATTACHED THE UNIT.
6. SYMBOLS SHOWS AS FOLLOWS.
(PNK:PINK WHT:WHITE YLW:YELLOW ORG:ORANGE
BLU:BLUE BLK:BLACK RED:RED BRN:BROWN GRN:GREEN)
7. USE COPPER CONDUCTORS ONLY.

6. Electric Characteristics

Units					Power supply		IFM		Input(W)	
Model	Type	Hz	Volts	Voltage range	MCA	MFA	KW	FLA	Cooling	Heating
FXCQ20M	VE	50	220-240	MAX. 264 Min. 198	0.5	15	0.010	0.4	77	44
FXCQ25 · 32M					0.5	15	0.015	0.4	92	59
FXCQ40 · 50M					0.8	15	0.020	0.6	130	97
FXCQ63M					0.9	15	0.030	0.7	161	126
FXCQ80M					1.1	15	0.050	0.9	209	176
FXCQ125M					1.3	15	0.085	1.0	256	223

Symbols:

MCA : Min. Circuit Amps (A)
MFA : Max. Fuse Amps (See note 5)
KW : Fan Motor Rated Output(KW)
FLA : Full Load Amps(A)
IFM : Indoor Fan Motor

Note:

1. Voltage range

   Units are suitable for use on electrical systems where voltage supplied to unit terminals is not below or above listed range limits.

2. Maximum allowable voltage unbalance between phases is 2%.

3. MCA/MFA

   MCA = 1.25 X FLA

   MFA ≦ 4 X FLA
   (Next lower standard fuse rating. Min.15A)

4. Select wire size based on the MCA.

5. Instead of fuse, use Circuit Breaker.

C : 4D034243A

7. Capacity Tables

7.1 Cooling Capacity

FXCQ-M **[50Hz]**

Cooling capacity

Unit Size	Outdoor air temp. °CDB	Indoor air temp. 14.0°CWB 20°CDB TC	SC	16.0°CWB 23°CDB TC	SC	18.0°CWB 26°CDB TC	SC	19.0°CWB 27°CDB TC	SC	20.0°CWB 28°CDB TC	SC	22.0°CWB 30°CDB TC	SC	24.0°CWB 32°CDB TC	SC
20	10.0	1.5	1.4	1.8	1.5	2.1	1.7	2.2	1.7	2.3	1.8	2.6	1.7	2.9	1.7
	12.0	1.5	1.4	1.8	1.5	2.1	1.7	2.2	1.7	2.3	1.8	2.6	1.7	2.9	1.7
	14.0	1.5	1.4	1.8	1.5	2.1	1.7	2.2	1.7	2.3	1.8	2.6	1.7	2.8	1.7
	16.0	1.5	1.4	1.8	1.5	2.1	1.7	2.2	1.7	2.3	1.8	2.6	1.7	2.8	1.7
	18.0	1.5	1.4	1.8	1.5	2.1	1.7	2.2	1.7	2.3	1.8	2.6	1.7	2.7	1.7
	20.0	1.5	1.4	1.8	1.5	2.1	1.7	2.2	1.7	2.3	1.8	2.6	1.7	2.7	1.6
	21.0	1.5	1.4	1.8	1.5	2.1	1.7	2.2	1.7	2.3	1.8	2.6	1.7	2.7	1.6
	23.0	1.5	1.4	1.8	1.5	2.1	1.7	2.2	1.7	2.3	1.8	2.6	1.7	2.6	1.6
	25.0	1.5	1.4	1.8	1.5	2.1	1.7	2.2	1.7	2.3	1.8	2.6	1.7	2.6	1.6
	27.0	1.5	1.4	1.8	1.5	2.1	1.7	2.2	1.7	2.3	1.8	2.5	1.7	2.6	1.6
	29.0	1.5	1.4	1.8	1.5	2.1	1.7	2.2	1.7	2.3	1.8	2.5	1.7	2.5	1.6
	31.0	1.5	1.4	1.8	1.5	2.1	1.7	2.2	1.7	2.3	1.8	2.4	1.7	2.5	1.5
	33.0	1.5	1.4	1.8	1.5	2.1	1.7	2.2	1.7	2.3	1.8	2.4	1.6	2.5	1.5
	35.0	1.5	1.4	1.8	1.5	2.1	1.7	2.2	1.7	2.3	1.7	2.4	1.6	2.4	1.5
	37.0	1.5	1.4	1.8	1.5	2.1	1.7	2.2	1.7	2.3	1.7	2.3	1.6	2.4	1.5
	39.0	1.5	1.4	1.8	1.5	2.1	1.7	2.2	1.7	2.2	1.7	2.3	1.6	2.3	1.5
25	10.0	1.9	1.7	2.3	1.9	2.6	2.1	2.8	2.2	3.0	2.2	3.4	2.2	3.7	2.2
	12.0	1.9	1.7	2.3	1.9	2.6	2.1	2.8	2.2	3.0	2.2	3.4	2.2	3.6	2.2
	14.0	1.9	1.7	2.3	1.9	2.6	2.1	2.8	2.2	3.0	2.2	3.4	2.2	3.6	2.2
	16.0	1.9	1.7	2.3	1.9	2.6	2.1	2.8	2.2	3.0	2.2	3.4	2.2	3.5	2.2
	18.0	1.9	1.7	2.3	1.9	2.6	2.1	2.8	2.2	3.0	2.2	3.4	2.2	3.5	2.1
	20.0	1.9	1.7	2.3	1.9	2.6	2.1	2.8	2.2	3.0	2.2	3.4	2.2	3.4	2.1
	21.0	1.9	1.7	2.3	1.9	2.6	2.1	2.8	2.2	3.0	2.2	3.4	2.2	3.4	2.1
	23.0	1.9	1.7	2.3	1.9	2.6	2.1	2.8	2.2	3.0	2.2	3.3	2.2	3.4	2.1
	25.0	1.9	1.7	2.3	1.9	2.6	2.1	2.8	2.2	3.0	2.2	3.3	2.2	3.3	2.1
	27.0	1.9	1.7	2.3	1.9	2.6	2.1	2.8	2.2	3.0	2.2	3.2	2.2	3.3	2.0
	29.0	1.9	1.7	2.3	1.9	2.6	2.1	2.8	2.2	3.0	2.2	3.2	2.1	3.2	2.0
	31.0	1.9	1.7	2.3	1.9	2.6	2.1	2.8	2.2	3.0	2.2	3.1	2.1	3.2	2.0
	33.0	1.9	1.7	2.3	1.9	2.6	2.1	2.8	2.2	3.0	2.2	3.1	2.1	3.1	2.0
	35.0	1.9	1.7	2.3	1.9	2.6	2.1	2.8	2.2	3.0	2.2	3.0	2.1	3.1	1.9
	37.0	1.9	1.7	2.3	1.9	2.6	2.1	2.8	2.2	2.9	2.2	3.0	2.0	3.0	1.9
	39.0	1.9	1.7	2.3	1.9	2.6	2.1	2.8	2.2	2.9	2.2	2.9	2.0	3.0	1.9
32	10.0	2.4	2.1	2.9	2.3	3.4	2.5	3.6	2.6	3.8	2.6	4.3	2.7	4.7	2.7
	12.0	2.4	2.1	2.9	2.3	3.4	2.5	3.6	2.6	3.8	2.6	4.3	2.7	4.7	2.7
	14.0	2.4	2.1	2.9	2.3	3.4	2.5	3.6	2.6	3.8	2.6	4.3	2.7	4.6	2.7
	16.0	2.4	2.1	2.9	2.3	3.4	2.5	3.6	2.6	3.8	2.6	4.3	2.7	4.6	2.6
	18.0	2.4	2.1	2.9	2.3	3.4	2.5	3.6	2.6	3.8	2.6	4.3	2.7	4.5	2.6
	20.0	2.4	2.1	2.9	2.3	3.4	2.5	3.6	2.6	3.8	2.6	4.3	2.7	4.4	2.5
	21.0	2.4	2.1	2.9	2.3	3.4	2.5	3.6	2.6	3.8	2.6	4.3	2.7	4.4	2.5
	23.0	2.4	2.1	2.9	2.3	3.4	2.5	3.6	2.6	3.8	2.6	4.2	2.6	4.3	2.5
	25.0	2.4	2.1	2.9	2.3	3.4	2.5	3.6	2.6	3.8	2.6	4.2	2.6	4.3	2.5
	27.0	2.4	2.1	2.9	2.3	3.4	2.5	3.6	2.6	3.8	2.6	4.1	2.6	4.2	2.4
	29.0	2.4	2.1	2.9	2.3	3.4	2.5	3.6	2.6	3.8	2.6	4.1	2.5	4.2	2.4
	31.0	2.4	2.1	2.9	2.3	3.4	2.5	3.6	2.6	3.8	2.6	4.0	2.5	4.1	2.4
	33.0	2.4	2.1	2.9	2.3	3.4	2.5	3.6	2.6	3.8	2.6	3.9	2.5	4.0	2.4
	35.0	2.4	2.1	2.9	2.3	3.4	2.5	3.6	2.6	3.8	2.6	3.9	2.5	4.0	2.4
	37.0	2.4	2.1	2.9	2.3	3.4	2.5	3.6	2.6	3.7	2.6	3.8	2.5	3.9	2.3
	39.0	2.4	2.1	2.9	2.3	3.4	2.5	3.6	2.6	3.7	2.6	3.8	2.4	3.8	2.3
40	10.0	3.0	2.5	3.6	2.8	4.2	3.1	4.5	3.2	4.8	3.3	5.4	3.3	5.9	3.3
	12.0	3.0	2.5	3.6	2.8	4.2	3.1	4.5	3.2	4.8	3.3	5.4	3.3	5.8	3.3
	14.0	3.0	2.5	3.6	2.8	4.2	3.1	4.5	3.2	4.8	3.3	5.4	3.3	5.8	3.2
	16.0	3.0	2.5	3.6	2.8	4.2	3.1	4.5	3.2	4.8	3.3	5.4	3.3	5.7	3.2
	18.0	3.0	2.5	3.6	2.8	4.2	3.1	4.5	3.2	4.8	3.3	5.4	3.3	5.6	3.2
	20.0	3.0	2.5	3.6	2.8	4.2	3.1	4.5	3.2	4.8	3.3	5.4	3.3	5.5	3.1
	21.0	3.0	2.5	3.6	2.8	4.2	3.1	4.5	3.2	4.8	3.3	5.4	3.3	5.5	3.1
	23.0	3.0	2.5	3.6	2.8	4.2	3.1	4.5	3.2	4.8	3.3	5.3	3.3	5.4	3.1
	25.0	3.0	2.5	3.6	2.8	4.2	3.1	4.5	3.2	4.8	3.3	5.2	3.3	5.3	3.1
	27.0	3.0	2.5	3.6	2.8	4.2	3.1	4.5	3.2	4.8	3.3	5.2	3.2	5.3	3.0
	29.0	3.0	2.5	3.6	2.8	4.2	3.1	4.5	3.2	4.8	3.3	5.1	3.2	5.2	3.0
	31.0	3.0	2.5	3.6	2.8	4.2	3.1	4.5	3.2	4.8	3.3	5.0	3.1	5.1	2.9
	33.0	3.0	2.5	3.6	2.8	4.2	3.1	4.5	3.2	4.8	3.3	4.9	3.1	5.0	2.9
	35.0	3.0	2.5	3.6	2.8	4.2	3.1	4.5	3.2	4.7	3.3	4.9	3.1	5.0	2.9
	37.0	3.0	2.5	3.6	2.8	4.2	3.1	4.5	3.2	4.7	3.2	4.8	3.0	4.9	2.8
	39.0	3.0	2.5	3.6	2.8	4.2	3.1	4.5	3.2	4.6	3.2	4.7	3.0	4.8	2.8

Cooling capacity

Unit Size	Outdoor air temp. °CDB	Indoor air temp. 14.0°CWB 20°CDB TC	SC	16.0°CWB 23°CDB TC	SC	18.0°CWB 26°CDB TC	SC	19.0°CWB 27°CDB TC	SC	20.0°CWB 28°CDB TC	SC	22.0°CWB 30°CDB TC	SC	24.0°CWB 32°CDB TC	SC
50	10.0	3.8	3.1	4.5	3.4	5.2	3.8	5.6	3.9	6.0	4.0	6.7	4.1	7.4	4.0
	12.0	3.8	3.1	4.5	3.4	5.2	3.8	5.6	3.9	6.0	4.0	6.7	4.1	7.3	4.0
	14.0	3.8	3.1	4.5	3.4	5.2	3.8	5.6	3.9	6.0	4.0	6.7	4.1	7.2	4.0
	16.0	3.8	3.1	4.5	3.4	5.2	3.8	5.6	3.9	6.0	4.0	6.7	4.1	7.1	3.9
	18.0	3.8	3.1	4.5	3.4	5.2	3.8	5.6	3.9	6.0	4.0	6.7	4.1	7.0	3.9
	20.0	3.8	3.1	4.5	3.4	5.2	3.8	5.6	3.9	6.0	4.0	6.7	4.1	6.9	3.8
	21.0	3.8	3.1	4.5	3.4	5.2	3.8	5.6	3.9	6.0	4.0	6.7	4.1	6.8	3.8
	23.0	3.8	3.1	4.5	3.4	5.2	3.8	5.6	3.9	6.0	4.0	6.6	4.0	6.7	3.8
	25.0	3.8	3.1	4.5	3.4	5.2	3.8	5.6	3.9	6.0	4.0	6.5	4.0	6.6	3.7
	27.0	3.8	3.1	4.5	3.4	5.2	3.8	5.6	3.9	6.0	4.0	6.4	3.9	6.6	3.7
	29.0	3.8	3.1	4.5	3.4	5.2	3.8	5.6	3.9	6.0	4.0	6.3	3.9	6.5	3.6
	31.0	3.8	3.1	4.5	3.4	5.2	3.8	5.6	3.9	6.0	4.0	6.2	3.8	6.4	3.6
	33.0	3.8	3.1	4.5	3.4	5.2	3.8	5.6	3.9	6.0	4.0	6.1	3.8	6.3	3.6
	35.0	3.8	3.1	4.5	3.4	5.2	3.8	5.6	3.9	5.9	4.0	6.0	3.8	6.2	3.5
	37.0	3.8	3.1	4.5	3.4	5.2	3.8	5.6	3.9	5.8	3.9	5.9	3.7	6.1	3.5
	39.0	3.8	3.1	4.5	3.4	5.2	3.8	5.6	3.9	5.7	3.9	5.8	3.7	6.0	3.4
63	10.0	4.8	3.8	5.7	4.2	6.6	4.7	7.1	4.9	7.6	4.9	8.5	5.0	9.3	5.0
	12.0	4.8	3.8	5.7	4.2	6.6	4.7	7.1	4.9	7.6	4.9	8.5	5.0	9.2	5.0
	14.0	4.8	3.8	5.7	4.2	6.6	4.7	7.1	4.9	7.6	4.9	8.5	5.0	9.1	4.9
	16.0	4.8	3.8	5.7	4.2	6.6	4.7	7.1	4.9	7.6	4.9	8.5	5.0	9.0	4.9
	18.0	4.8	3.8	5.7	4.2	6.6	4.7	7.1	4.9	7.6	4.9	8.5	5.0	8.8	4.8
	20.0	4.8	3.8	5.7	4.2	6.6	4.7	7.1	4.9	7.6	4.9	8.5	5.0	8.7	4.7
	21.0	4.8	3.8	5.7	4.2	6.6	4.7	7.1	4.9	7.6	4.9	8.5	5.0	8.7	4.7
	23.0	4.8	3.8	5.7	4.2	6.6	4.7	7.1	4.9	7.6	4.9	8.4	4.9	8.5	4.6
	25.0	4.8	3.8	5.7	4.2	6.6	4.7	7.1	4.9	7.6	4.9	8.3	4.9	8.4	4.6
	27.0	4.8	3.8	5.7	4.2	6.6	4.7	7.1	4.9	7.6	4.9	8.1	4.8	8.3	4.5
	29.0	4.8	3.8	5.7	4.2	6.6	4.7	7.1	4.9	7.6	4.9	8.0	4.7	8.2	4.5
	31.0	4.8	3.8	5.7	4.2	6.6	4.7	7.1	4.9	7.6	4.9	7.9	4.7	8.1	4.4
	33.0	4.8	3.8	5.7	4.2	6.6	4.7	7.1	4.9	7.6	4.9	7.8	4.6	7.9	4.4
	35.0	4.8	3.8	5.7	4.2	6.6	4.7	7.1	4.9	7.5	4.8	7.7	4.6	7.8	4.4
	37.0	4.8	3.8	5.7	4.2	6.6	4.7	7.1	4.9	7.4	4.8	7.5	4.5	7.7	4.3
	39.0	4.8	3.8	5.7	4.2	6.6	4.7	7.1	4.9	7.2	4.7	7.4	4.5	7.6	4.3
80	10.0	6.1	5.2	7.2	5.7	8.4	6.2	9.0	6.3	9.6	6.5	10.8	6.8	11.8	6.7
	12.0	6.1	5.2	7.2	5.7	8.4	6.2	9.0	6.3	9.6	6.5	10.8	6.8	11.7	6.6
	14.0	6.1	5.2	7.2	5.7	8.4	6.2	9.0	6.3	9.6	6.5	10.8	6.8	11.5	6.6
	16.0	6.1	5.2	7.2	5.7	8.4	6.2	9.0	6.3	9.6	6.5	10.8	6.8	11.4	6.5
	18.0	6.1	5.2	7.2	5.7	8.4	6.2	9.0	6.3	9.6	6.5	10.8	6.8	11.2	6.4
	20.0	6.1	5.2	7.2	5.7	8.4	6.2	9.0	6.3	9.6	6.5	10.8	6.8	11.1	6.3
	21.0	6.1	5.2	7.2	5.7	8.4	6.2	9.0	6.3	9.6	6.5	10.8	6.8	11.0	6.3
	23.0	6.1	5.2	7.2	5.7	8.4	6.2	9.0	6.3	9.6	6.5	10.6	6.7	10.8	6.3
	25.0	6.1	5.2	7.2	5.7	8.4	6.2	9.0	6.3	9.6	6.5	10.5	6.6	10.7	6.2
	27.0	6.1	5.2	7.2	5.7	8.4	6.2	9.0	6.3	9.6	6.5	10.3	6.6	10.5	6.1
	29.0	6.1	5.2	7.2	5.7	8.4	6.2	9.0	6.3	9.6	6.5	10.2	6.5	10.4	6.0
	31.0	6.1	5.2	7.2	5.7	8.4	6.2	9.0	6.3	9.6	6.5	10.0	6.4	10.2	6.0
	33.0	6.1	5.2	7.2	5.7	8.4	6.2	9.0	6.3	9.6	6.5	9.8	6.3	10.1	5.9
	35.0	6.1	5.2	7.2	5.7	8.4	6.2	9.0	6.3	9.5	6.4	9.7	6.3	9.9	5.8
	37.0	6.1	5.2	7.2	5.7	8.4	6.2	9.0	6.3	9.3	6.4	9.5	6.2	9.8	5.7
	39.0	6.1	5.2	7.2	5.7	8.4	6.2	9.0	6.3	9.2	6.3	9.4	6.1	9.6	5.7
125	10.0	9.5	7.8	11.3	8.6	13.1	9.5	14.0	9.7	14.9	9.9	16.8	10.2	18.4	10.3
	12.0	9.5	7.8	11.3	8.6	13.1	9.5	14.0	9.7	14.9	9.9	16.8	10.2	18.2	10.2
	14.0	9.5	7.8	11.3	8.6	13.1	9.5	14.0	9.7	14.9	9.9	16.8	10.2	18.0	10.1
	16.0	9.5	7.8	11.3	8.6	13.1	9.5	14.0	9.7	14.9	9.9	16.8	10.2	17.7	9.9
	18.0	9.5	7.8	11.3	8.6	13.1	9.5	14.0	9.7	14.9	9.9	16.8	10.2	17.5	9.8
	20.0	9.5	7.8	11.3	8.6	13.1	9.5	14.0	9.7	14.9	9.9	16.8	10.2	17.2	9.7
	21.0	9.5	7.8	11.3	8.6	13.1	9.5	14.0	9.7	14.9	9.9	16.8	10.2	17.1	9.6
	23.0	9.5	7.8	11.3	8.6	13.1	9.5	14.0	9.7	14.9	9.9	16.5	10.1	16.9	9.5
	25.0	9.5	7.8	11.3	8.6	13.1	9.5	14.0	9.7	14.9	9.9	16.3	10.0	16.6	9.4
	27.0	9.5	7.8	11.3	8.6	13.1	9.5	14.0	9.7	14.9	9.9	16.1	9.8	16.4	9.3
	29.0	9.5	7.8	11.3	8.6	13.1	9.5	14.0	9.7	14.9	9.9	15.8	9.7	16.2	9.3
	31.0	9.5	7.8	11.3	8.6	13.1	9.5	14.0	9.7	14.9	9.9	15.6	9.6	15.9	9.2
	33.0	9.5	7.8	11.3	8.6	13.1	9.5	14.0	9.7	14.9	9.9	15.3	9.5	15.7	9.1
	35.0	9.5	7.8	11.3	8.6	13.1	9.5	14.0	9.7	14.8	9.9	15.1	9.4	15.4	9.0
	37.0	9.5	7.8	11.3	8.6	13.1	9.5	14.0	9.7	14.5	9.7	14.9	9.3	15.2	8.9
	39.0	9.5	7.8	11.3	8.6	13.1	9.5	14.0	9.8	14.3	9.6	14.6	9.2	15.0	8.8

TC Total capacity ; kW
SC Sensible capacity ; kW

Refer to Outdoor Unit Capacity Tables : on page 411~, 470~, for the actual performance data of each indoor and outdoor unit combination.

8. Sound Levels

Overall

■ **Ceiling Mounted Cassette Type (Double-Flow)**

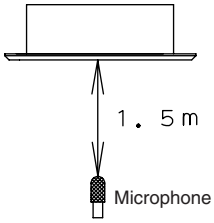

4D034329

Note:

1. The operating conditions are assumed to be standard (JIS conditions).
2. These operating values were obtained in a dead room (conversion values).
   Sound level will vary depending on a range of factors such as the construction (acoustic absorption coefficient) of the particular room in which the equipments installed.

dBA

Model	220V, 50Hz		240V, 50Hz	
	H	L	H	L
FXCQ20M	32	27	34	29
FXCQ25M FXCQ32M	34	28	36	30
FXCQ40M FXCQ50M	34	29	37	32
FXCQ63M	37	32	39	34
FXCQ80M	39	34	41	36
FXCQ125M	44	38	46	40

Octave Band Level

○———○ 220V 50Hz
○- - - -○ 240V 50Hz

FXCQ20MVE

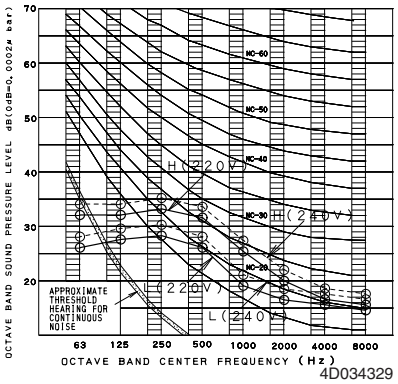

4D034329

FXCQ25 · 32MVE

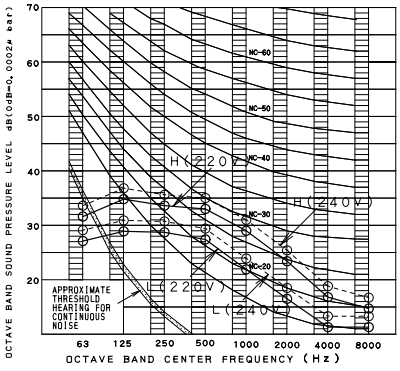

4D034330

FXCQ40 · 50MVE

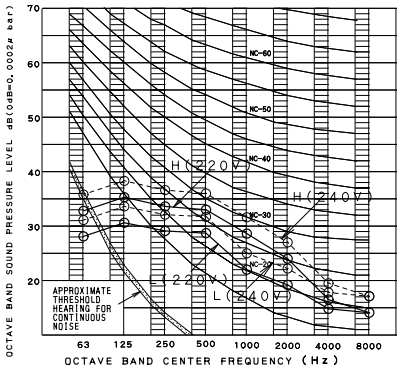

4D034331

FXCQ63MVE

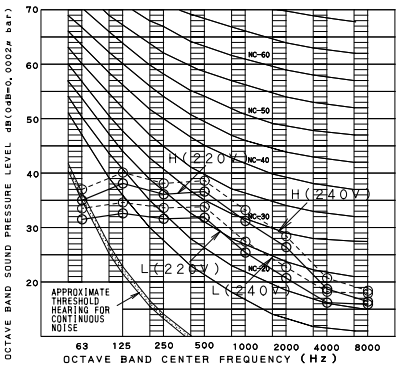

4D034332

FXCQ80MVE

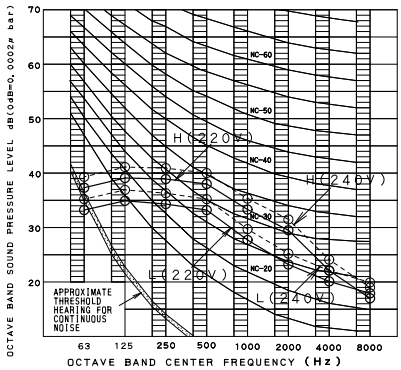

4D034333

FXCQ125MVE

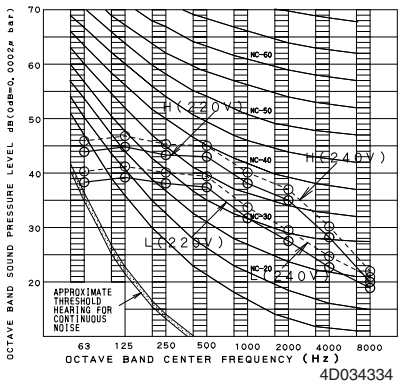

4D034334

9. Installation

Center of Gravity

Unit (mm)

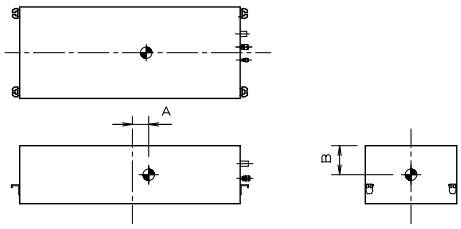

MODEL	A	B
FXCQ20 • 25 • 32MVE	20	140
FXCQ40 • 50MVE	25	
FXCQ63MVE	30	
FXCQ80 • 125MVE	35	150

C : 4D034788A

Service Space

Unit (mm)

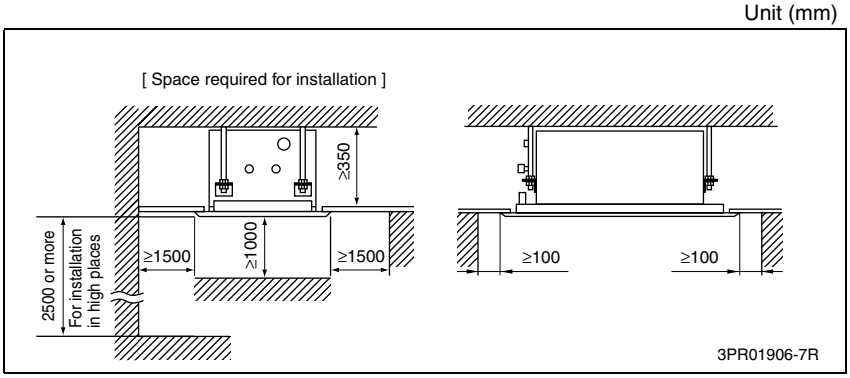

Note:
Above figure means minimum value. Please keep these value at least.

Bolt Pitch

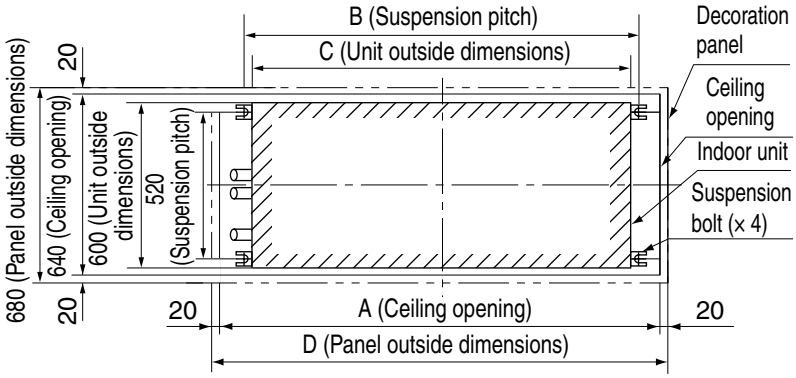

(Unit : mm)

Model	A	B	C	D
FXCQ20 · 25 · 32MVE	990	820	775	1030
FXCQ40 · 50MVE	1205	1035	990	1245
FXCQ63MVE	1390	1220	1175	1430
FXCQ80 · 125MVE	1880	1710	1665	1920

3PR01906-7R

Drain Pump Kit

Indoor unit	Drain pump kit
FXCQ–M	Standard (Equipped with indoor unit)

Drain Piping Work

《Rig the drain pipe as shown below and take measures against condensation. Improperly rigged piping could lead to leaks and eventually wet furniture and belongings.》

(1) Carry out the drain piping

- The diameter of the drain pipe should be greater than or equal to the diameter of the connecting pipe (vinyl tube ; pipe size : 25 mm ; outer dimension : 32 mm).
- Keep the drain pipe short and sloping downwards at a gradient of at least 1 / 100 to prevent air pockets from forming.
- If the drain hose cannot be sufficiently set on a slope, execute the drain raising piping.
- To keep the drain hose from sagging, space hanging wires every 1 to 1.5 m.

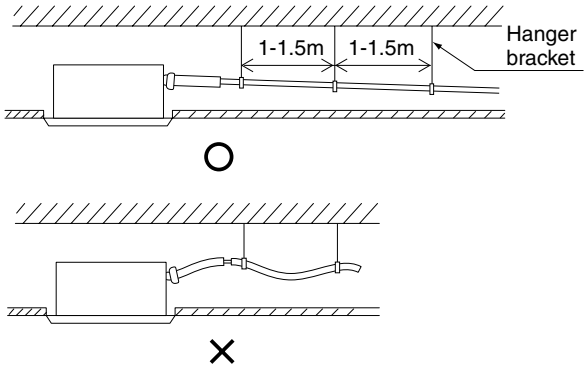

⚠ CAUTION

Setting the unit at an angle opposite to the drain piping might cause leaks.

- Use the drain hose and the metal clamp.
  Insert the drain hose into the drain socket, up to the tape.
  Tighten the clamp until the screw head is less than 4 mm from the hose.
- Wrap the attached sealing pad over the clamp and drain hose to insulate.
- Insulate the drain hose inside the building.

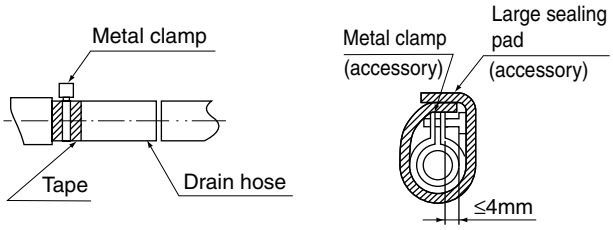

〈 PRECAUTIONS FOR DRAIN RAISING PIPING 〉

- Install the drain raising pipes at a height of less than 310 mm.
- Install the drain raising pipes at a right angle to the indoor unit and no more than 300 mm from the unit.

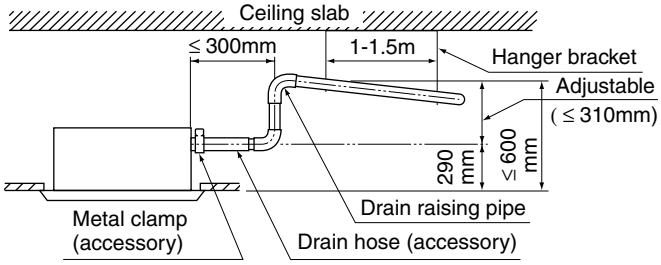

- If converging multiple drain pipes, install according to the procedure shown below.

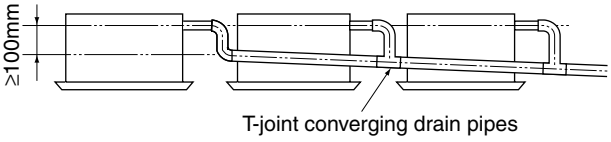

Select converging drain pipes whose gauge is suitable for the operating capacity of the unit.

3PR01906-7R

(2) After piping work is finished, check drainage flows smoothly.

- Open the water inlet lid, add approximately 2.5 liter of water gradually and check drainage flow.

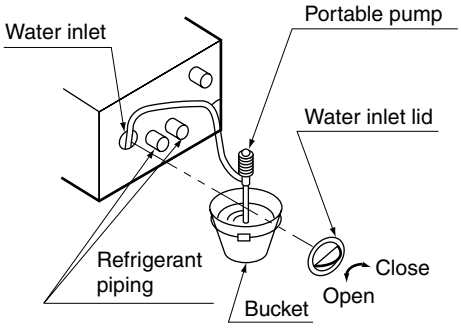

[WHEN ELECTRIC WIRING WORK IS FINISHED]

- Check drainage flow during COOL running, explained under “TEST OPERATION.”

[WHEN ELECTRIC WIRING WORK IS NOT FINISHED]

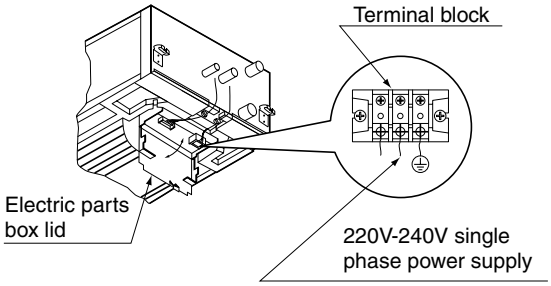

- Remove the electric parts box lid, connect a power supply and remote controller to the terminals. (Refer to the “HOW TO CONNECT WIRINGS”)
  Be sure attach the electric parts box lid before turning on the power.
- Next, press the inspection / test operation button “ TEST ” on the remote controller. The unit will engage the test operation mode. Press the operation mode selector button “ ” until selecting FAN OPERATION “ ”. Then, press the ON / OFF button “ ”. The indoor unit fan and drain pump will start up. Check that the water has drained from the unit. Press “ TEST ” to go back to the first mode.
- **Be careful when doing so because the fan is turning at the same time.**
- Attach the electric parts box lid as before.

CAUTION

- Drain piping connections
  Do not connect the drain piping directly to sewage pipes that smell of ammonia. The ammonia in the sewage might enter the indoor unit through the drain pipes and corrode the heat exchanger.
- Keep in mind that it will become the cause of getting drain pipe blocked if water collects on drain pipe.

3PR01906-7R

10. Accessories

Standard Accessories

FXCQ20~125M

Name	Metal clamp	Paper pattern for installation	Drain hose	Insulation for fitting	Washer fixing plate	Sealing pad
Quantity	1 pc.	1 pc.	1 pc.	1 each	4 pcs.	1 each
Shape				for gas pipe for liquid pipe		Large Small

Name	Washer for hanging bracket	Clamp	Screws (M5)	
Quantity	8 pcs.	8 pcs.	4 pcs.	(Other) • Operation manual • Installation manual
Shape			For paper pattern for installation	

• Screws for fixing panels are attached to decoration panel.

3PR01906-7R

Optional Accessories (For Unit)

Item \ Type		FXCQ20M FXCQ25M FXCQ32M	FXCQ40M	FXCQ50M	FXCQ63M	FXCQ80M	FXCQ125M
Decoration panel		BYBC32G-W1	BYBC50G-W1		BYBC63G-W1	BYBC125G-W1	
Filter related	∗1 High efficiency filter 65%	KAFJ532G36	KAFJ532G56		KAFJ532G80	KAFJ532G160	
	∗1 High efficiency filter 90%	KAFJ533G36	KAFJ533G56		KAFJ533G80	KAFJ533G160	
	Filter chamber / Bottom suction	KDDFJ53G36	KDDFJ53G56		KDDFJ53G80	KDDFJ53G160	
	Long life replacement filter	KAFJ531G36	KAFJ531G56		KAFJ531G80	KAFJ531G160	

3D035093C

Note:

∗1. Filter chamber is required if installing high efficiency filter.

Optional Accessories (For Controls) : Refer to P.561

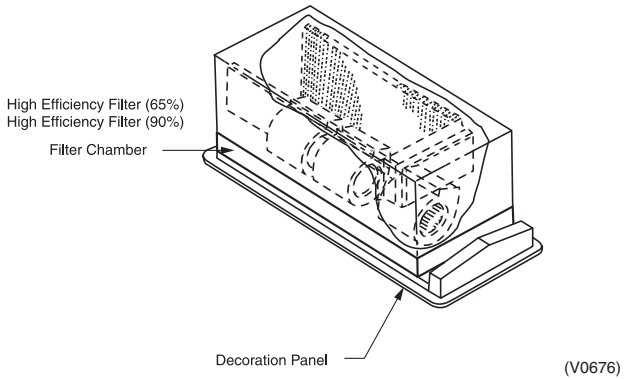

Filter Chamber

Specifications

Item / Model		KDDFJ53G36	KDDFJ53G56	KDDFJ53G80	KDDFJ53G160
External Dimensions (mm)	H	50	50	50	50
	W	780	995	1180	1670
	D	600	600	600	600
Applicable Models		20 · 25 · 32 Class	40 · 50 Class	63 Class	80 · 125 Class

Precaution at use

1. The filter chamber will be needed when the high efficiency filter will be built in. But, it is impossible to build in more than two kinds filter at the same time.

Installation

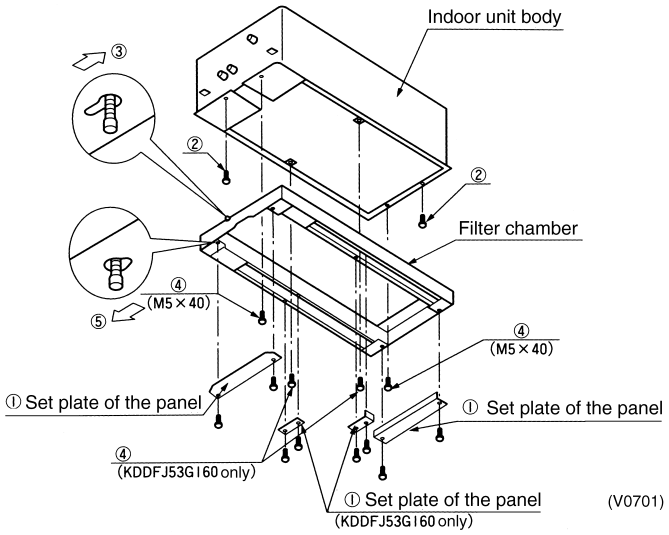

High Efficiency Filter (Filter chamber is required for the high efficiency filter)

Specifications

Item / Model	KAFJ532G36	KAFJ532G56	KAFJ532G80	KAFJ532G160	KAFJ533G36	KAFJ533G56	KAFJ533G80	KAFJ533G160
External Dimensions (H×W×D)(mm)	(30×460×145) ×2	(30×675×145) ×2	(30×860×145) ×2	(30×660×145) ×4	(30×460×145) ×2	(30×675×145) ×2	(30×860×145) ×2	(30×660×145) ×4
Dust Collection Efficiency (%)	65% (Colorimetric method)				90% (Colorimetric method)			
Initial Pressure Loss (Pa)	29			39	39			49
Final Pressure Loss (Pa)	78				78			
Filter	Non-woven fabric of synthetic fiber				Non-woven fabric of synthetic fiber			
Life Time (h) ∗	2500 hours				2500 hours		2100 hours	2000 hours
Applicable Models	20 · 25 · 32 Class	40 · 50 Class	63 Class	80 · 125 Class	20 · 25 · 32 Class	40 · 50 Class	63 Class	80 · 125 Class

Note:

1. ∗ The life time at the dust density 0.15 mg/m³.
2. Replace the fan motor's capacitor in accordance with the guide in next page, when the high efficiency filter is used.

Installation

■ Installation of the filter frame

Attach the filter frame to the indoor unit, where the original filter was located. (Refer to the operation manual of the indoor unit how to remove the standard filter. The standard filter removed shall not be used.)

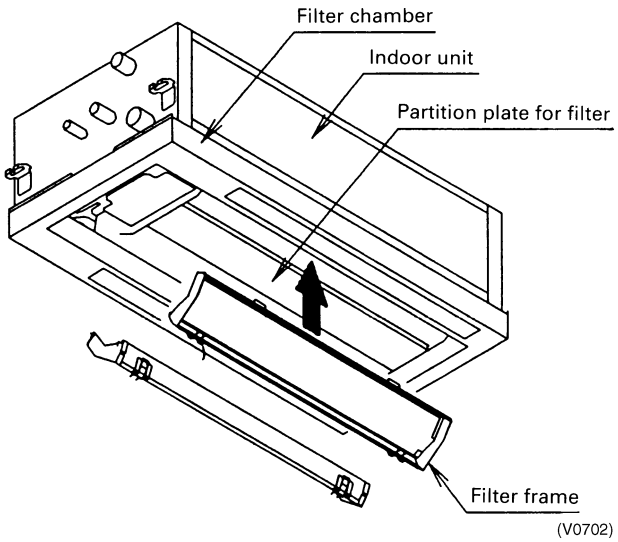

In case of KAFJ532G160 and KAFJ533G160
There are four filter frames of 2 kinds of each having different position of the metal bracket. Install the filter frames to the indoor unit as shown below.

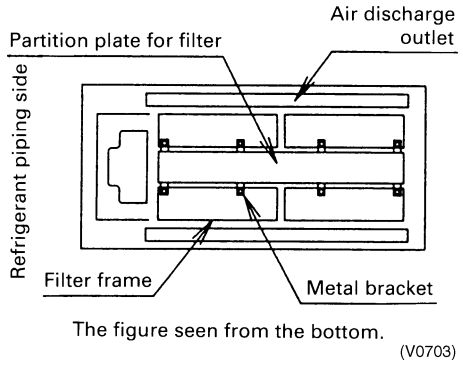

1. Loose the screw of the metal bracket located on each end of the filter frame and hook the filter frame temporarily to the partition plate located at the center of the indoor unit.

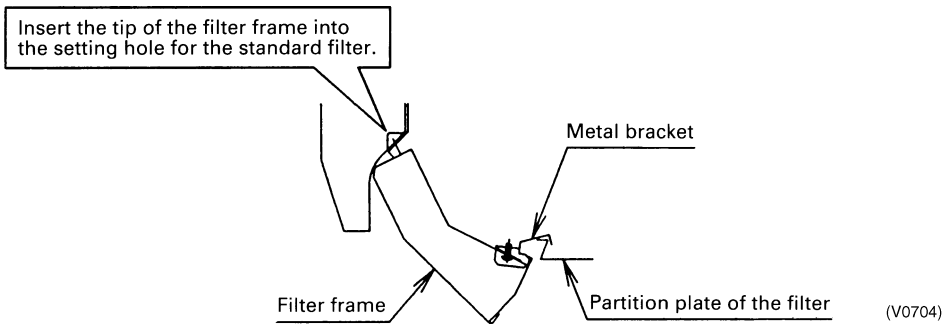

2. Fasten the screw of the metal bracket tightly.

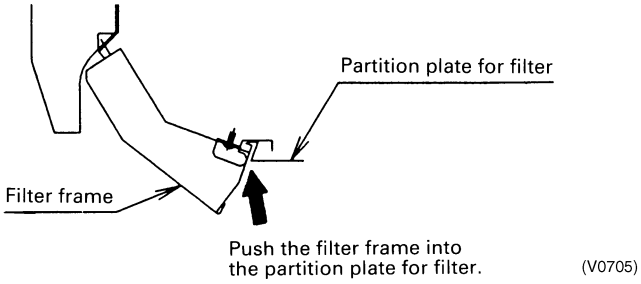

Replacement guide of capacitor for fan motor

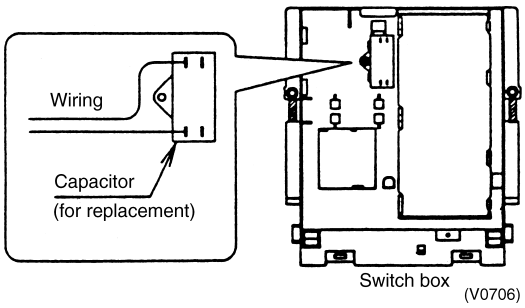

■ Capacity of a capacitor to be replaced.

Model	Capacitor's Capacity	Applicable Models
KAFJ532 · 533G36	2 μF	20 · 25 · 32 Class
KAFJ532 · 533G56	2 μF	40 · 50 Class
KAFJ532 · 533G80	2 μF	63 Class
KAFJ532 · 533G160	4.5 μF	80 Class
	6 μF	125 Class

FXFQ-M
Ceiling Mounted Cassette Type (Multi-Flow)

1. Features 68
2. Specifications 69
3. Dimensions 71
4. Piping Diagrams 74
5. Wiring Diagrams 75
6. Electric Characteristics 76
7. Capacity Tables 77
   7.1 Cooling Capacity 77
8. Fan Performance and Discharge Pattern in case of using Branch Duct 78
9. Sound Levels 81
10. Installation 83
11. Accessories 87

1. Features

External Appearance

New Super Cassette type is compact, quiet and easy to install.

- Regardless of their difference in capacity, all indoor units feature the same panel size and design, in consideration of harmonized interior decor.

- The FXFQ25M-80M are thin models (246mm) which can be installed in narrow false ceilings of at least 265mm depth.

- Because of the light weight, suspension is easy.
- Low operating sound

(220V-240V)(dB(A))

Class	25	32	40	50	63	80	100	125
Operating sound (H/L)	30/27	30/27	31/27	32/27	33(34)★/28	36/31	39/33	42(43)★/36

Note: Operating sound may increase more than that when using with 3-way discharge or 2-way discharge, or when using together with a optional kit.
★: The values of Hi mode Sound level represent those during cooling operation. Those during heating operation are shown in brackets for two models only.

- Provided with high lift drain water lift-up mechanism. (Increased lift of drain pipe up to 750mm from the ceiling.)

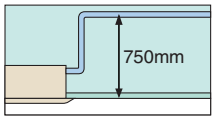

- Installing the fresh air intake is now easier using the new optional kit which requires no special chambers.
- A new long-life filter (maintenance-free period extended from one year to two) is equipped as standard accessory.

- 7 discharge patterns in 2 to 4 directions can be selected to suit the requirements of installation site or the shape of the room.
- The number of installation method using ducts has increased as shown below.

Single branch – 8 patterns

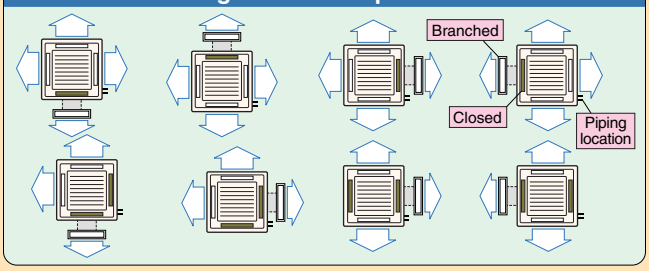

2 branches – 2 patterns

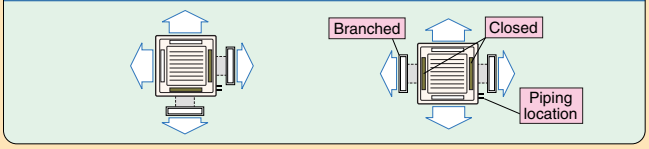

Can also be installed in high ceilings.

		Number of discharge outlets used					
		FXFQ25M-80M			FXFQ100M-125M		
		4-way air discharge	3-way air discharge	2-way air discharge	4-way air discharge	3-way air discharge	2-way air discharge
Ceiling height	Standard	2.7m	3.0m	3.5m	3.2m	3.6m	4.2m
	High ceiling ①	3.0m	3.3m	3.8m	3.6m	4.0m	4.2m
	High ceiling ②	3.5m	3.5m	–	4.2m	4.2m	–

Note: Set standard 4-way discharge when shipped.
High ceiling types① and② will be set for remote control operation

There are 3 patterns in auto swing operation

Pattern 1 Standard setting — *Pattern 2 Draft Prevention setting* — *Pattern 3 Setting to prevent soiling of ceiling*

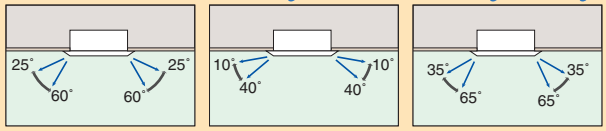

✻ Has been set to standard setting at time of shipment.
This can be changed using the remote control

2. Specifications

Ceiling Mounted Cassette Type (Multi-Flow)

Model			FXFQ25MVE	FXFQ32MVE	FXFQ40MVE	FXFQ50MVE
∗1 Cooling Capacity (19.5°CWB)		kcal/h	2,500	3,200	4,000	5,000
		Btu/h	9,900	12,600	16,000	19,800
		kW	2.9	3.7	4.7	5.8
∗2 Cooling Capacity (19.0°CWB)		kW	2.8	3.6	4.5	5.6
Casing			Galvanized Steel Plate	Galvanized Steel Plate	Galvanized Steel Plate	Galvanized Steel Plate
Dimensions: (H×W×D)		mm	246×840×840	246×840×840	246×840×840	246×840×840
Coil (Cross Fin Coil)	Rows×Stages×Fin Pitch	mm	2×8×1.2	2×8×1.2	2×8×1.2	2×8×1.2
	Face Area	m²	0.363	0.363	0.363	0.363
Fan	Model		QTS46D14M	QTS46D14M	QTS46D14M	QTS46D14M
	Type		Turbo Fan	Turbo Fan	Turbo Fan	Turbo Fan
	Motor Output × Number of Units	W	30×1	30×1	30×1	30×1
	Air Flow Rate (H/L)	m³/min	13/10	13/10	15/11	16/11
		cfm	459/353	459/353	530/388	565/388
	Drive		Direct Drive	Direct Drive	Direct Drive	Direct Drive
Temperature Control			Microprocessor Thermostat for Cooling and Heating	Microprocessor Thermostat for Cooling and Heating	Microprocessor Thermostat for Cooling and Heating	Microprocessor Thermostat for Cooling and Heating
Sound Absorbing Thermal Insulation Material			Polyurethane Form	Polyurethane Form	Polyurethane Form	Polyurethane Form
Piping Connections	Liquid Pipes	mm	ϕ6.4 (Flare Connection)	ϕ6.4 (Flare Connection)	ϕ6.4 (Flare Connection)	ϕ6.4 (Flare Connection)
	Gas Pipes	mm	ϕ12.7 (Flare Connection)	ϕ12.7 (Flare Connection)	ϕ12.7 (Flare Connection)	ϕ12.7 (Flare Connection)
	Drain Pipe	mm	VP25 (External Dia. 32 Internal Dia. 25)	VP25 (External Dia. 32 Internal Dia. 25)	VP25 (External Dia. 32 Internal Dia. 25)	VP25 (External Dia. 32 Internal Dia. 25)
Machine Weight (Mass)		kg	24	24	24	24
∗4 Sound Level (H/L) (220-240V)		dBA	30/27	30/27	31/27	32/27
Safety Devices			Fuse	Fuse	Fuse	Fuse
Refrigerant Control			Electronic Expansion Valve	Electronic Expansion Valve	Electronic Expansion Valve	Electronic Expansion Valve
Connectable Outdoor Unit			R-410A P Series	R-410A P Series	R-410A P Series	R-410A P Series
Decoration Panels (Option)	Model		BYCP125D-W1	BYCP125D-W1	BYCP125D-W1	BYCP125D-W1
	Panel Color		White (10Y9/0.5)	White (10Y9/0.5)	White (10Y9/0.5)	White (10Y9/0.5)
	Dimensions: (H×W×D)	mm	45×950×950	45×950×950	45×950×950	45×950×950
	Air Filter		Resin Net (with Mold Resistant)	Resin Net (with Mold Resistant)	Resin Net (with Mold Resistant)	Resin Net (with Mold Resistant)
	Weight	kg	5.5	5.5	5.5	5.5
Standard Accessories			Operation Manual. Installation Manual. Paper Pattern for Installation. Drain Hose. Clamp Metal. Washer Fixing Plate. Sealing Pads. Clamps. Screws. Washer for Hanging Bracket. Insulation for Fitting.	Operation Manual. Installation Manual. Paper Pattern for Installation. Drain Hose. Clamp Metal. Washer Fixing Plate. Sealing Pads. Clamps. Screws. Washer for Hanging Bracket. Insulation for Fitting.	Operation Manual. Installation Manual. Paper Pattern for Installation. Drain Hose. Clamp Metal. Washer Fixing Plate. Sealing Pads. Clamps. Screws. Washer for Hanging Bracket. Insulation for Fitting.	Operation Manual. Installation Manual. Paper Pattern for Installation. Drain Hose. Clamp Metal. Washer Fixing Plate. Sealing Pads. Clamps. Screws. Washer for Hanging Bracket. Insulation for Fitting.
Drawing No.			C : 3D038812			

Note:

∗1 Indoor temp. : 27°CDB, 19.5°CWB / outdoor temp. : 35°CDB / Equivalent piping length : 7.5 m, level difference : 0 m.
∗2 Indoor temp. : 27°CDB, 19.0°CWB / outdoor temp. : 35°CDB / Equivalent piping length : 7.5 m, level difference : 0 m.
3 Capacities are net, including a deduction for cooling (an addition for heating) for indoor fan motor heat.
∗4 Anechoic chamber conversion value, measured at a point 1.5 m downward from the unit center. During actual operation, these values are normally somewhat higher as a result of ambient conditions.
5 Refer to page 76 for Fan Motor Input.

Conversion Formulae
kcal/h=kW×860 Btu/h=kW×3412 cfm=m³/min×35.3

Ceiling Mounted Cassette Type (Multi-Flow)

Model			FXFQ63MVE	FXFQ80MVE	FXFQ100MVE	FXFQ125MVE
∗1 Cooling Capacity (19.5°CWB)		kcal/h	6,300	8,000	10,000	12,500
		Btu/h	24,900	31,700	39,600	49,500
		kW	7.3	9.3	11.6	14.5
∗2 Cooling Capacity (19.0°CWB)		kW	7.1	9.0	11.2	14.0
Casing			Galvanized Steel Plate	Galvanized Steel Plate	Galvanized Steel Plate	Galvanized Steel Plate
Dimensions: (H×W×D)		mm	246×840×840	246×840×840	288×840×840	288×840×840
Coil (Cross Fin Coil)	Rows×Stages×Fin Pitch	mm	2×10×1.2	2×10×1.2	2×12×1.2	2×12×1.2
	Face Area	m^2	0.454	0.454	0.544	0.544
Fan	Model		QTS46D14M	QTS46D14M	QTS46C17M	QTS46C17M
	Type		Turbo Fan	Turbo Fan	Turbo Fan	Turbo Fan
	Motor Output × Number of Units	W	30×1	30×1	120×1	120×1
	Air Flow Rate (H/L)	m^3/min	18.5/14	20/15	26/21	30/24
		cfm	653/494	706/530	918/741	1,059/847
	Drive		Direct Drive	Direct Drive	Direct Drive	Direct Drive
Temperature Control			Microprocessor Thermostat for Cooling and Heating	Microprocessor Thermostat for Cooling and Heating	Microprocessor Thermostat for Cooling and Heating	Microprocessor Thermostat for Cooling and Heating
Sound Absorbing Thermal Insulation Material			Polyurethane Form	Polyurethane Form	Polyurethane Form	Polyurethane Form
Piping Connections	Liquid Pipes	mm	ϕ9.5 (Flare Connection)	ϕ9.5 (Flare Connection)	ϕ9.5 (Flare Connection)	ϕ9.5 (Flare Connection)
	Gas Pipes	mm	ϕ15.9 (Flare Connection)	ϕ15.9 (Flare Connection)	ϕ15.9 (Flare Connection)	ϕ15.9 (Flare Connection)
	Drain Pipe	mm	VP25 (External Dia. 32 Internal Dia. 25)	VP25 (External Dia. 32 Internal Dia. 25)	VP25 (External Dia. 32 Internal Dia. 25)	VP25 (External Dia. 32 Internal Dia. 25)
Machine Weight (Mass)		kg	25	25	29	29
∗4 Sound Level (H/L) (220-240V)		dBA	33/28	36/31	39/33	42/36
Safety Devices			Fuse	Fuse	Fuse	Fuse
Refrigerant Control			Electronic Expansion Valve	Electronic Expansion Valve	Electronic Expansion Valve	Electronic Expansion Valve
Connectable Outdoor Unit			R-410A P Series	R-410A P Series	R-410A P Series	R-410A P Series
Decoration Panels (Option)	Model		BYCP125D-W1	BYCP125D-W1	BYCP125D-W1	BYCP125D-W1
	Panel Color		White (10Y9/0.5)	White (10Y9/0.5)	White (10Y9/0.5)	White (10Y9/0.5)
	Dimensions: (H×W×D)	mm	45×950×950	45×950×950	45×950×950	45×950×950
	Air Filter		Resin Net (with Mold Resistant)	Resin Net (with Mold Resistant)	Resin Net (with Mold Resistant)	Resin Net (with Mold Resistant)
	Weight	kg	5.5	5.5	5.5	5.5
Standard Accessories			Operation Manual. Installation Manual. Paper Pattern for Installation. Drain Hose. Clamp Metal. Washer Fixing Plate. Sealing Pads. Clamps. Screws. Washer for Hanging Bracket. Insulation for Fitting.	Operation Manual. Installation Manual. Paper Pattern for Installation. Drain Hose. Clamp Metal. Washer Fixing Plate. Sealing Pads. Clamps. Screws. Washer for Hanging Bracket. Insulation for Fitting.	Operation Manual. Installation Manual. Paper Pattern for Installation. Drain Hose. Clamp Metal. Washer Fixing Plate. Sealing Pads. Clamps. Screws. Washer for Hanging Bracket. Insulation for Fitting.	Operation Manual. Installation Manual. Paper Pattern for Installation. Drain Hose. Clamp Metal. Washer Fixing Plate. Sealing Pads. Clamps. Screws. Washer for Hanging Bracket. Insulation for Fitting.
Drawing No.			C : 3D038812			

Note:

∗1 Indoor temp. : 27°CDB, 19.5°CWB / outdoor temp. : 35°CDB / Equivalent piping length : 7.5 m, level difference : 0 m.

∗2 Indoor temp. : 27°CDB, 19.0°CWB / outdoor temp. : 35°CDB / Equivalent piping length : 7.5 m, level difference : 0 m.

3 Capacities are net, including a deduction for cooling (an addition for heating) for indoor fan motor heat.

∗4 Anechoic chamber conversion value, measured at a point 1.5 m downward from the unit center. During actual operation, these values are normally somewhat higher as a result of ambient conditions.

5 Refer to page 76 for Fan Motor Input.

Conversion Formulae
kcal/h=kW×860 Btu/h=kW×3412 cfm=m^3/min×35.3

3. Dimensions

FXFQ25M + BYCP125D-W1(Decoration Panel)
FXFQ32M + BYCP125D-W1(Decoration Panel)
FXFQ40M + BYCP125D-W1(Decoration Panel)
FXFQ50M + BYCP125D-W1(Decoration Panel)

3D038837

Unit (mm)

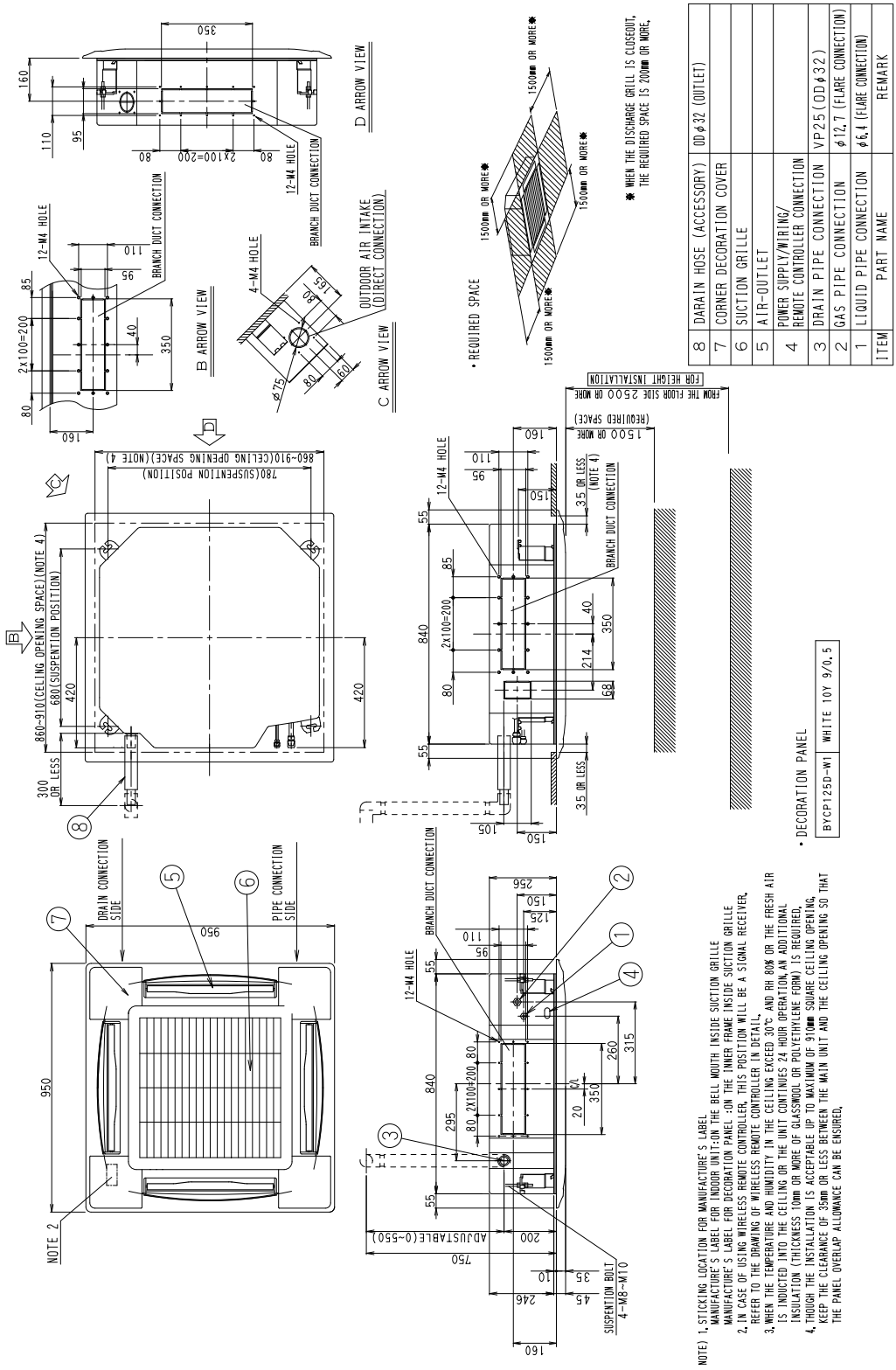

ITEM	PART NAME	REMARK
8	DARAIN HOSE (ACCESSORY)	OD φ32 (OUTLET)
7	CORNER DECORATION COVER	
6	SUCTION GRILLE	
5	AIR-OUTLET	
4	POWER SUPPLY/WIRING/ REMOTE CONTROLLER CONNECTION	
3	DRAIN PIPE CONNECTION	VP25(OD φ32)
2	GAS PIPE CONNECTION	φ12.7 (FLARE CONNECTION)
1	LIQUID PIPE CONNECTION	φ6.4 (FLARE CONNECTION)

NOTE) 1. STICKING LOCATION FOR MANUFACTURE'S LABEL
MANUFACTURE'S LABEL FOR INDOOR UNIT:ON THE BELL MOUTH INSIDE SUCTION GRILLE
MANUFACTURE'S LABEL FOR DECORATION PANEL :ON THE INNER FRAME INSIDE SUCTION GRILLE
2. IN CASE OF USING WIRELESS REMOTE CONTROLLER, THIS POSITION WILL BE A SIGNAL RECEIVER, REFER TO THE DRAWING OF WIRELESS REMOTE CONTROLLER IN DETAIL.
3. WHEN THE TEMPERATURE AND HUMIDITY IN THE CEILING EXCEED 30°C AND RH 80% OR THE FRESH AIR IS INDUCTED INTO THE CEILING OR THE UNIT CONTINUES 24 HOUR OPERATION, AN ADDITIONAL INSULATION (THICKNESS 10mm OR MORE OF GLASSWOOL OR POLYETHYLENE FORM) IS REQUIRED.
4. THOUGH THE INSTALLATION IS ACCEPTABLE UP TO MAXIMUM OF 910mm SQUARE CEILING OPENING, KEEP THE CLEARANCE OF 35mm OR LESS BETWEEN THE MAIN UNIT AND THE CEILING OPENING SO THAT THE PANEL OVERLAP ALLOWANCE CAN BE ENSURED.

FXFQ63M + BYCP125D-W1 (Decoration Panel)
FXFQ80M + BYCP125D-W1 (Decoration Panel)

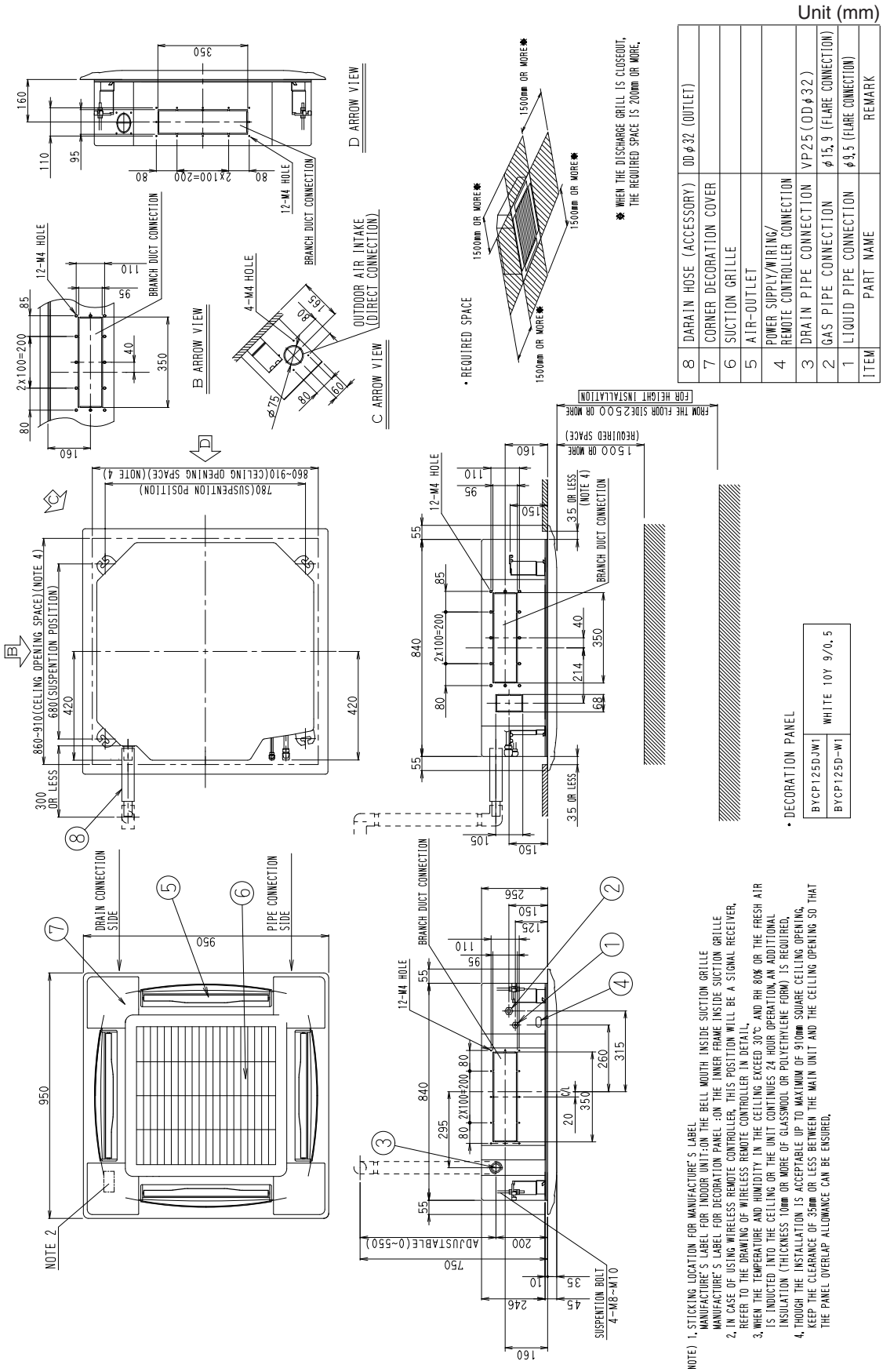

ITEM	PART NAME	REMARK
8	DARAIN HOSE (ACCESSORY)	OD φ32 (OUTLET)
7	CORNER DECORATION COVER	
6	SUCTION GRILLE	
5	AIR-OUTLET	
4	POWER SUPPLY/WIRING/ REMOTE CONTROLLER CONNECTION	
3	DRAIN PIPE CONNECTION	VP25(OD φ32)
2	GAS PIPE CONNECTION	φ15.9 (FLARE CONNECTION)
1	LIQUID PIPE CONNECTION	φ9.5 (FLARE CONNECTION)

FXFQ100M + BYCP125D-W1 (Decoration Panel)
FXFQ125M + BYCP125D-W1 (Decoration Panel)

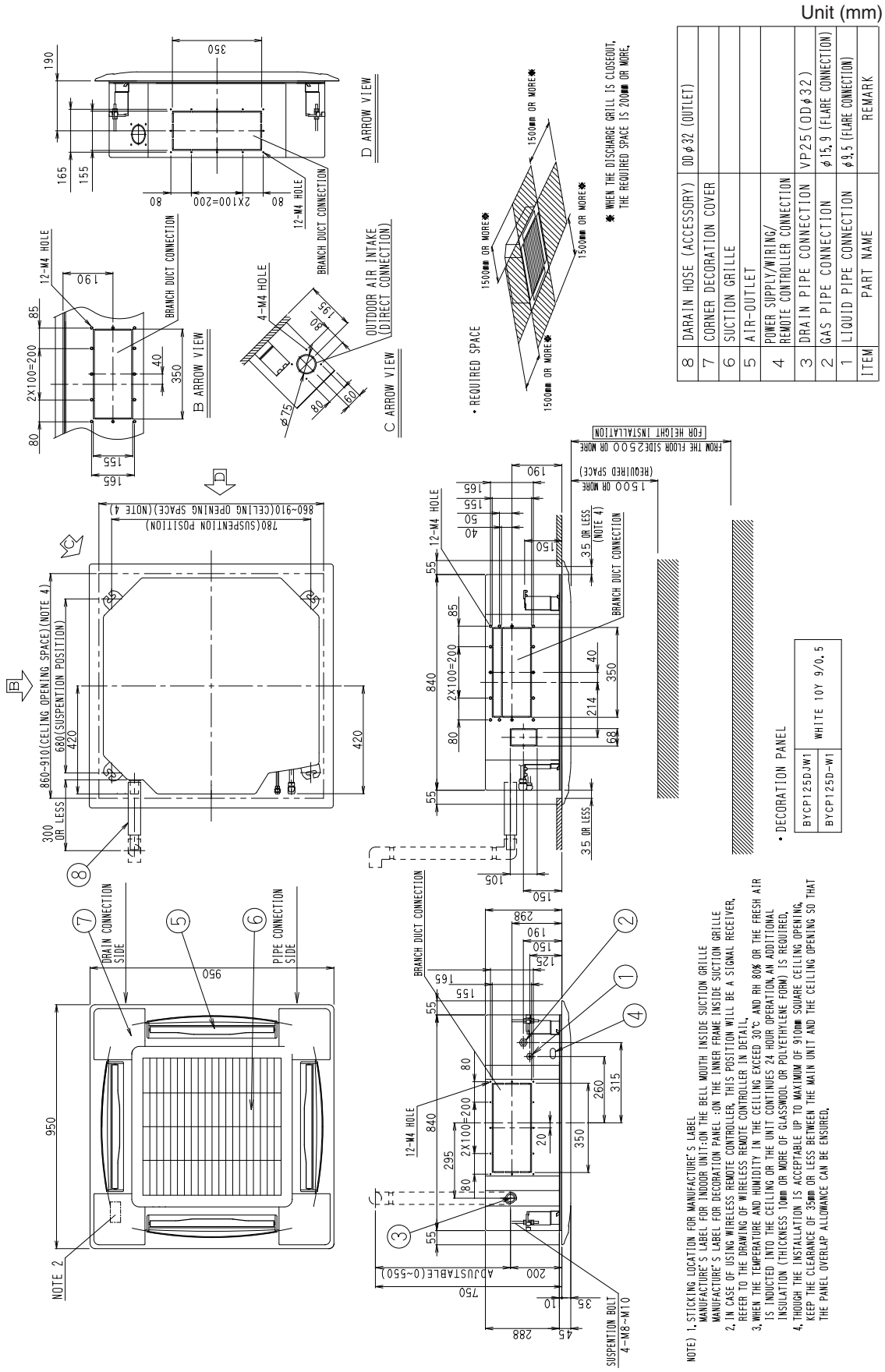

ITEM	PART NAME	REMARK
8	DARAIN HOSE (ACCESSORY)	OD φ32 (OUTLET)
7	CORNER DECORATION COVER	
6	SUCTION GRILLE	
5	AIR-OUTLET	
4	POWER SUPPLY/WIRING/ REMOTE CONTROLLER CONNECTION	
3	DRAIN PIPE CONNECTION	VP25(ODφ32)
2	GAS PIPE CONNECTION	φ15.9 (FLARE CONNECTION)
1	LIQUID PIPE CONNECTION	φ9.5 (FLARE CONNECTION)

4. Piping Diagrams

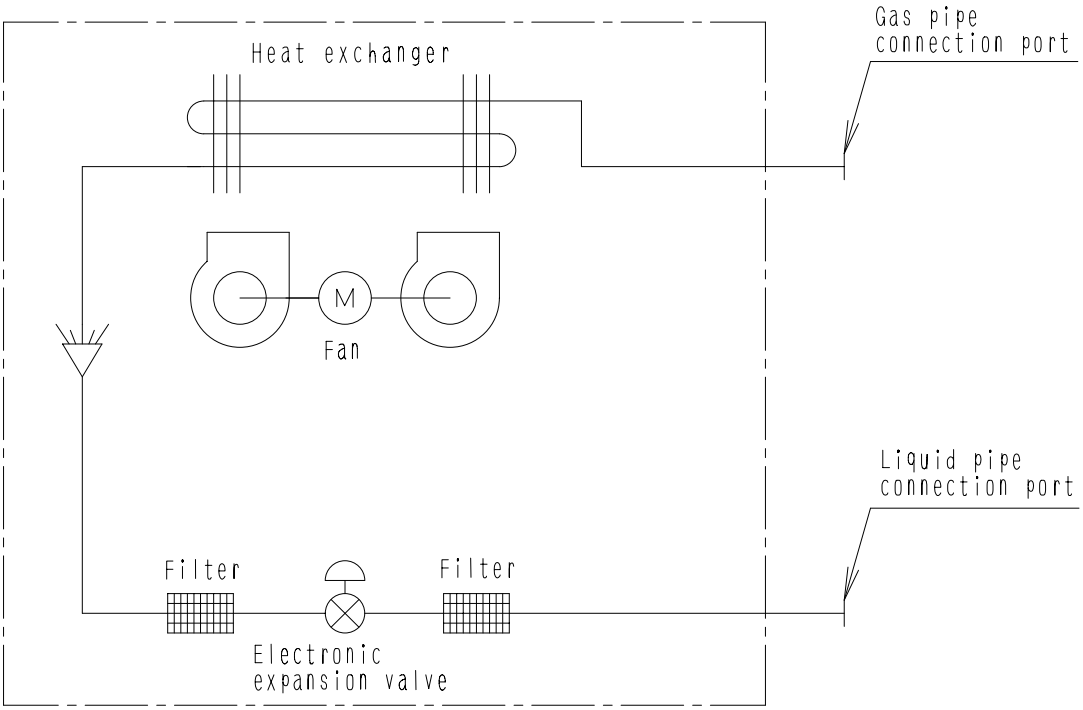

C : 4D024460

■ **Refrigerant pipe connection port diameters**

(mm)

Model	Gas	Liquid
FXFQ25 · 32 · 40 · 50M	ϕ12.7	ϕ6.4
FXFQ63 · 80 · 100 · 125M	ϕ15.9	ϕ9.5

5. Wiring Diagrams

FXFQ25 · 32 · 40 · 50 · 63 · 80 · 100 · 125MVE

3D039600A

3

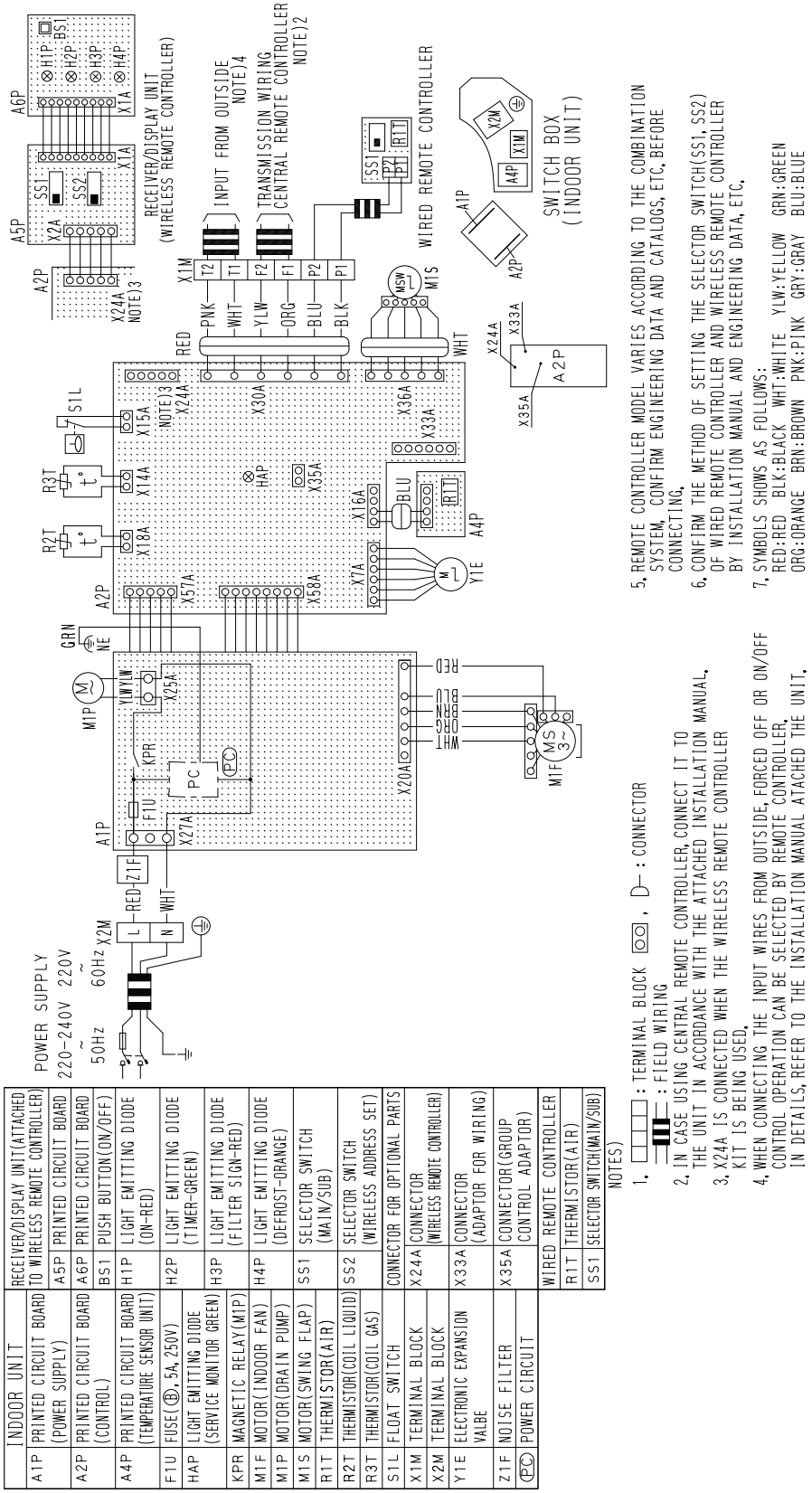

6. Electric Characteristics

Units					Power supply		IFM		Input(W)	
Model	Type	Hz	Volts	Voltage range	MCA	MFA	kW	FLA	Cooling	Heating
FXFQ25M	VE VEC	50	220-240	MAX. 264 Min. 198	0.3	15	0.030	0.2	43	30
FXFQ32M					0.3	15	0.030	0.2	43	30
FXFQ40M					0.3	15	0.030	0.2	47	34
FXFQ50M					0.3	15	0.030	0.2	53	38
FXFQ63M					0.4	15	0.030	0.3	67	54
FXFQ80M					0.5	15	0.030	0.4	94	76
FXFQ100M					0.6	15	0.120	0.5	89	94
FXFQ125M					0.9	15	0.120	0.7	121	125

Symbols:

MCA : Min. Circuit Amps (A)
MFA : Max. Fuse Amps (See note 5)
kW : Fan Motor Rated Output(kW)
FLA : Full Load Amps(A)
IFM : Indoor Fan Motor

Note:

1. Voltage range

   Units are suitable for use on electrical systems where voltage supplied to unit terminals is not below or above listed range limits.

2. Maximum allowable voltage unbalance between phases is 2%.

3. MCA/MFA

   MCA = 1.25 X FLA

   MFA ≦ 4 X FLA

   (Next lower standard fuse rating. Min.15A)

4. Select wire size based on the MCA.

5. Instead of fuse, use Circuit Breaker.

C : 4D034264B

7. Capacity Tables

7.1 Cooling Capacity

FXFQ-M [50Hz]

Cooling capacity

Unit Size	Outdoor air temp. °CDB	Indoor air temp. 14.0°CWB 20°CDB TC	SC	16.0°CWB 23°CDB TC	SC	18.0°CWB 26°CDB TC	SC	19.0°CWB 27°CDB TC	SC	20.0°CWB 28°CDB TC	SC	22.0°CWB 30°CDB TC	SC	24.0°CWB 32°CDB TC	SC
25	10.0	1.9	1.9	2.3	2.1	2.6	2.3	2.8	2.3	3.0	2.3	3.4	2.4	3.7	2.4
	12.0	1.9	1.9	2.3	2.1	2.6	2.3	2.8	2.3	3.0	2.3	3.4	2.4	3.6	2.4
	14.0	1.9	1.9	2.3	2.1	2.6	2.3	2.8	2.3	3.0	2.3	3.4	2.4	3.6	2.3
	16.0	1.9	1.9	2.3	2.1	2.6	2.3	2.8	2.3	3.0	2.3	3.4	2.4	3.5	2.3
	18.0	1.9	1.9	2.3	2.1	2.6	2.3	2.8	2.3	3.0	2.3	3.4	2.4	3.5	2.3
	20.0	1.9	1.9	2.3	2.1	2.6	2.3	2.8	2.3	3.0	2.3	3.4	2.4	3.4	2.2
	21.0	1.9	1.9	2.3	2.1	2.6	2.3	2.8	2.3	3.0	2.3	3.4	2.4	3.4	2.2
	23.0	1.9	1.9	2.3	2.1	2.6	2.3	2.8	2.3	3.0	2.3	3.3	2.3	3.4	2.2
	25.0	1.9	1.9	2.3	2.1	2.6	2.3	2.8	2.3	3.0	2.3	3.3	2.3	3.3	2.2
	27.0	1.9	1.9	2.3	2.1	2.6	2.3	2.8	2.3	3.0	2.3	3.2	2.3	3.3	2.1
	29.0	1.9	1.9	2.3	2.1	2.6	2.3	2.8	2.3	3.0	2.3	3.2	2.2	3.2	2.1
	31.0	1.9	1.9	2.3	2.1	2.6	2.3	2.8	2.3	3.0	2.3	3.1	2.2	3.2	2.1
	33.0	1.9	1.9	2.3	2.1	2.6	2.3	2.8	2.3	3.0	2.3	3.1	2.2	3.1	2.1
	35.0	1.9	1.9	2.3	2.1	2.6	2.3	2.8	2.3	3.0	2.3	3.0	2.2	3.1	2.1
	37.0	1.9	1.9	2.3	2.1	2.6	2.3	2.8	2.3	2.9	2.3	3.0	2.2	3.0	2.1
	39.0	1.9	1.9	2.3	2.1	2.6	2.3	2.8	2.4	2.9	2.3	2.9	2.2	3.0	2.1
32	10.0	2.4	2.4	2.9	2.6	3.4	2.8	3.6	2.9	3.8	2.9	4.3	2.9	4.7	3.0
	12.0	2.4	2.4	2.9	2.6	3.4	2.8	3.6	2.9	3.8	2.9	4.3	2.9	4.7	2.9
	14.0	2.4	2.4	2.9	2.6	3.4	2.8	3.6	2.9	3.8	2.9	4.3	2.9	4.6	2.9
	16.0	2.4	2.4	2.9	2.6	3.4	2.8	3.6	2.9	3.8	2.9	4.3	2.9	4.6	2.8
	18.0	2.4	2.4	2.9	2.6	3.4	2.8	3.6	2.9	3.8	2.9	4.3	2.9	4.5	2.8
	20.0	2.4	2.4	2.9	2.6	3.4	2.8	3.6	2.9	3.8	2.9	4.3	2.9	4.4	2.8
	21.0	2.4	2.4	2.9	2.6	3.4	2.8	3.6	2.9	3.8	2.9	4.3	2.9	4.4	2.8
	23.0	2.4	2.4	2.9	2.6	3.4	2.8	3.6	2.9	3.8	2.9	4.2	2.9	4.3	2.7
	25.0	2.4	2.4	2.9	2.6	3.4	2.8	3.6	2.9	3.8	2.9	4.2	2.8	4.3	2.7
	27.0	2.4	2.4	2.9	2.6	3.4	2.8	3.6	2.9	3.8	2.9	4.1	2.8	4.2	2.7
	29.0	2.4	2.4	2.9	2.6	3.4	2.8	3.6	2.9	3.8	2.9	4.1	2.8	4.2	2.6
	31.0	2.4	2.4	2.9	2.6	3.4	2.8	3.6	2.9	3.8	2.9	4.0	2.7	4.1	2.6
	33.0	2.4	2.4	2.9	2.6	3.4	2.8	3.6	2.9	3.8	2.9	3.9	2.7	4.0	2.6
	35.0	2.4	2.4	2.9	2.6	3.4	2.8	3.6	2.9	3.8	2.9	3.9	2.7	4.0	2.6
	37.0	2.4	2.4	2.9	2.6	3.4	2.8	3.6	2.9	3.7	2.8	3.8	2.7	3.9	2.6
	39.0	2.4	2.4	2.9	2.6	3.4	2.8	3.6	2.9	3.7	2.8	3.8	2.7	3.8	2.6
40	10.0	3.0	2.7	3.6	3.0	4.2	3.3	4.5	3.3	4.8	3.4	5.4	3.5	5.9	3.5
	12.0	3.0	2.7	3.6	3.0	4.2	3.3	4.5	3.3	4.8	3.4	5.4	3.5	5.8	3.4
	14.0	3.0	2.7	3.6	3.0	4.2	3.3	4.5	3.3	4.8	3.4	5.4	3.5	5.8	3.4
	16.0	3.0	2.7	3.6	3.0	4.2	3.3	4.5	3.3	4.8	3.4	5.4	3.5	5.7	3.3
	18.0	3.0	2.7	3.6	3.0	4.2	3.3	4.5	3.3	4.8	3.4	5.4	3.5	5.6	3.3
	20.0	3.0	2.7	3.6	3.0	4.2	3.3	4.5	3.3	4.8	3.4	5.4	3.5	5.5	3.2
	21.0	3.0	2.7	3.6	3.0	4.2	3.3	4.5	3.3	4.8	3.4	5.4	3.5	5.5	3.2
	23.0	3.0	2.7	3.6	3.0	4.2	3.3	4.5	3.3	4.8	3.4	5.3	3.4	5.4	3.2
	25.0	3.0	2.7	3.6	3.0	4.2	3.3	4.5	3.3	4.8	3.4	5.2	3.4	5.3	3.2
	27.0	3.0	2.7	3.6	3.0	4.2	3.3	4.5	3.3	4.8	3.4	5.2	3.3	5.3	3.1
	29.0	3.0	2.7	3.6	3.0	4.2	3.3	4.5	3.3	4.8	3.4	5.1	3.3	5.2	3.1
	31.0	3.0	2.7	3.6	3.0	4.2	3.3	4.5	3.3	4.8	3.4	5.0	3.2	5.1	3.1
	33.0	3.0	2.7	3.6	3.0	4.2	3.3	4.5	3.3	4.8	3.4	4.9	3.2	5.0	3.1
	35.0	3.0	2.7	3.6	3.0	4.2	3.3	4.5	3.3	4.7	3.4	4.9	3.2	5.0	3.0
	37.0	3.0	2.7	3.6	3.0	4.2	3.3	4.5	3.3	4.7	3.3	4.8	3.2	4.9	3.0
	39.0	3.0	2.7	3.6	3.0	4.2	3.3	4.5	3.3	4.6	3.3	4.7	3.1	4.8	3.0
50	10.0	3.8	3.2	4.5	3.6	5.2	3.9	5.6	4.0	6.0	4.1	6.7	4.2	7.4	4.3
	12.0	3.8	3.2	4.5	3.6	5.2	3.9	5.6	4.0	6.0	4.1	6.7	4.2	7.3	4.2
	14.0	3.8	3.2	4.5	3.6	5.2	3.9	5.6	4.0	6.0	4.1	6.7	4.2	7.2	4.2
	16.0	3.8	3.2	4.5	3.6	5.2	3.9	5.6	4.0	6.0	4.1	6.7	4.2	7.1	4.1
	18.0	3.8	3.2	4.5	3.6	5.2	3.9	5.6	4.0	6.0	4.1	6.7	4.2	7.0	4.0
	20.0	3.8	3.2	4.5	3.6	5.2	3.9	5.6	4.0	6.0	4.1	6.7	4.2	6.9	4.0
	21.0	3.8	3.2	4.5	3.6	5.2	3.9	5.6	4.0	6.0	4.1	6.7	4.2	6.8	4.0
	23.0	3.8	3.2	4.5	3.6	5.2	3.9	5.6	4.0	6.0	4.1	6.6	4.2	6.7	3.9
	25.0	3.8	3.2	4.5	3.6	5.2	3.9	5.6	4.0	6.0	4.1	6.5	4.1	6.6	3.9
	27.0	3.8	3.2	4.5	3.6	5.2	3.9	5.6	4.0	6.0	4.1	6.4	4.0	6.6	3.8
	29.0	3.8	3.2	4.5	3.6	5.2	3.9	5.6	4.0	6.0	4.1	6.3	4.0	6.5	3.8
	31.0	3.8	3.2	4.5	3.6	5.2	3.9	5.6	4.0	6.0	4.1	6.2	3.9	6.4	3.8
	33.0	3.8	3.2	4.5	3.6	5.2	3.9	5.6	4.0	6.0	4.1	6.1	3.9	6.3	3.7
	35.0	3.8	3.2	4.5	3.6	5.2	3.9	5.6	4.0	5.9	4.1	6.0	3.9	6.2	3.7
	37.0	3.8	3.2	4.5	3.6	5.2	3.9	5.6	4.0	5.8	4.0	5.9	3.8	6.1	3.7
	39.0	3.8	3.2	4.5	3.6	5.2	3.9	5.6	4.0	5.7	4.0	5.8	3.8	6.0	3.6

Cooling capacity

Unit Size	Outdoor air temp. °CDB	Indoor air temp. 14.0°CWB 20°CDB TC	SC	16.0°CWB 23°CDB TC	SC	18.0°CWB 26°CDB TC	SC	19.0°CWB 27°CDB TC	SC	20.0°CWB 28°CDB TC	SC	22.0°CWB 30°CDB TC	SC	24.0°CWB 32°CDB TC	SC
63	10.0	4.8	4.2	5.7	4.6	6.6	5.1	7.1	5.2	7.6	5.3	8.5	5.5	9.3	5.6
	12.0	4.8	4.2	5.7	4.6	6.6	5.1	7.1	5.2	7.6	5.3	8.5	5.5	9.2	5.5
	14.0	4.8	4.2	5.7	4.6	6.6	5.1	7.1	5.2	7.6	5.3	8.5	5.5	9.1	5.4
	16.0	4.8	4.2	5.7	4.6	6.6	5.1	7.1	5.2	7.6	5.3	8.5	5.5	9.0	5.3
	18.0	4.8	4.2	5.7	4.6	6.6	5.1	7.1	5.2	7.6	5.3	8.5	5.5	8.8	5.3
	20.0	4.8	4.2	5.7	4.6	6.6	5.1	7.1	5.2	7.6	5.3	8.5	5.5	8.7	5.2
	21.0	4.8	4.2	5.7	4.6	6.6	5.1	7.1	5.2	7.6	5.3	8.5	5.5	8.7	5.2
	23.0	4.8	4.2	5.7	4.6	6.6	5.1	7.1	5.2	7.6	5.3	8.4	5.4	8.5	5.1
	25.0	4.8	4.2	5.7	4.6	6.6	5.1	7.1	5.2	7.6	5.3	8.3	5.3	8.4	5.1
	27.0	4.8	4.2	5.7	4.6	6.6	5.1	7.1	5.2	7.6	5.3	8.1	5.3	8.3	5.0
	29.0	4.8	4.2	5.7	4.6	6.6	5.1	7.1	5.2	7.6	5.3	8.0	5.2	8.2	5.0
	31.0	4.8	4.2	5.7	4.6	6.6	5.1	7.1	5.2	7.6	5.3	7.9	5.1	8.1	4.9
	33.0	4.8	4.2	5.7	4.6	6.6	5.1	7.1	5.2	7.6	5.3	7.8	5.1	7.9	4.9
	35.0	4.8	4.2	5.7	4.6	6.6	5.1	7.1	5.2	7.5	5.3	7.7	5.0	7.8	4.8
	37.0	4.8	4.2	5.7	4.6	6.6	5.1	7.1	5.2	7.4	5.2	7.5	5.0	7.7	4.8
	39.0	4.8	4.2	5.7	4.6	6.6	5.1	7.1	5.3	7.2	5.2	7.4	4.9	7.6	4.7
80	10.0	6.1	5.3	7.2	6.1	8.4	6.7	9.0	7.0	9.6	7.1	10.8	7.3	11.8	7.4
	12.0	6.1	5.3	7.2	6.1	8.4	6.7	9.0	7.0	9.6	7.1	10.8	7.3	11.7	7.3
	14.0	6.1	5.3	7.2	6.1	8.4	6.7	9.0	7.0	9.6	7.1	10.8	7.3	11.5	7.2
	16.0	6.1	5.3	7.2	6.1	8.4	6.7	9.0	7.0	9.6	7.1	10.8	7.3	11.4	7.1
	18.0	6.1	5.3	7.2	6.1	8.4	6.7	9.0	7.0	9.6	7.1	10.8	7.3	11.2	7.0
	20.0	6.1	5.3	7.2	6.1	8.4	6.7	9.0	7.0	9.6	7.1	10.8	7.3	11.1	6.9
	21.0	6.1	5.3	7.2	6.1	8.4	6.7	9.0	7.0	9.6	7.1	10.8	7.3	11.0	6.9
	23.0	6.1	5.3	7.2	6.1	8.4	6.7	9.0	7.0	9.6	7.1	10.6	7.2	10.8	6.8
	25.0	6.1	5.3	7.2	6.1	8.4	6.7	9.0	7.0	9.6	7.1	10.5	7.1	10.7	6.7
	27.0	6.1	5.3	7.2	6.1	8.4	6.7	9.0	7.0	9.6	7.1	10.3	7.0	10.5	6.7
	29.0	6.1	5.3	7.2	6.1	8.4	6.7	9.0	7.0	9.6	7.1	10.2	6.9	10.4	6.6
	31.0	6.1	5.3	7.2	6.1	8.4	6.7	9.0	7.0	9.6	7.1	10.0	6.9	10.2	6.6
	33.0	6.1	5.3	7.2	6.1	8.4	6.7	9.0	7.0	9.6	7.1	9.8	6.8	10.1	6.5
	35.0	6.1	5.3	7.2	6.1	8.4	6.7	9.0	7.0	9.5	7.1	9.7	6.8	9.9	6.5
	37.0	6.1	5.3	7.2	6.1	8.4	6.7	9.0	7.0	9.3	7.0	9.5	6.7	9.8	6.4
	39.0	6.1	5.3	7.2	6.1	8.4	6.7	9.0	7.1	9.2	6.9	9.4	6.6	9.6	6.4
100	10.0	7.6	6.3	9.0	7.0	10.5	7.7	11.2	7.9	11.9	8.1	13.4	8.4	14.7	8.6
	12.0	7.6	6.3	9.0	7.0	10.5	7.7	11.2	7.9	11.9	8.1	13.4	8.4	14.5	8.4
	14.0	7.6	6.3	9.0	7.0	10.5	7.7	11.2	7.9	11.9	8.1	13.4	8.4	14.4	8.3
	16.0	7.6	6.3	9.0	7.0	10.5	7.7	11.2	7.9	11.9	8.1	13.4	8.4	14.2	8.2
	18.0	7.6	6.3	9.0	7.0	10.5	7.7	11.2	7.9	11.9	8.1	13.4	8.4	14.0	8.1
	20.0	7.6	6.3	9.0	7.0	10.5	7.7	11.2	7.9	11.9	8.1	13.4	8.4	13.8	8.0
	21.0	7.6	6.3	9.0	7.0	10.5	7.7	11.2	7.9	11.9	8.1	13.4	8.4	13.7	7.9
	23.0	7.6	6.3	9.0	7.0	10.5	7.7	11.2	7.9	11.9	8.1	13.2	8.3	13.5	7.8
	25.0	7.6	6.3	9.0	7.0	10.5	7.7	11.2	7.9	11.9	8.1	13.0	8.2	13.3	7.8
	27.0	7.6	6.3	9.0	7.0	10.5	7.7	11.2	7.9	11.9	8.1	12.8	8.1	13.1	7.7
	29.0	7.6	6.3	9.0	7.0	10.5	7.7	11.2	7.9	11.9	8.1	12.6	8.0	12.9	7.6
	31.0	7.6	6.3	9.0	7.0	10.5	7.7	11.2	7.9	11.9	8.1	12.4	7.9	12.7	7.5
	33.0	7.6	6.3	9.0	7.0	10.5	7.7	11.2	7.9	11.9	8.1	12.2	7.8	12.5	7.4
	35.0	7.6	6.3	9.0	7.0	10.5	7.7	11.2	7.9	11.8	8.0	12.1	7.7	12.3	7.3
	37.0	7.6	6.3	9.0	7.0	10.5	7.7	11.2	7.9	11.6	7.9	11.9	7.6	12.2	7.3
	39.0	7.6	6.3	9.0	7.0	10.5	7.7	11.2	7.9	11.4	7.8	11.7	7.5	12.0	7.2
125	10.0	9.5	7.7	11.3	8.7	13.1	9.6	14.0	9.8	14.9	10.1	16.8	10.5	18.4	10.7
	12.0	9.5	7.7	11.3	8.7	13.1	9.6	14.0	9.8	14.9	10.1	16.8	10.5	18.2	10.5
	14.0	9.5	7.7	11.3	8.7	13.1	9.6	14.0	9.8	14.9	10.1	16.8	10.5	18.0	10.4
	16.0	9.5	7.7	11.3	8.7	13.1	9.6	14.0	9.8	14.9	10.1	16.8	10.5	17.7	10.2
	18.0	9.5	7.7	11.3	8.7	13.1	9.6	14.0	9.8	14.9	10.1	16.8	10.5	17.5	10.1
	20.0	9.5	7.7	11.3	8.7	13.1	9.6	14.0	9.8	14.9	10.1	16.8	10.5	17.2	10.0
	21.0	9.5	7.7	11.3	8.7	13.1	9.6	14.0	9.8	14.9	10.1	16.8	10.5	17.1	9.9
	23.0	9.5	7.7	11.3	8.7	13.1	9.6	14.0	9.8	14.9	10.1	16.5	10.3	16.9	9.8
	25.0	9.5	7.7	11.3	8.7	13.1	9.6	14.0	9.8	14.9	10.1	16.3	10.2	16.6	9.6
	27.0	9.5	7.7	11.3	8.7	13.1	9.6	14.0	9.8	14.9	10.1	16.1	10.0	16.4	9.6
	29.0	9.5	7.7	11.3	8.7	13.1	9.6	14.0	9.8	14.9	10.1	15.8	9.9	16.2	9.4
	31.0	9.5	7.7	11.3	8.7	13.1	9.6	14.0	9.8	14.9	10.1	15.6	9.8	15.9	9.3
	33.0	9.5	7.7	11.3	8.7	13.1	9.6	14.0	9.8	14.9	10.1	15.3	9.7	15.7	9.2
	35.0	9.5	7.7	11.3	8.7	13.1	9.6	14.0	9.8	14.8	10.0	15.1	9.6	15.4	9.1
	37.0	9.5	7.7	11.3	8.7	13.1	9.6	14.0	9.8	14.5	9.9	14.9	9.5	15.2	9.1
	39.0	9.5	7.7	11.3	8.7	13.1	9.6	14.0	9.9	14.3	9.8	14.6	9.4	15.0	9.0

TC Total capacity ; kW
SC Sensible capacity ; kW

Refer to Outdoor Unit Capacity Tables : on page 411~, 470~, for the actual performance data of each indoor and outdoor unit combination.

8. Fan Performance and Discharge Pattern in case of using Branch Duct

Single Branch — 3 Way Discharge

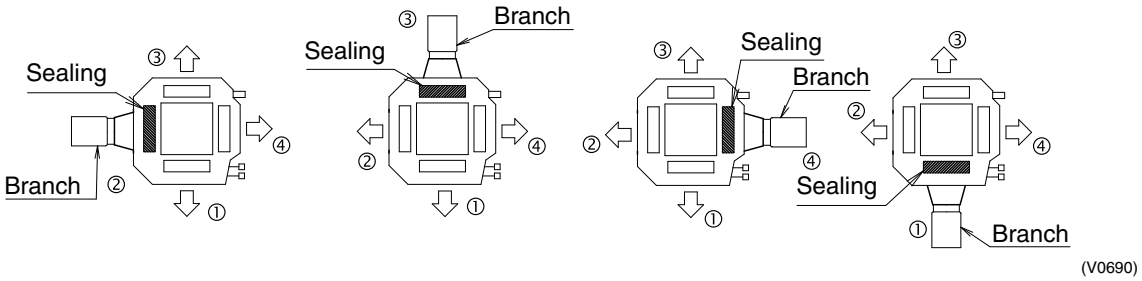

25~80

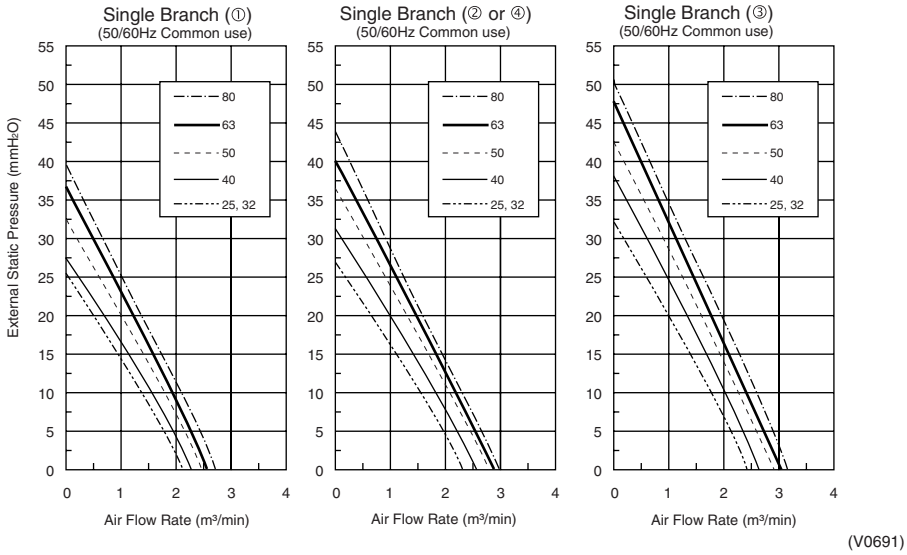

100 · 125

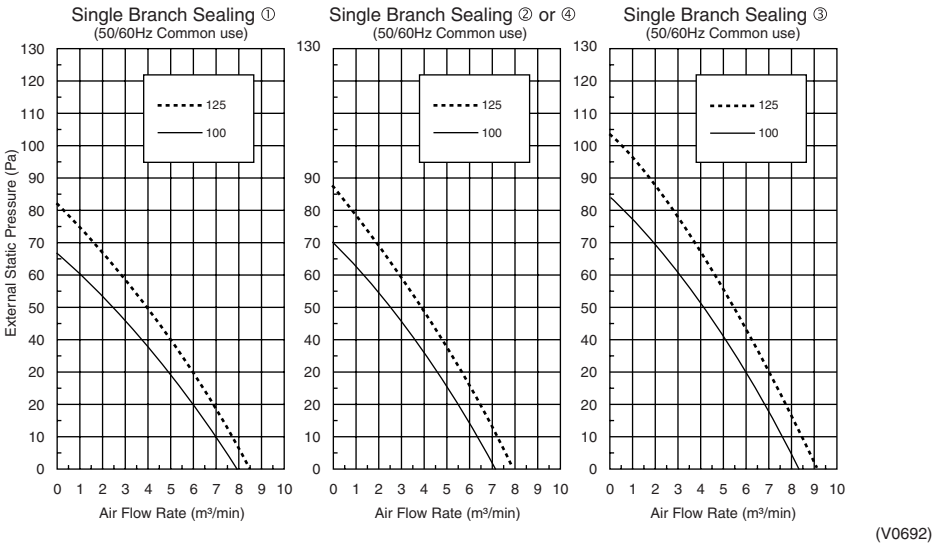

Single Branch — 2 Way Discharge

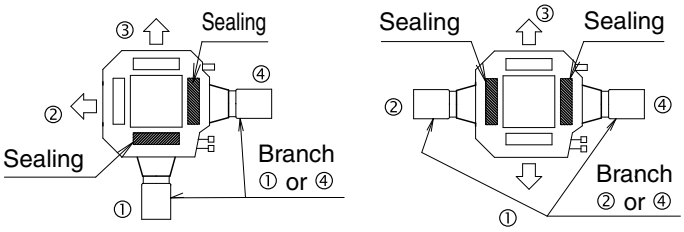

(V0693)

25~80

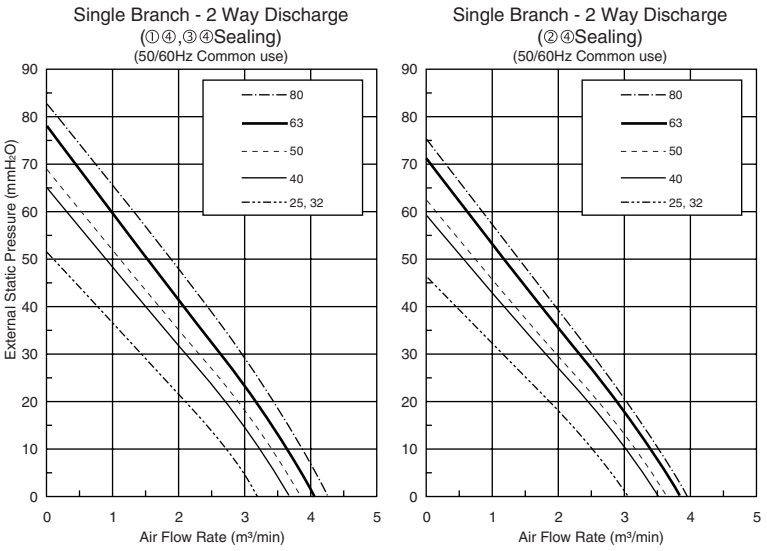

(V0694)

100 · 125

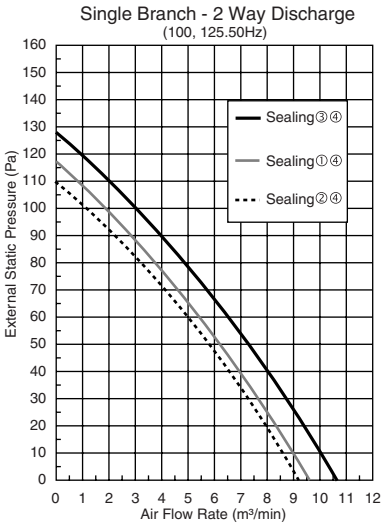

(V0695)

2 Branches — 2 Way Discharge

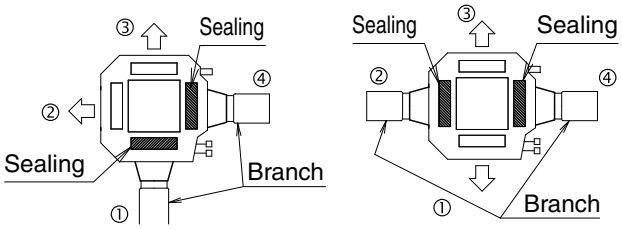

(V0696)

25~80

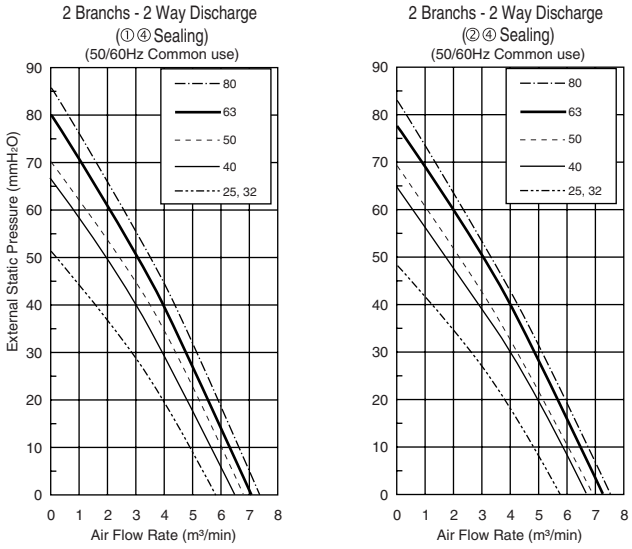

(V0697)

100 · 125

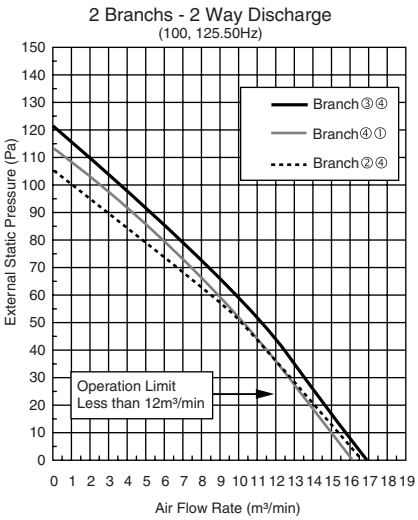

(V0698)

9. Sound Levels

Overall

■ **Ceiling Mounted Cassette Type (Multi-Flow Type)**
- Super Cassette -

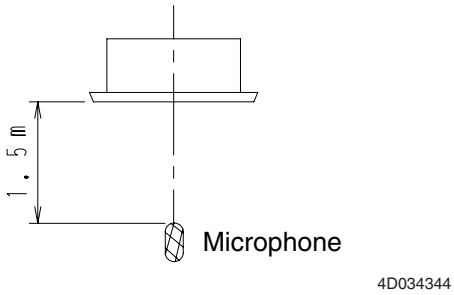

Note:

1. The operating conditions are assumed to be standard (JIS conditions).
2. These operating values were obtained in a dead room (conversion values).
   Sound level will vary depending on a range of factors such as the construction (acoustic absorption coefficient) of the particular room in which the equipments installed.

dBA

Model	220~240V, 50Hz	
	H	L
FXFQ25M	30	27
FXFQ32M	30	27
FXFQ40M	31	27
FXFQ50M	32	27
FXFQ63M (C/H)	33/34	28
FXFQ80M	36	31
FXFQ100M	39	33
FXFQ125M (C/H)	42/43	36

Octave Band Level

220~240V 50Hz

FXFQ25 · 32MVE

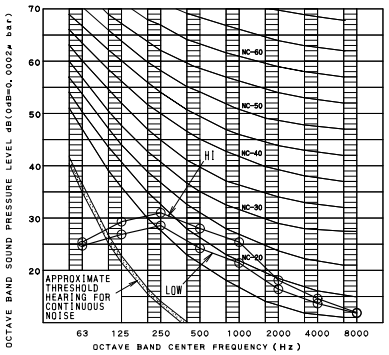

4D034344

FXFQ40MVE

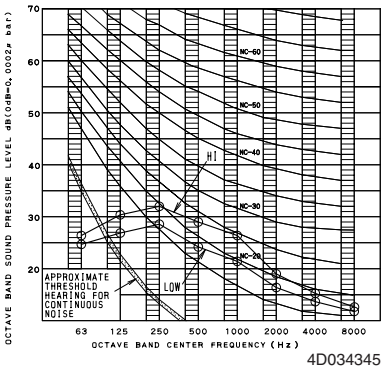

4D034345

FXFQ50MVE

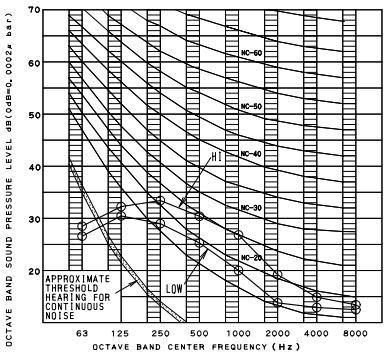

4D034346

FXFQ63MVE

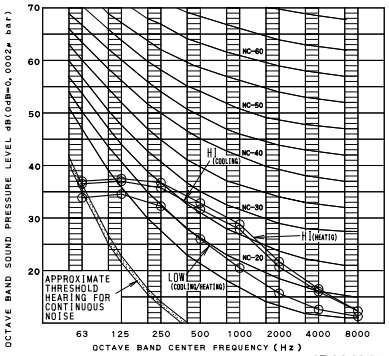

4D034347

FXFQ80MVE

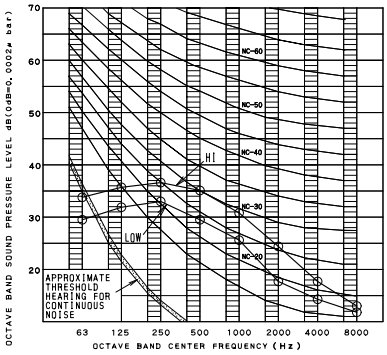

4D034348

FXFQ100MVE

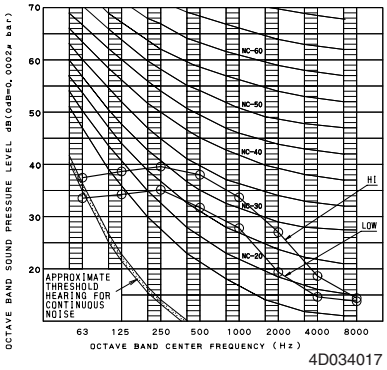

4D034017

FXFQ125MVE

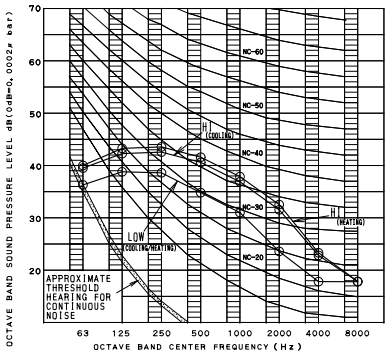

4D034349

10. Installation

Center of Gravity

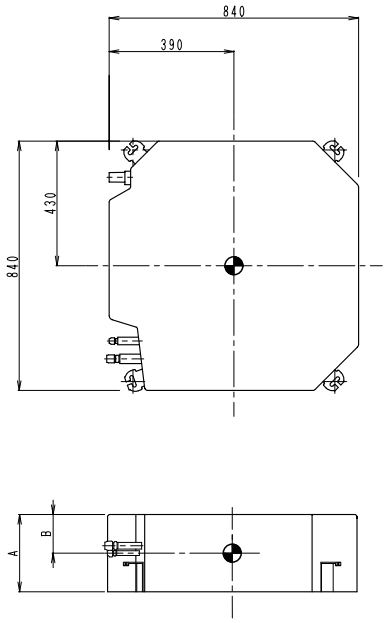

Unit (mm)

MODEL NAME	A	B
FXFQ25~80MVE	246	90
FXFQ100~125MVE	288	120

C : 4D033891B

Service Space for Indoor Units

Unit (mm)

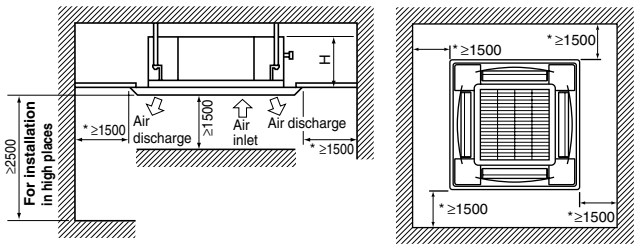

Fig. 1 Fig. 2

NOTE

· Leave 200 mm or more space where marked with the *, on sides where the air outlet is closed.

Model	H
FXFQ25 · 32 · 40 · 50 · 63 · 80MVE	256
FXFQ100 · 125MVE	298

3PA60996-14Y

Note:

Above figure means minimum value. Please these value at least.

Bolt Pitch

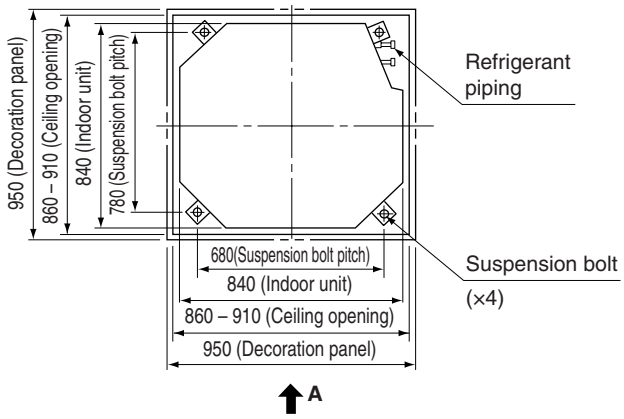

Fig. 3

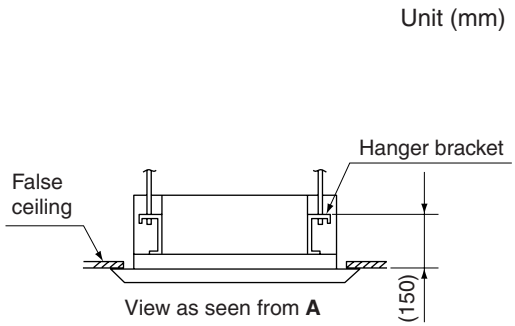

Fig. 4

3PA60996-14Y

Drain Pump Kit

Indoor unit	Drain pump kit
FXFQ-M	Standard (Equipped with indoor unit)

Drain Piping Work

(1) Carry out the drain piping

- Lay pipes so as to ensure that drainage can occur with no problems.
- Employ a pipe with either the same diameter or with the diameter larger (excluding the raising section) than that of the connecting pipe (PVC pipe, nominal diameter 25 mm, outside diameter 32 mm).
- Keep the drain pipe short and sloping downwards at a gradient of at least 1 / 100 to prevent air pockets from forming.
- If the drain hose cannot be sufficiently set on a slope, execute the drain raising piping.
- To keep the drain hose from sagging, space hanging wires every 1 to 1.5 m.

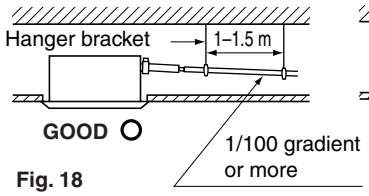

Fig. 18

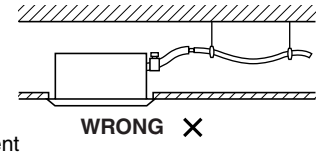

Fig. 19

- Use the drain hose (1) (accessory) and metal clamp (2).
- Insert the drain hose into the drain socket up to the base, and tighten the metal clamp securely within the portion of a white tape of the hose-inserted tip. Tighten the metal clamp until the screw head is less than 4 mm from the hose.
- Wrap the sealing pad (10) (accessory) over the metal clamp and drain hose to insulate.
- Make sure that heat insulation work is executed on the following 2 spots to prevent any possible water leakage due to dew condensation.
  - Indoor drain pipe
  - Drain socket

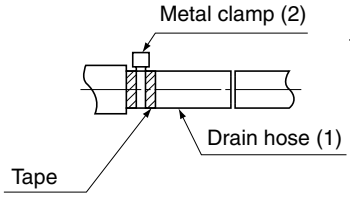

Fig. 20

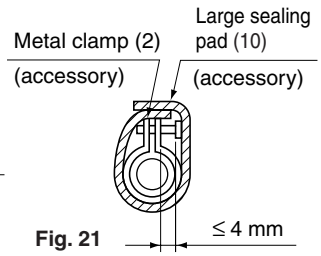

Fig. 21

3PA60996-14Y

<PRECAUTIONS FOR DRAIN RAISING PIPING>

- Install the drain raising pipes at a height of less than 550 mm.
- Install the drain raising pipes at a right angle to the indoor unit and no more than 300 mm from the unit.

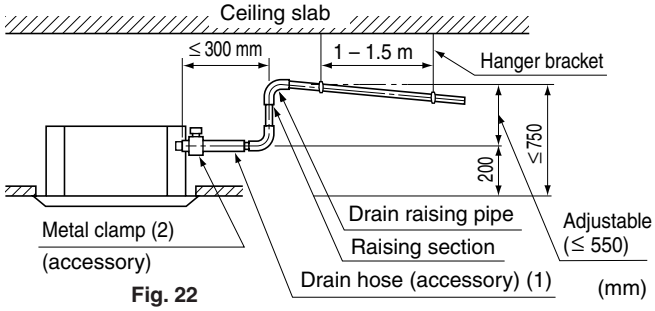

Fig. 22

NOTE

- To ensure no excessive pressure is applied to the included drain hose (1), do not bend or twist when installing. (This may cause leakage.)
- If converging multiple drain pipes, install according to the procedure shown below.

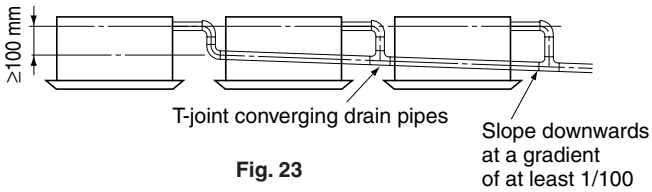

Fig. 23

Select converging drain pipes whose gauge is suitable for the operating capacity of the unit.

(2) After piping work is finished, check if drainage flows smoothly.

- Add approximately 2 liter of water slowly from the air outlet and check drainage flow.

WHEN ELECTRIC WIRING WORK IS FINISHED

- Check drainage flow during COOL running, explained under “TEST OPERATION”.

WHEN ELECTRIC WIRING WORK IS NOT FINISHED

- Remove the terminal box lid connect a power supply and remote controller to the terminals.
  (Refer to the “HOW TO CONNECT WIRINGS”)
  Be sure to attach the terminal box lid before turning on the power.
  Next, press the inspection / test operation button “ TEST ” on the remote controller. The unit will engage the test operation mode. Press the operation mode selector button “ ” until selecting FAN OPERATION “ ”. Then, press the ON / OFF button “ ⏻ ”. The indoor unit fan and drain pump will start up. Check that the water has brained from the unit. Press “ TEST ” to go back to the first mode.
- **Note that the fan also starts rotating.**
- Attach the terminal box lid as before.

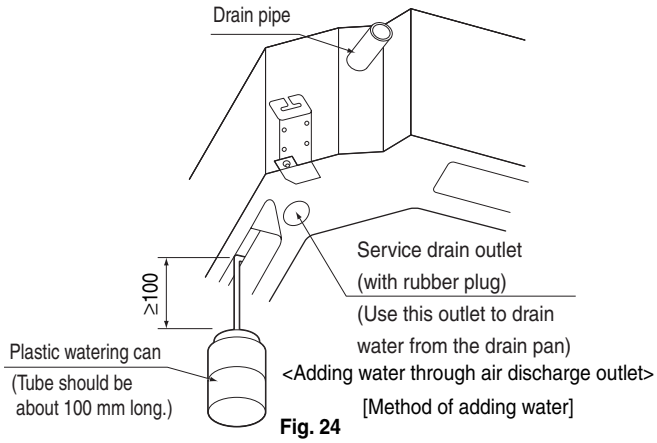

Fig. 24

3PA60996-14Y

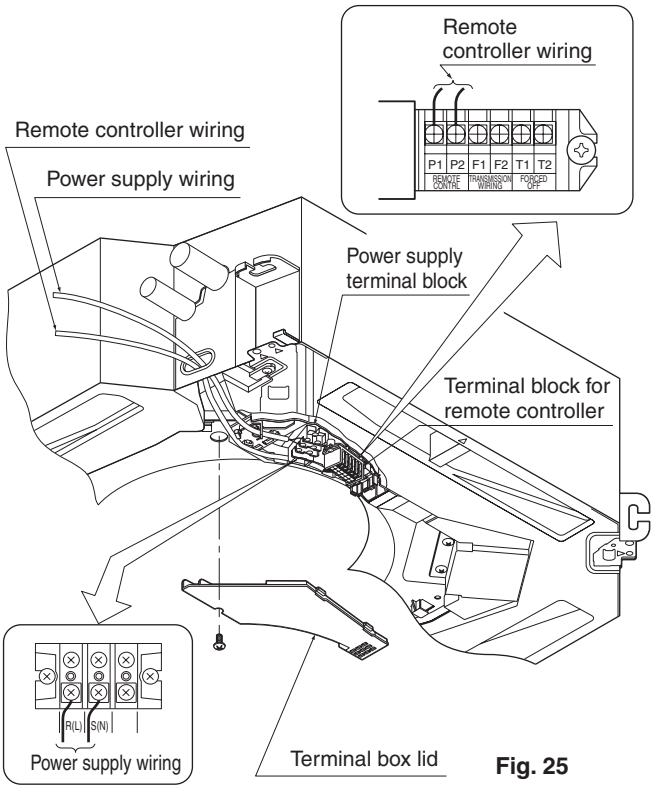

Fig. 25

CAUTION

- Drain piping connections
  Do not connect the drain piping directly to sewage pipes that smell of ammonia. The ammonia in the sewage might enter the indoor unit through the drain pipes and corrode the heat exchanger.
- Keep in mind that it will become the cause of getting drain pipe blocked it water collects on drain pipe.

3PA60996-14Y

11. Accessories

Standard Accessories

FXFQ25~125M

Name	(1) Drain hose	(2) Metal clamp	(3) Washer for hanging bracket	(4) Clamp	(5) Paper pattern for installation	(6) Screws (M5)
Quantity	1 pc.	1 pc.	8 pcs.	8 pcs.	1 pc.	4 pcs.
Shape					Also used as packing material	For paper pattern for installation

Name	(7) Washer fixing plate	Insulation for fitting	Sealing pad		
Quantity	4 pcs.	1 each	1 each	1 pc.	
Shape		(8) for gas pipe (9) for liquid pipe	(10) Large (11) Medium	(12) Small	(Other) • Installation manual • Operation manual

3PA60996-14Y

Optional Accessories (For Unit)

Item \ Model			FXFQ25MVE	FXFQ32MVE	FXFQ40MVE	FXFQ50MVE	FXFQ63MVE	FXFQ80MVE	FXFQ100MVE	FXFQ125MVE
Decoration panel			BYCP125D-W1							
Sealing member of air discharge outlet			KDBH55D160W							
Panel spacer			KDBP55H160WA							
Filter related	High efficiency filter unit	65%	KAFP556D80						KAFP556D160	
		90%	KAFP557D80						KAFP557D160	
	Replacement high efficiency filter	65%	KAFP552H80						KAFP552H160	
		90%	KAFP553H80						KAFP553H160	
	Filter chamber		KDDFP55D160							
	Long life replacement filter	Non-woven type	KAFJ551C160							
	Ultra long-life filter		KAFP55D160							
	Replacement ultra long-life filter		KAFJ55K160H							
Fresh air intake kit	Chamber type	Without T shape pipe and fan	KDDP55D160							
		With T shape pipe without fan	KDDP55D160K							
	Direct installation type		KDDJ55X160							
Branch duct chamber			KDP55D80						KDP55D160	
Chamber connection kit			KKSJ55K160							
Insulation kit for high humidity			KDT-55D80						KDT-55D160	

3D034258B

Optional Accessories (For Controls) : Refer to P.561

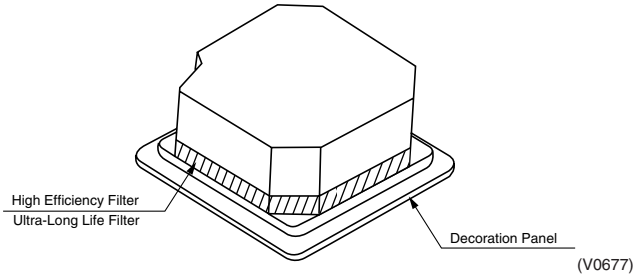

BYCP125D-W1 – Decoration Panel

1. BEFORE INSTALLATION

1. PRECAUTIONS

- Refer also to the installation manual attached to the indoor unit.

2. ACCESSORIES

- Installation manual.

3. NOTE TO INSTALLER

- Be sure to instruct the customer how to properly operate the system showing him/her the attached operation manual.

2. PREPARATION OF DECORATION PANEL

<<For this unit, you are able to select air flow directions. To discharge air in 2 or 3 directions, it is necessary to purchase optional blocking pad kit.>>

HANDLING OF DECORATION PANELS

- Never place the panel facing down nor lean it against a wall nor leave it on a projecting object.
- Never touch or put pressure on the swing flap.
  (The swing flap may malfunction.)

(1) Remove the swing flap motor lead wire on the back of the decoration panel form the hook.
Push the wires outward to the frame surface and remove the wires from the hook in the middle.
(Refer to Fig. 1)

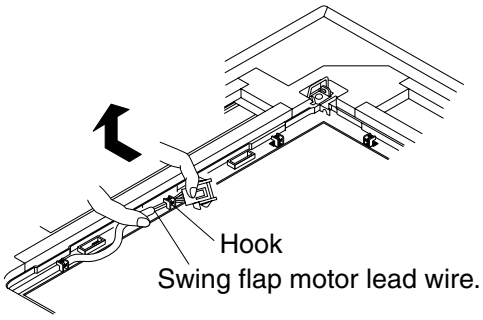

Fig. 1

(2) Remove the suction grille from the decoration panel.

1 Push the suction grille lever inward and lift up the lever side. **(Refer to Fig. 2)**

2 Detach the suction grille from the decoration panel by lifting the grille up approximately 45 degrees. **(Refer to Fig. 3)**

(3) Remove the service cover on the corner.

- Slide the service cover outward to remove. **(Refer to Fig. 4)**

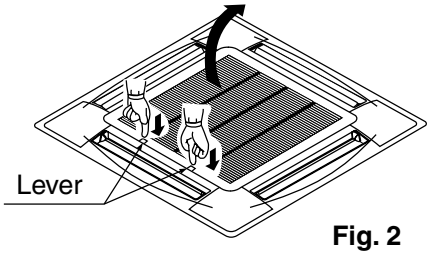

Fig. 2

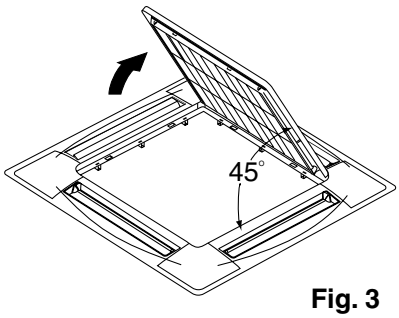

Fig. 3

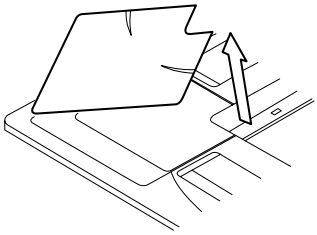

Fig. 4

3PA64319-11M

3. INSTALLATION OF THE DECORATION PANEL TO THE INDOOR UNIT BODY

<<Refer to the installation manual attached to the indoor unit for the installation of the indoor unit.>>

(1) Match the “PIPING SIDE” and “DRAIN SIDE” displays on the decoration panel with the position of the piping section and drain section on the indoor unit.

(2) Install the decoration panel.

1 Temporarily install the decoration panel to the indoor unit by hanging the latch on the opposite side of the swing flap motor of the decoration panel to the hook of the indoor unit body. (2 positions)

2 Temporarily hang the remaining 2 latches to the hooks on the sides of the indoor unit.
(Be careful not to let the swing motor lead wire get caught in the sealing material.)

3 Screw all 4 hexagon head screws located right beneath the latches in approximately 5 mm.
(Panel will rise.)

4 Adjust the decoration panel by turning it to the arrowed direction in Fig. 5 so that the ceiling opening is completely covered.

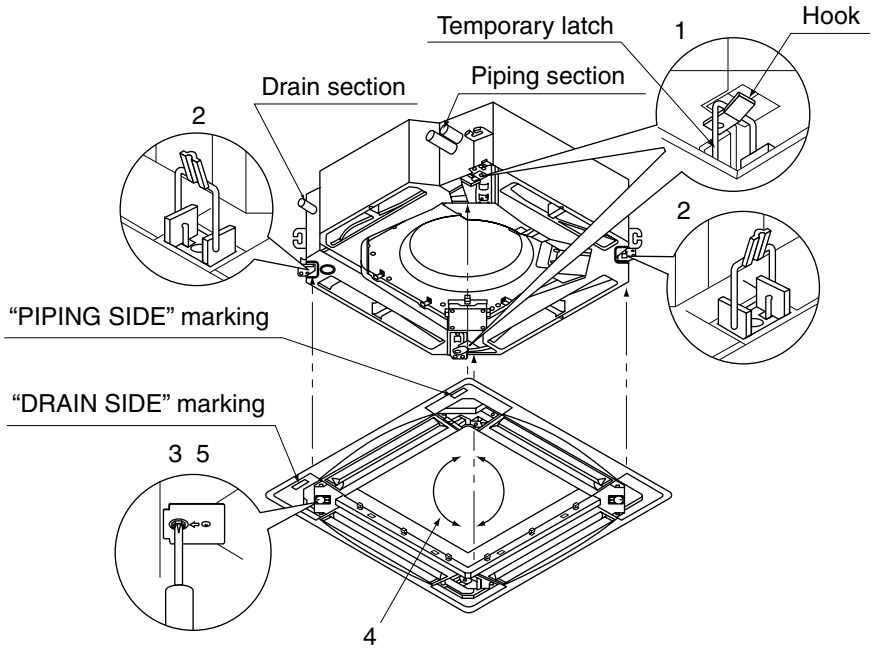

Fig. 5

3PA64319-11M

5 Tighten the screws until the thickness of the sealing material between the decoration panel and the indoor unit body reduces to 5-8 mm.

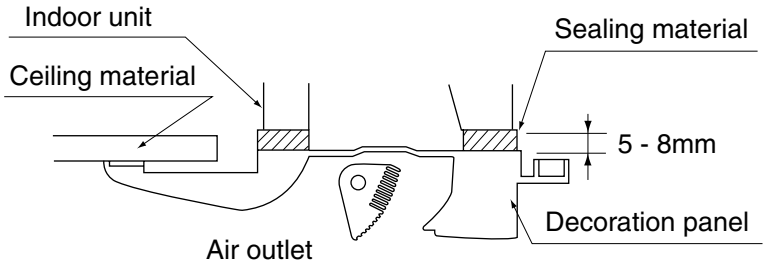

[PRECAUTIONS]

- Inproper screwing of the screws may cause the troubles shown in Fig. 6 Screw properly.

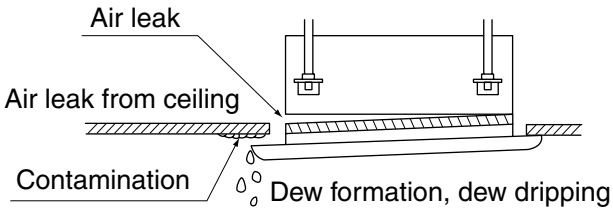

Fig. 6

- If gap is still left between the ceiling and the decoration panel after screwing the screws, readjust the indoor unit body height. **(Refer to Fig. 7)**

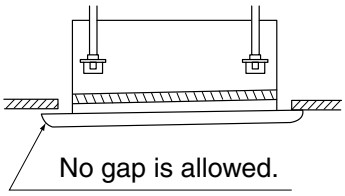

Fig. 7

Adjustment of the indoor unit body height from the holes in the corner of the decoration panel is possible if the indoor unit is kept leveled and the drain piping, etc. is unaffected.

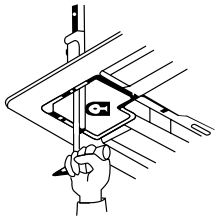

3PA64319-11M

(3) Wiring of the decoration panel **(Refer to Fig. 8)**

6 Remove the terminal box lid.

7 Connect the connectors for swing flap motor lead wire installed on the decoration panel.

8 Replace the terminal box lid reversing the procedure to remove it.

Make sure that the swing flap motor lead wire is not caught between the indoor unit and the decoration panel.

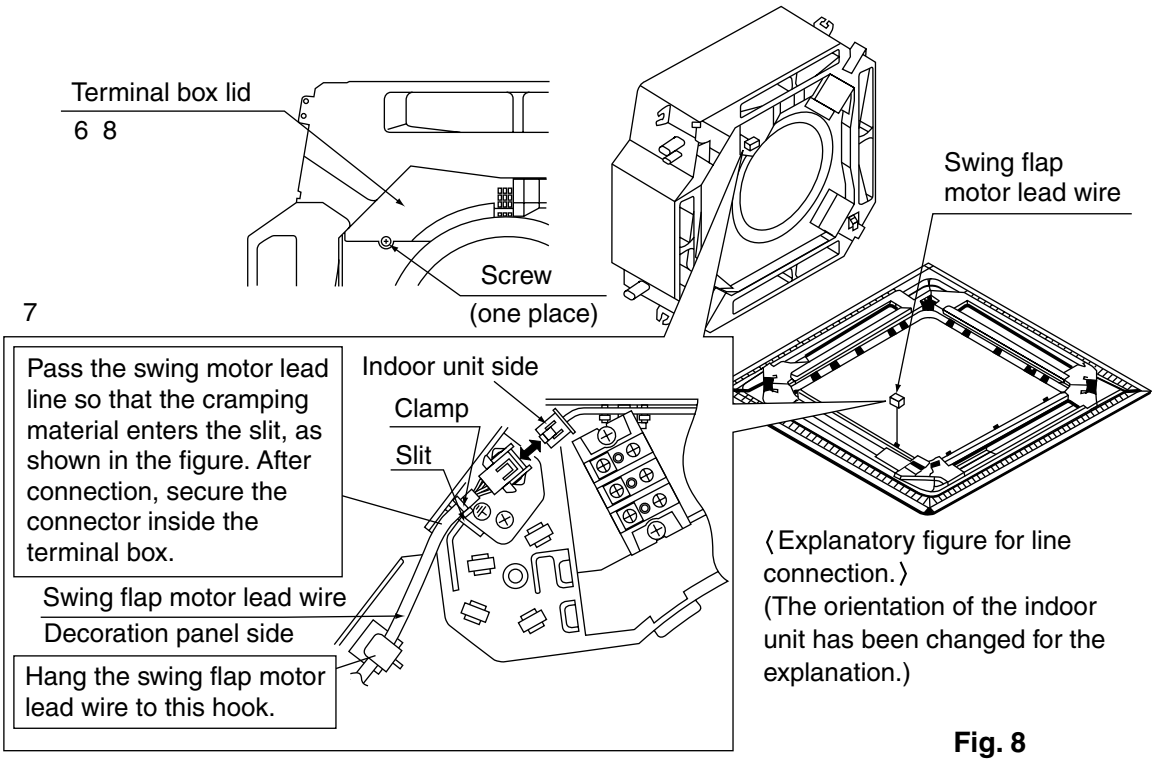

Fig. 8

4. INSTALLATION OF SUCTION GRILLE AND SERVICE COVER

(1) Install the suction grille.
Install by reversing the procedure shown in “PREPARATION OF DECORATION PANEL”.
It is possible to install the suction grille in 4 directions by turning the suction grille.
Change the direction when adjusting the direction of the suction grille of multiple units or in meeting customers’ demands.

NOTE
Be careful not to get swing flap motor lead wire get caught when installing the suction grille.

(2) Install the service cover on the corner.

1 Attach the string of the service cover to the pin of the decoration panel. **(Refer to Fig. 9)**

2 Install the service cover over the decoration panel. **(Refer to Fig. 10)**

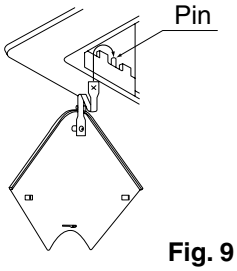

Fig. 9

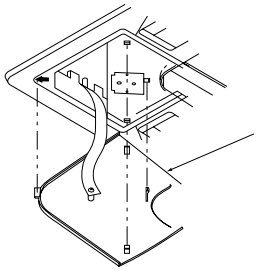

Fig. 10

3PA64319-11M

KDBH55D160W – Sealing Member of Air Discharge Outlet

Caution

- Refer to the installation manual for both indoor unit and the decoration panel.
- When you install other optional kit , it may not be possible to select the 3-way or 2-way air discharge. (followed table)
  For details , refer to the manual for the optional kit or the catalogue.

Optional kit	4-way air discharge	3-way air discharge	2-way air discharge
Branch duct chamber	○	○	○
High efficiency filter chamber	○	× Not possible to install	× Not possible to install

Contents of Kit

Prior to installation make sure you have the complete of parts.

Name	Sealing Material	Tape for fixing the Sealing Material	Insulation for Side Plate	Moisture Absorber for Bell-Mouth	Moisture Absorber for Swing flap	Spacer	Spacer installation screw
Quantity	2 pieces	2 pieces	2 pieces	1 pieces	3 pieces	1 pieces	1 pieces
Shape・marking	①	②	③ 100mm×1480mm	④ 55mm×1055mm	⑤	⑥	⑦ (M3x10)

❶ The direction of air discharge and the positioning of sealing material

(1) Selection of the air outlet

- Select the direction of air discharge from the following table according to the location of the indoor unit.
  Refer to ❷ **Setting of indoor unit** Setting of indoor unit for setting position number.
  Refer to the installation manual attached to the indoor unit for selection of installation location.

Caution Never select the direction of air discharge other than the following pattern.
(You may have a condensation problem.)

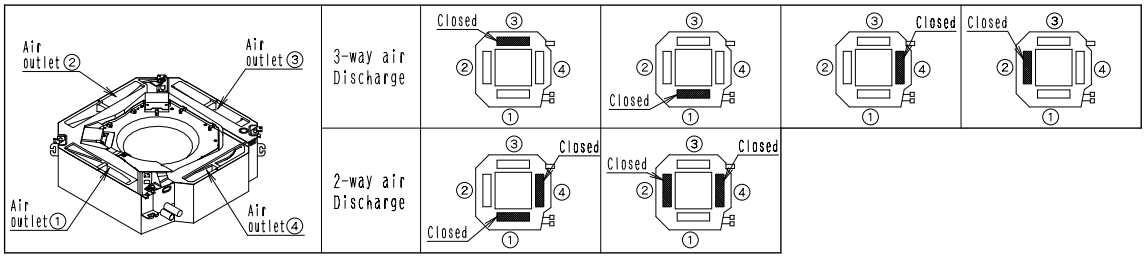

(2) Prepare the sealing material and the tape for fixing the sealing material according to the air outlet No. to be closed.

- Cut off the sealing material and the tape along the perforated lines (marked ———).
- Adhere the sealing material to tape. (Make sure that the sealing material is placed at the center of the tape.)

Example) For closing the air outlet ①
<How to prepare the sealing material>

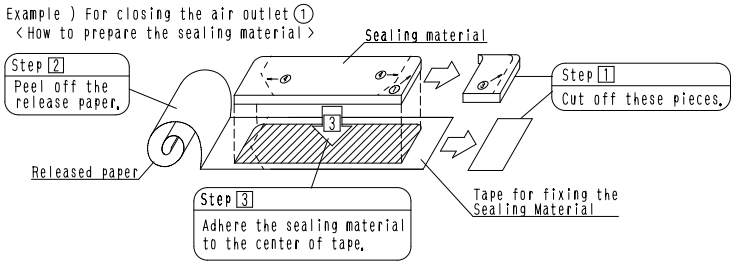

※When closing the air outlet②, it is not required to work on the sealing material.

(3) Adhere the sealing material prepared according to the procedure (2) to the indoor unit air outlet.

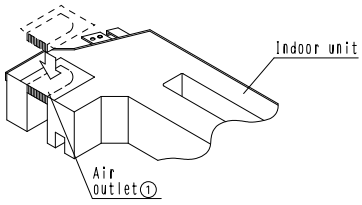

<Installation for air outlet>

Caution

The sealing material has directional characteristics.
Make sure to adhere the sealing material fixing tape in the direction which the parts from ① to ④ can be seen as shown above.

1P088448A

3

❷ Setting for indoor unit

It is required to make a field setting from the remote controller according to how the indoor units are installed. The direction of air discharge must also be set by the remote controller.

- The 3 different kinds of setting such as "Mode number", "The setting switch number" and "The setting position number" must be made by the remote controller.
- Refer to the item of "Field setting" in the operation manual of the remote controller for the setting procedure.

(1) Setting according to number of use of the air discharge.
Check the setting position number corresponding to the direction of air discharge in a right table.

(Content of setting)

(Number of use of air outlets)	Mode number	The setting switch number	The setting position number
3-way air discharge	13(23)	1	02
2-way air discharge			03

Note) Refer to the table for height of the ceiling for each direction of air outlet. (The setting of the ceiling height is also required.)

(2) Setting according to height of ceiling.
As for the ceiling height, see the left table below which shows the standard of ceiling height and number of air outlets to be used.
Then, taking this standard into account, make a field setting of ceiling height from the remote controller according to the right table below.

(Standards of ceiling height and number of air outlets)

Indoor unit (FHYCP, FXF)		Number of use of air outlets					
		25~80 type			100~140 type		
		4-way air discharge	3-way air discharge	2-way air discharge	4-way air discharge	3-way air discharge	2-way air discharge
Ceiling height (m)	Standard	~2.7	~3.0	~3.5	~3.2	~3.6	~4.2
	Semi-high	2.7~3.0	3.0~3.3	3.5~3.8	3.2~3.6	3.6~4.0	~4.2
	High	3.0~3.5	3.3~3.5	——	3.6~4.2	4.0~4.2	——

(Content of setting)

		Mode number	The setting switch number	The setting position number
Ceiling height (m)	Standard	13(23)	1	01
	Semi-high			02
	High			03

(Ceiling height is reference value)

❸ Installation of the insulation

Please turn off the power supply for safety absolutely, before you do installation of the decoration panel and affixation of insulation and connected work of swing conector.

(1) Adhere the insulations for side plate ③ in position, referring (Fig. 1).
(2) Adhere the moisture absorber for bell-mouth ④ on the inner surface of the bell-mouth. See (Fig. 1) (Fig. 2).
(3) Adhere the moisture absorber for swing flap aligning with the upper edge of the swing flap on the air outlet. See (Fig. 3).

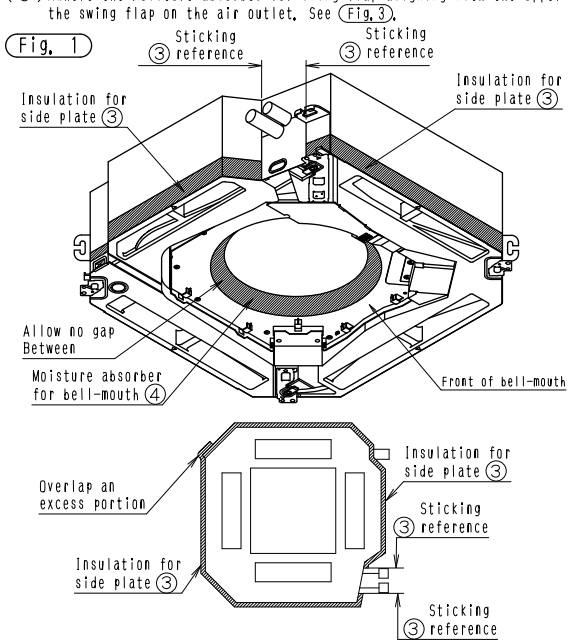

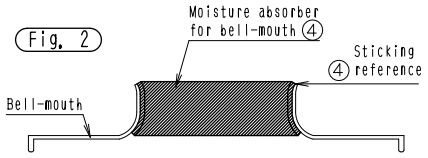

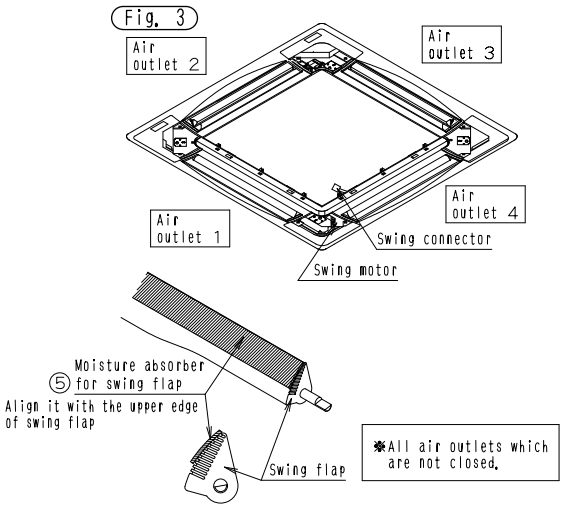

❹ Installation of the spacer

Please install spacer ⑥ on the swing motor with the spacer installation screw ⑦.

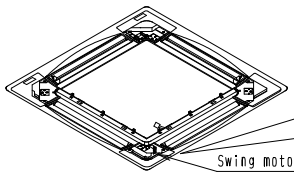

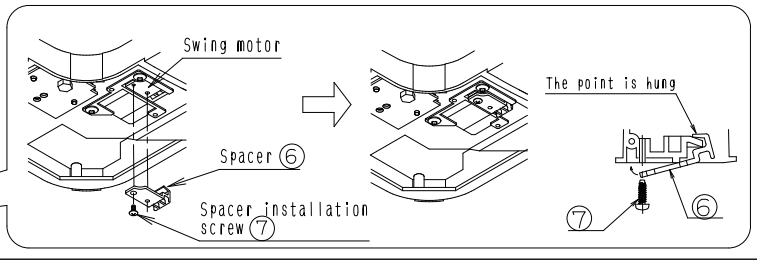

1P088448A

KDBP55H160WA – Panel Spacer

Combination table

Panel spacer	KDBP55H160FA	KDBP55H160WA KDB55K160WA
Decoration panel	BYCP125K-W1	BYCP125D-W1 BYC125K-W1 BYC125KJW1

Caution

- When the Panel Spacer is installed, it is not possible to have 2-way air outlet.
- Refer to the installation manual for both indoor unit and the Panel spacer for its installation.

Contents of kit

Check if following parts are included with your kit.

Name	Panel spacer frame	Resin corner part	Fixing metal	Screw
Quantity	4 PCS.	4 PCS.	4 PCS.	28 PCS.
Shape・number	① 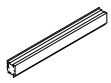	② 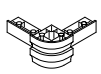	③ 	④ M4×10 Tapping screw (Class 2)

Name	Sealing material		Caution label	Others
Quantity	2 PCS.	2 PCS.	1 PC.	• This Installation Manual
Shape・number	⑤ 	⑥ 	⑦ 	

❶ Preparation of the Decoration panel

- Handle the decoration panel with care.

Never place the panel face down, or lean the panel against wall or place on the projective object.
(It causes the dent or damage of the surface of the panel or damage of swing motor.)

(1) Remove the suction grill from the decoration panel.
(Refer to the installtion manual of the decoration panel how to remove.)

(2) Place the panel face down on the corrugated board or the vinyl sheet to protect the surface of the panel.

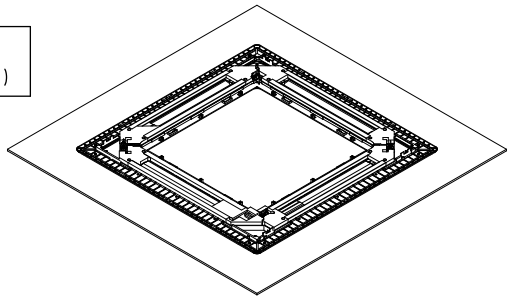

❷ Installation of the indoor unit

Adjust the height of the indoor unit.

Be sure the piping will not contact with the ceiling joist etc. after adjusting the height.

Standard installation

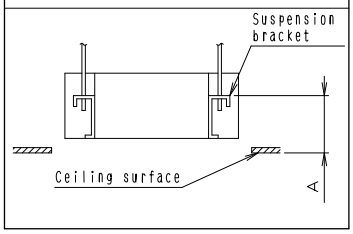

When the Panel spacer is installed

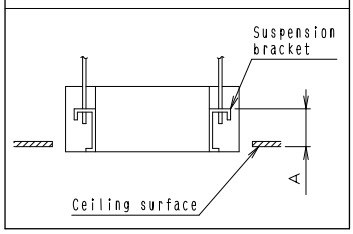

Decoration panel	A(mm)
BYCP125D-W1 BYC125K-W1 BYC125KJW1	145~150
BYCP125K-W1	125~130

Decoration panel	A(mm)
BYCP125D-W1 BYC125K-W1 BYC125KJW1	105~110
BYCP125K-W1	85~90

1P136564E

3

❸ Assembly of panel spacer

(1) Assemble the panel spacer frame ① and the plastic corner joint ② temporarily.

(2) Fix with the screws ④ from the top. (4 screws in each corner)

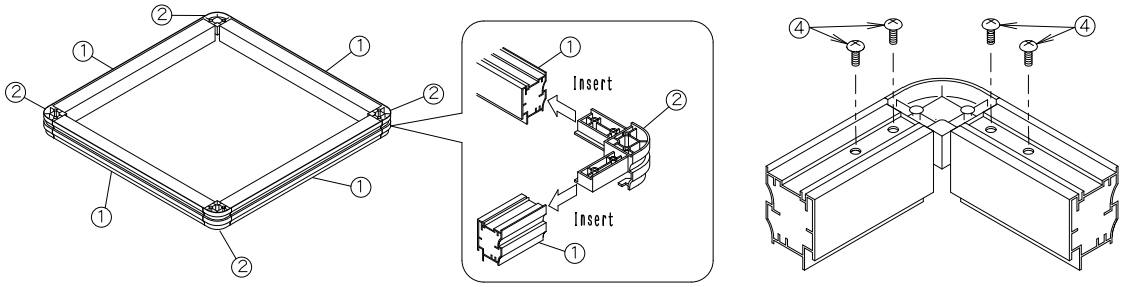

❹ Fixing to the Decoration panel

(1) Set the fixing metal ③ on each corner with screws ④.
(Screw positions change with decoration panels, as shown in the following figure.)

(2) Place the panel spacer assembled in item ③ Assembly of panel spacer of the above on the outer frame of the Decoration panel.

(3) Fix the panel spacer to the fixing metal ③ with screws ④ (4 portions).

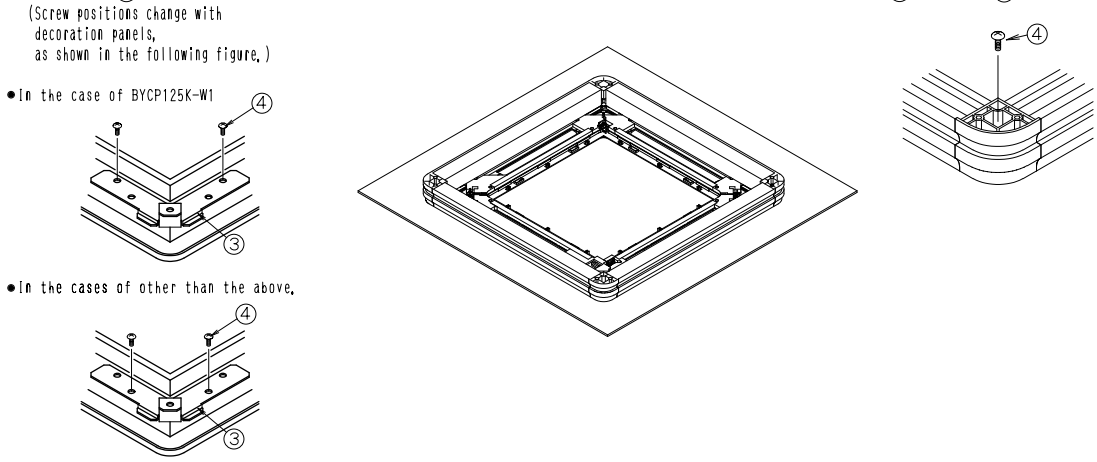

❺ Adhesion of the sealing material

Adhere the sealing material ⑤ ⑥ on the upper face of the panel spacer in the order of ⑤ and ⑥.

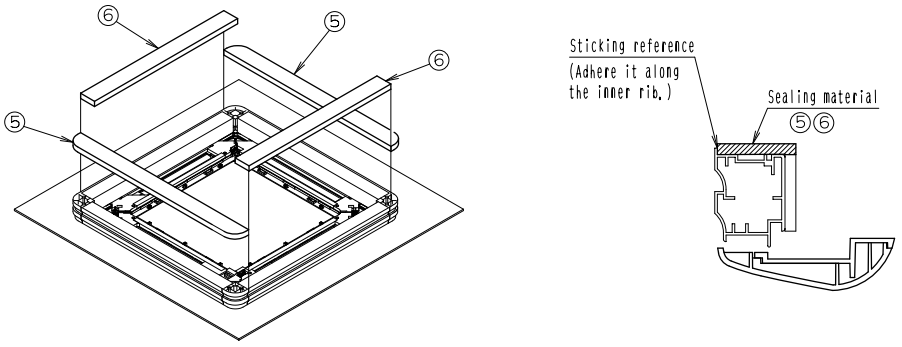

❻ Installation of the Decoration panel

(1) install the decoration panel to the indoor unit according to the installation manual of decoration panel.

> The panel spacer is not firmly fixed to the decoration panel, so that never hold the panel spacer directly or lean the decoration panel extremely.

(2) After installation of the Decoration panel, adhere the caution sticker ⑦ next to the name plate of the indoor unit as shown on the right.

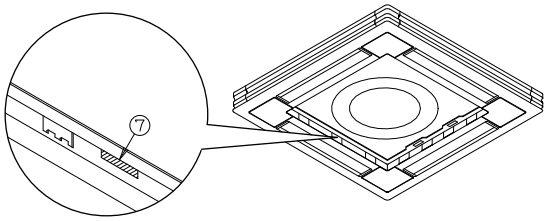

1P136564E

KDDP55D160(K) – Fresh Air Intake Kit

⚠Caution Before starting the installation work, carefully read the following, safety precautions and observe them to ensure safety during work.

- Make sure to use the attached or specified components to install the products. Otherwise, it may cause air leak or the product may fall.
- After installation, check whether there is no abnormality during the trial operation.

REMARKS

- This kit can be installed to the Ceiling Mounted Cassette Type Air Conditioner<Multi-flow type>.
- Before installation, make sure the indoor unit number.
- Refer to the installation manuals for the indoor unit and the decoration panel.

Combination table

Kit name	Indoor unit model that party crowded is possible	
KDDP55D160 KDD55DA160 KDDP55D160K KDD55DA160K	SPLIT	FHYCP50·60·71·100·125DVE FHYCP71·100·125·140DVL
	VRV	FXF25·32·40·50·63·80·100·125LVE FXF25·32·40·50·63·80·100·125LVEC FXFQ25·32·40·50·63·80·100·125MVE

Components Check if the following parts are included with your kit.
Shaded part is separately packed.

Name		①Suction Chamber	②Connecting Chamber (Right)	③Connecting Chamber (Left)	④Screw	⑤Closing Material	⑥T Joint	⑦Flexible Duct	⑧Clamp	⑨Installation Manual
Shape					M4×12					
Q'ty	KDDP55D160 KDD55DA160	1 PC.	1 PC.	1 PC.	4PCS.	1 PC.	—	—	—	1 PC.
	KDDP55D160K KDD55DA160K	1 PC.	1 PC.	1 PC.	4PCS.	—	1 PC.	2PCS.	4PCS.	1 PC.

❶ Selection of Location and Access Door

1. Referto the following table.

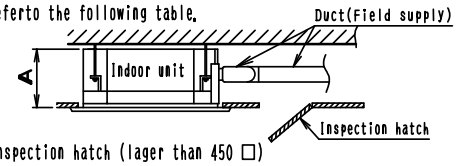

2. Inspection hatch (lager than 450 □)

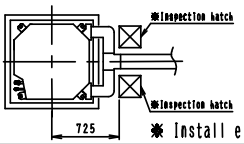

Indoor unit	A
25~80	306
100~140	348

※ Install either one of hatches

In case of KDDP55D160

- When the intake from both sides can not be obtained due to an obstacle, one side intake is acceptable.
  In this case, make sure to close the opening with the closing material⑤.
- In case of one side intake, the noise will be larger than intake from both sides.

(Example of one side intake)

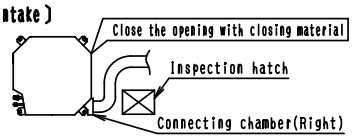

※When installing the wireless receiver kit on the indoor unit, the duct must be led from right side as shwn. In this case, use KDDP55D160 or KDD55DA160.

❷ Installation of the Suction chamber

1. Remove the decoration panel. (This is not required for the new installtion)
   - Remove the decoration panel in the reverse step when the panel is installed.
     (Refer to the installation manual of the decoration panel for the detais.)
2. Temporarily install the suction chamber to the indoor unit by hanging the lutch on the opposite side of the suction chamber to the hook of the indoor unit body. (2 portions)
   Temporarily hang the remaining 2 hooks of the suction chamber to the hooks on the sides of the indoor unit. (fig.1) ~ (fig.3)
   (When the indoor unit is already installed, hang the hook to the suspennsion bracket temporarily and fix the hook.)
   ※Installation set outline of the indoor unit (fig.2)
3. Tighten 2hexahead screws located beneath the lutches until the thickness of the sealing material of chamber reduces to 5~8mm. (fig.4) (fig.5)

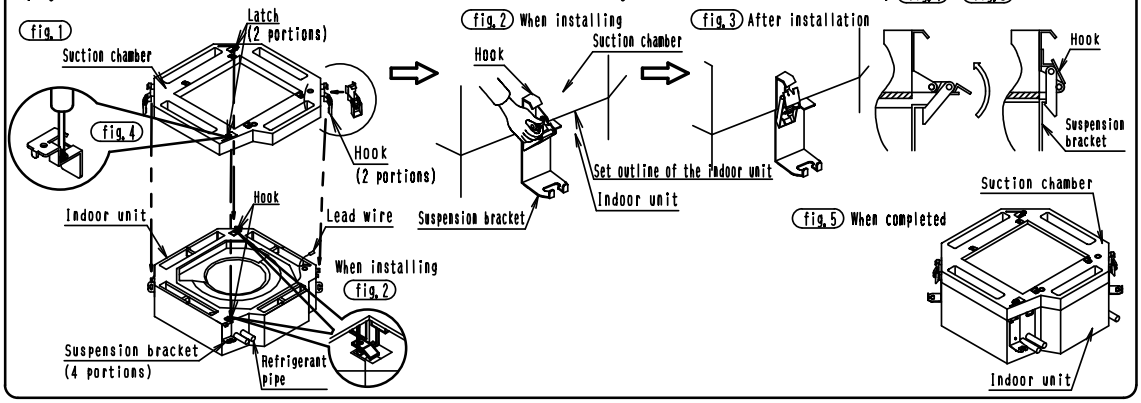

3K011144A

3

❸ Installation of the Indoor Unit and the Suction Chamber

- Install the indoor unit and the suction chamber.
  Refer to the installation manual of the indoor unit.
  (For the height of the unit, refer to the drawing on the right.)
- Be complete installated refrigerant piping, and drain piping.
- Attach the paper pattern for installation to the indoor unit with screws to protect the indoor unit from dirt. [See below]
  (When the indoor unit is newly installed)
  (See below)
- In case of attaching the chamber after installed indoor unit.
  For the height of the unit, change the height shown on the right drawing.

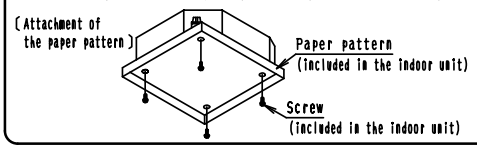

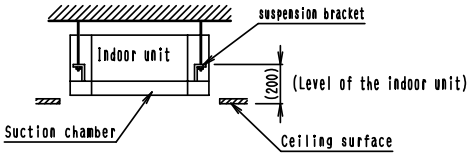

❹ Installation of Connecting duct

1. Install the Connecting chamber(right & left)in accordance with the procedure shown in fig.5 .

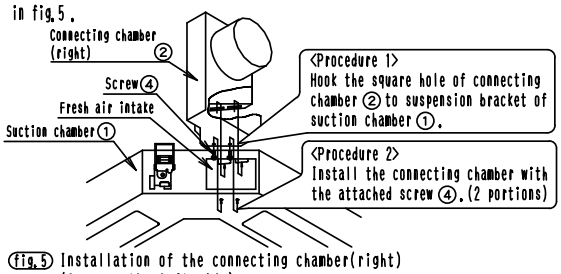

fig.5 Installation of the connecting chamber(right)
(Same as the left side)

<How to tighten the clamp>

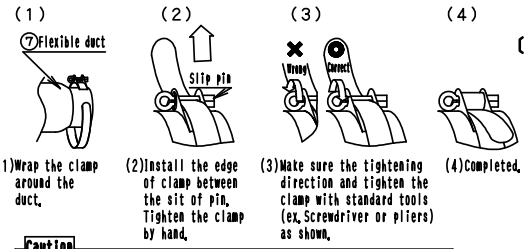

Caution
Do not turn the slit pin reversely.
If turned reversely, ratchet part many break down.

In case of KDDP55D160K

2. Connect the T Joint and Connecting chamber. fig.6

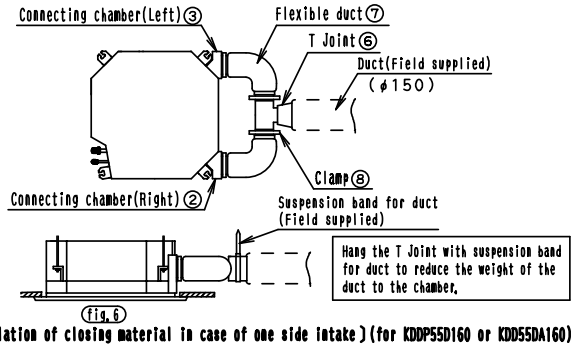

fig.6

(Installation of closing material in case of one side intake)(for KDDP55D160 or KDD55DA160)

- Install the closing material in accordance with the following procedures. fig.7
  Closing material can be used either right or left side opening.

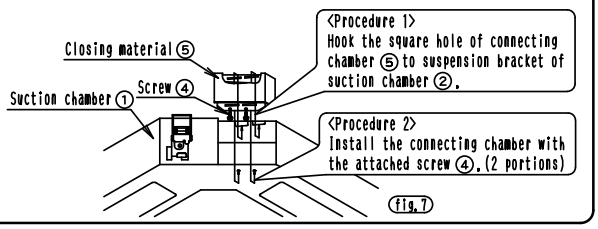

fig.7

❺ Duct connection <Duct:diameter φ150>

1)Attach the duct to the outside of the Branch duct chamber.
- Wrap the duct tape(Field supplied)around the connection to prenent air leak.
- Insulate the duct to prevent condensate.

2)Do not perform the following duct work.

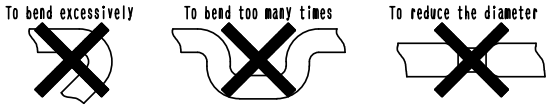

Caution
- follow the local code or regulation to install the duct.
- In case that metal duct is penetrated through wooden wall, make sure the duct and the wall are electrically insulated.
- Install the outdoor unit duct inclined downwardly so that the rain will not get into the duct. (Inclination 1/100 to 1/50)
- Where it contact the outside air, make sure to install screen to avoid birds, small animals or insects getting inside the duct.
- Where it contact the outside air, make sure to install air filter to protect heat exchanger for indoor unit.

❻ Installation of Decoration panel

- Install the Decoration panel in accordance with the installation manual attached to the decoration panel.

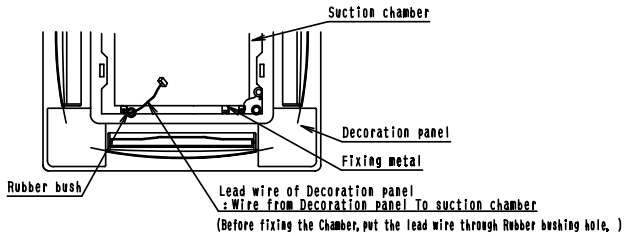

In case of the panel for Wireless remote controller

- Put the Connector for receiver lead wire through rubber bush and connect to the indoor PC board.
- Refer to the installation manual attached to the Wireless remote controller kit(optional)for the detail.

3K011144A

• KDDP55D160 (Without T Joint, Duct Fan)

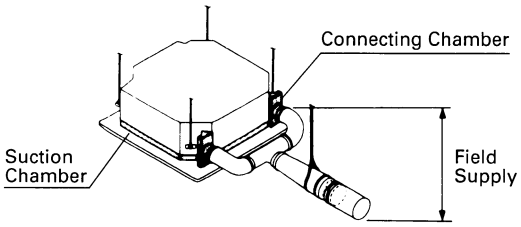

Note:
1. As the principle, the duct fan is unnecessary for 4 meters or less. When needing enough fresh air taking-in, use Kit with Duct Fan of optional, which is shown in the following.
2. The other part of Fresh air intake kit (Duct, T Joint, Air Filter, Hood, etc) is field supplied.
3. In wireless remote controller use, Flexible Duct in the right can not connect.

• Specifications

Kit Name / Item	KDDP55D160
Method of Fresh Air Intake	Fresh Air Intake by The Indoor Unit Fan
Size of Connecting Duct	ϕ150
Applicable Models	For Indoor Unit

• Example of Installation

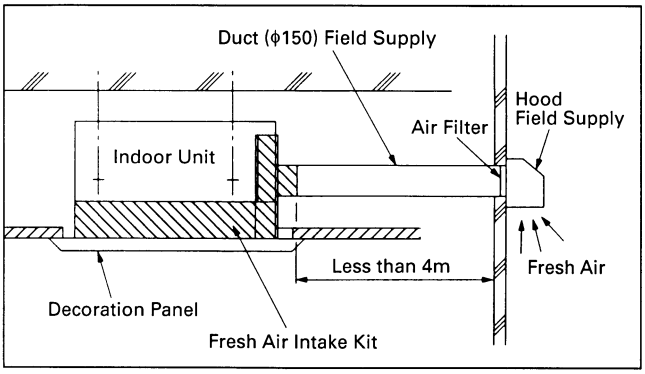

• KDDP55D160K (Attached T Joint, Without Duct Fan)

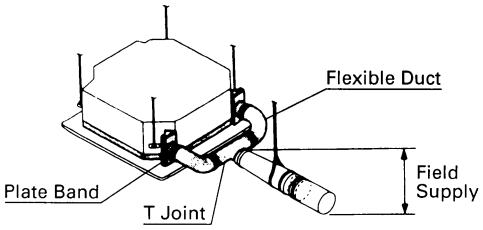

Note:
1. As the principle, the duct fan is unnecessary for 4 meters or less. When needing enough fresh air taking-in, use Kit with Duct Fan of optional, which is shown in the following.
2. The other part of Fresh air intake kit (Duct, T Joint, Air Filter, Hood, etc) is field supplied.
3. It isn't possible to do simultaneous use with wireless remote controller.

• Specifications

Kit Name / Item	KDDP55D160K
Method of Fresh Air Intake	Fresh Air Intake by The Indoor Unit Fan
Size of Connecting Duct	ϕ150
Applicable Models	For Indoor Unit

• Example of Installation

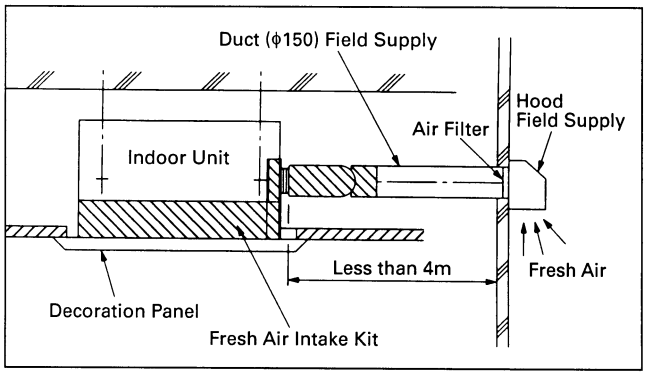

(B0418)

KDDJ55X160 – Fresh Air Intake Kit

The fresh air is taken into the unit by the indoor unit fan or duct fan, which is field supplied. The location of fresh air intake port will be changeable by installing the duct fan.

KDDJ55X160

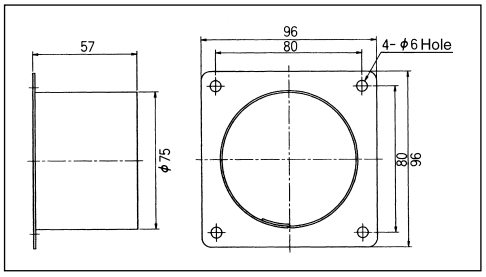

J : D3K2175

Remarks:
1. This kit can be installed to the Ceiling mounted cassette type (Multi-flow).
2. When installing this kit, duct(Nominal dia. : φ75)is required on site.

Contents
Prior to installation, make sure you have the complete kit of parts.

Name	①Duct Flange	② Screws	③Insulation for Duct Flange	④Insulation for Opening of Unit	⑤ Installation Manual
Q'ty	1 piece	4 pieces	1 piece	1 piece	1 piece
Shape		M4×12			

Necessary tools
Philips head screw driver, nipper, cutter etc.

1 Installation procedures of Duct flange

The method of installation varies with indoor unit type.
The unit type can be distinguished by the position of knockout hole.
1. Cut off the knockout hole on the side plate. (Fig. 1)

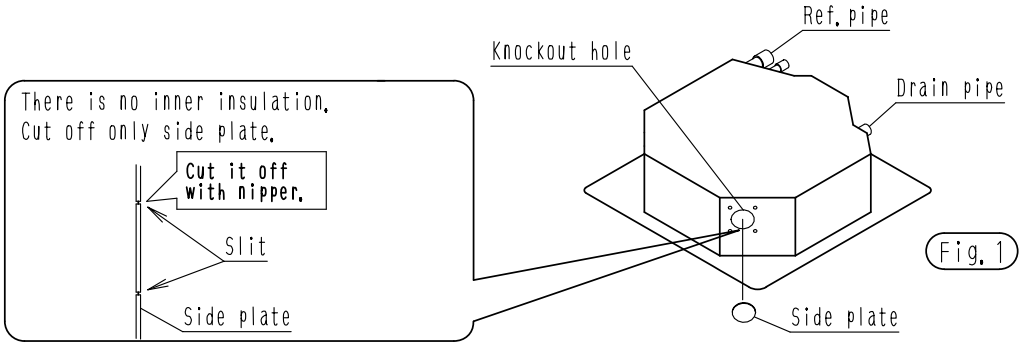

Fig. 1

2. Adhere the insulation④ for opening of unit to the opening. (Fig. 2)

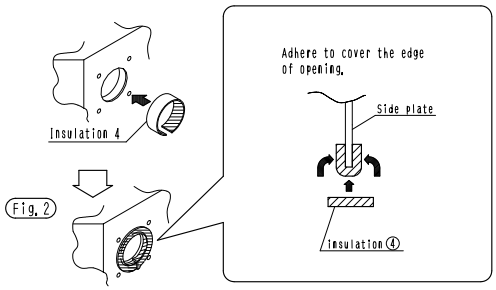

Fig. 2

C : 2P066796B

3. Install the duct flange①with screws②(M4×12, 4 screws)to the opening and adhere the insulation③(Fig.3)

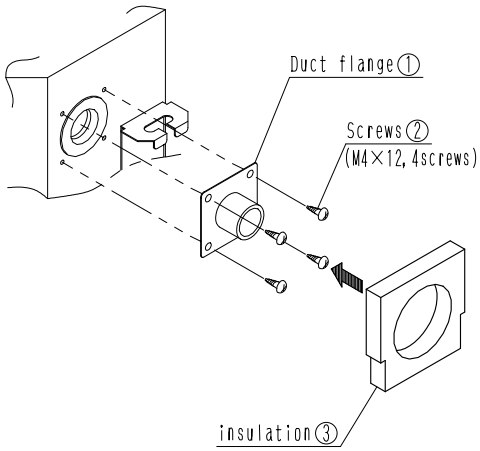

Fig. 3

❷ Installation procedures of Duct<Nominal diameter of duct: φ75>

1. Connect the duct to the duct flange.(Flange fits inside the duct.>(Fig.4)
2. After connection, wrap vinyl tape (field supply)around the duct connection to prevent air leak.

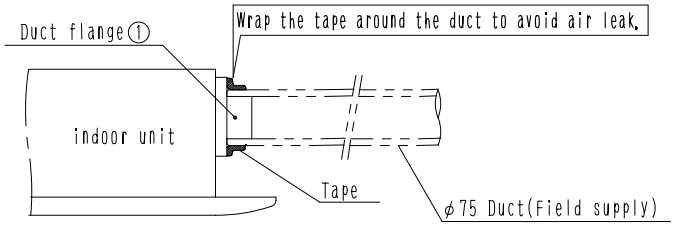

Fig. 4

Precaution

1. ALL ducts must be completely insulated.
2. Do not do the followings when installing duct.

2-1)To bend the duct excessively

WRONG

2-2)To bend the duct too many times

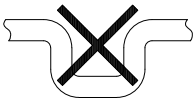

WRONG

2-3)To reduce the duct diameter

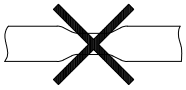

WRONG

3. In case that metal duct is penetrated through wooden walls, make sure the duct and the wall electrically insulated.
4. Install the outdoor unit duct inclined downwardly so that the rain may not get into the duct. (Inclination 1/100 to 1/50)
5. To avoid birds, small animals or insects getting inside the duct, make sure to install net where it contacts the outside air.

C : 2P066796B

3

KAFP556D80 · 160 – High Efficiency Filter Unit (Including Filter Chamber)
KAFP557D80 · 160 – High Efficiency Filter Unit (Including Filter Chamber)

Combination table

High Efficiency Filter Unit (Set)	Replacement High Efficiency Filter	Filter Chamber
KAFP556D80 KAFP557D80	KAFP552H80 KAFP553H80	KDDFP55D160
KAFP556D160 KAFP557D160	KAFP552H160 KAFP553H160	

KAFP552H80 · 160 – Replacement High Efficiency Filter
KAFP553H80 · 160 – Replacement High Efficiency Filter

Specifications

Replacement High Efficiency Filter	KAFP552H80	KAFP552H160	KAFP553H80	KAFP553H160
Filter Chamber	KDDFP55D160			
Collecting Efficiency (%)	65% (NBS Colorimetric method)		90% (NBS Colorimetric method)	
Initial Pressure Loss (Pa)	34 or less			
Final Pressure Loss (Pa)	98 or less			
Filter	Non-woven Fabric of Synthetic Fiber		Non-woven Fabric of Synthetic Fiber	
Life (h)	2,500 h (Dust Concentration 0.15 mg / m^3)		1,800 h (Dust Concentration 0.15 mg / m^3)	
Models to be Applied	25~80 Model	100 · 125 Model	25~80 Model	100 · 125 Model

Precaution at use

1. The high efficiency filter, and the other filter can not be installed together.
2. The unit should be operated with 4-way discharge when the high efficiency filter is installed.
   It can not be applied to the high ceiling room.
3. Field setting by remote controller is necessary when the high efficiency filter is installed.

Dimension

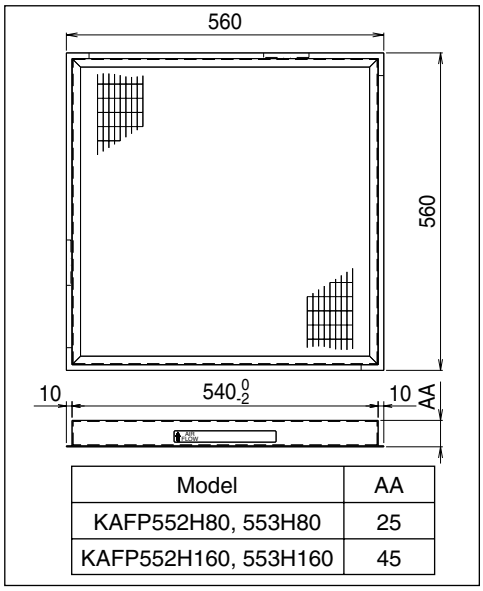

Model	AA
KAFP552H80, 553H80	25
KAFP552H160, 553H160	45

J : D3K04256A

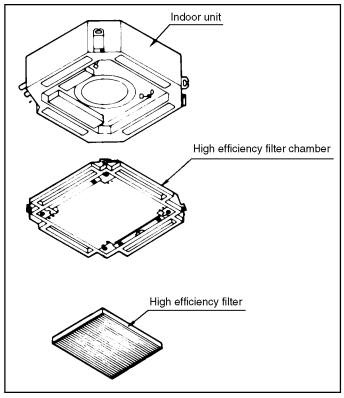

KRP1D98 – Installation Box for Adaptor PCB

Caution

- This box is mountable on the ceiling mounted cassette type (multi-flow type) unit. After confirming the indoor unit model name, mount this box on the unit listed in the table shown right.
- When mounting the box, see also the indoor unit installation manual and the adapter PCB (Printed Circuit Board) mounting instruction.

Kit name	Indoor unit model that party crowded is possible	
KRP1D98	SPLIT	FHYCP50・60・71・100・125DVE FHYCP71・100・125・140DVL FCQ71・100・125・140D(A)V3B
	VRV	FXF25・32・40・50・63・80・100・125LVE FXF25・32・40・50・63・80・100・125LVEC FXFQ25・32・40・50・63・80・100・125MVE

Accessories

Check if the following accessories are included with your kit.

Name	Adapter box	Adapter box cover	Clamp	Screw(1)	Screw(2)	Installation manual
Quantity	1PC.	1PC.	8PCS.	2PCS.	2PCS.	1PC.
Shape				M4×12	M4×8	

1 Mounting the adapter box

《Preparation before wiring》

①Remove the switch box cover and the terminal cover. (Fig.1)
②Open the switch box until it almost touches the bell mouth. (Fig.2)

《Mounting the adapter box》

①Fix the box with the attached fixing screws (1) at two places and the fixing screw (2) at one place. (Fig.3)

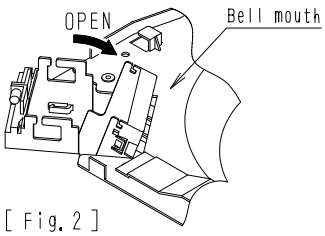

[Fig. 2]

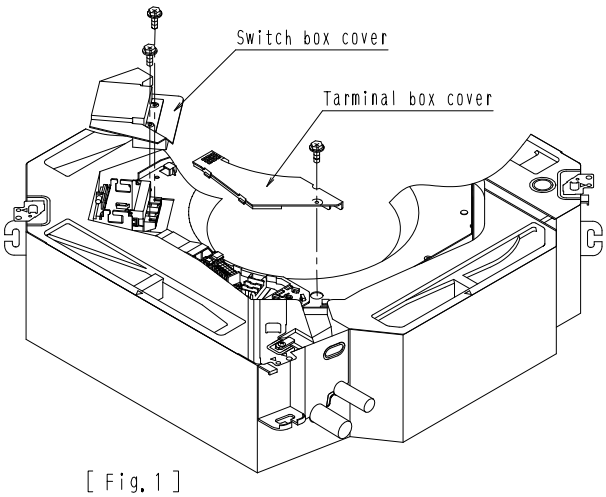

[Fig. 1]

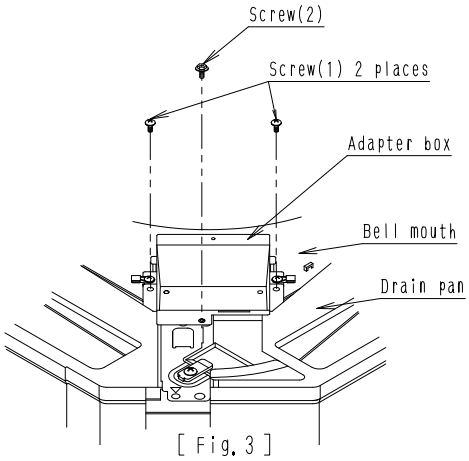

[Fig. 3]

1P086302B

3

❷ Mounting the adapter PCB

《How to mount the adapter PCB》

① Connect the wiring to the adapter PCB.
(The work is easier if the wiring is connected to the PCB first.)
- See the instruction attached to the adapter PCB for where to connect the wiring.

② Mount the adapter PCB on the adapter box and the adapter box cover.

Adapter PCB	Place where to mount
Adapter for wiring	The PCB to be mounted on the adapter box cover. (Fig. 1)
Wiring adapter for electrical appendices(1)(2)	The PCB to be mounted on the adapter box. (Fig. 2)

- For the mounting position of the adapter PCB, see the instruction attached to the adapter PCB.

③ Bind the wiring from the adapter PCB (signal wires, power supply wires) with the attached clamp. (Fig. 1) (Fig. 2)

④ After putting the claw of the cover into the hole of the box, fix them with the attached screw (2). (Fig. 3)
- Take precautions to prevent the wires from getting caught.

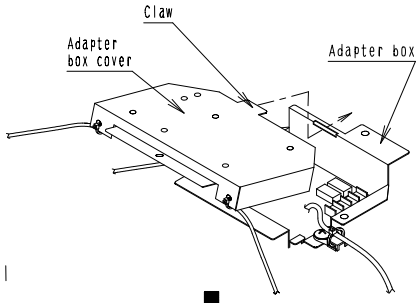

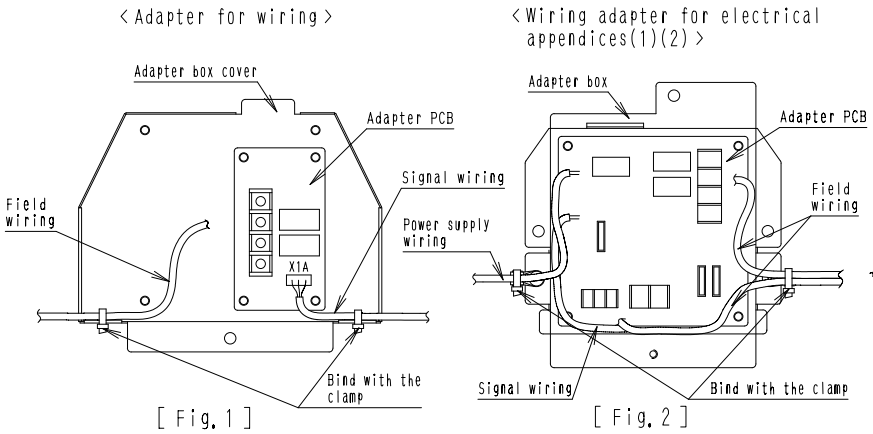

[Fig. 1] [Fig. 2]

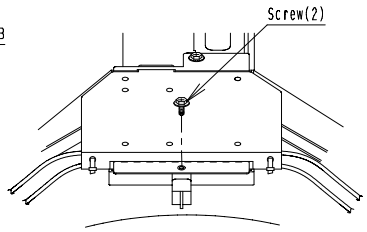

[Fig. 3]

❸ How to handle the wiring

《Wiring to the indoor unit》

Connect the wiring from the adapter PCB to the indoor unit. (signal wires, power supply wires)
- See the instruction attached to the adapter PCB for the place where to connect the wires on the indoor unit.

① Fix the internal wirings.
- Bind the wiring from the adapter box to the indoor unit switch box and to the terminal box according to the drawing shown on the right with the attached clamp.
- Bind the the surplus wires and the other wiring together with the clamp.

② Shut the switch box and secure firmly the switch box cover and the terminal box cover in place in opposite order of removing.
- Take precautions to prevent the wires from getting caught.

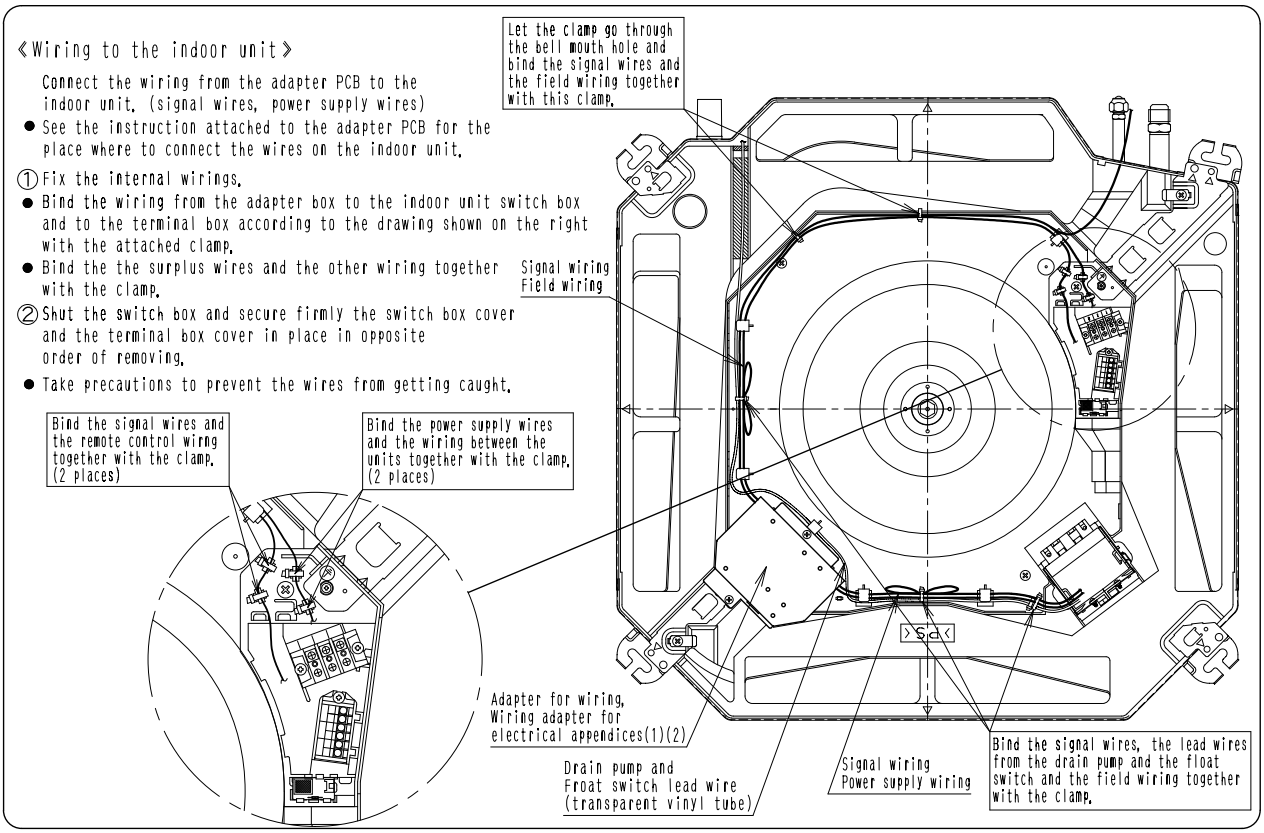

1P086302B

KDDFP55D160 – High Efficiency Filter Chamber

⚠Caution Before starting the installation work, carefully read the following, safety precautions and observe them to ensure safety during work.

- Make sure to use the attached or spcified components to install the prducts. Otherwise, it may cause air leak or the product may fall.
- After installation, check whether there is no abnomality during the trial operation.

REMARKS

- This kit can be installed to the Ceiling Mounted Cassette Type Air Conditioner<Multi-flow type>.
- Before installation, make sure the indoor unit model name.
- Refer to the installation manuals for the indoor unit and the decoration panel.

Notes (In case of useing the Ultra-long life filter)

Ultra-long life filter can be reused by cleaning.
After installtion, instruct filter cleaning periad and removeing to customers.

Components Check if following parts are included with your kit.

Name	Filter chamber	Installation manual
Shape	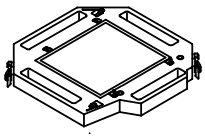	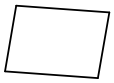
Quantity	1 PC.	1 PC.

Combination table

Kit name	High Effciency filter	Ultra-long life filter	Indoor unit model that party crowed is possible	
KDDFP 55D160 KDDF 55DA160	KAFP552H80 KAF552HA80 or KAFP553H80 KAF553HA80	KAFJ55K160H KAF55KA160H	SPLIT	FHYCP50・60・71DVE FHYCP71DVL
			VRV	FXF25・32・40・50・63・80LVE FXF25・32・40・50・63・80LVEC FXFQ25・32・40・50・63・80MVE
	KAFP552H160 KAF552HA160 or KAFP553H160 KAF553HA160		SPLIT	FHYCP100・125DVE FHYCP100・125・140DVL
			VRV	FXF100・125LVE FXF100・125LVEC FXFQ100・125MVE

❶ Preparation of indoor unit

- When you instell the Ultra-long life filter, the setting by the remote controller is required. Set the remote controller at the field setting mode and change the setting position number as shown on the table. Refer to the operation manual of remote controller for the field setting.

Filter name		Mode No.	Setting switch No.	Setting position No.		Contents of setting
High Effciency filter	Only 80	13 or 23	0	02		———
	Both 80 and 160		1	02		
Ultra-long life filter		10 or 20	0	Less dusty place	01	Filter cleaning period :Every 10,000 hrs
				Dusty place	02	Filter cleaning period :Every 5,000 hrs
			1	02		Filter sign display:Ultra-long life filter

❷ Installation of Filter chamber

1. Remove the decoration panel. (This is not required for the new installtion)
   - Remove the decoration panel in the reverse step when the panel is installed. (Refer to the installation manual of the decoration panel for the details.)
2. Temporarily install the filter chamber to the indoor unit by hanging the lutch on the opposite side of the filter chamber to the hook of the indoor unit body. (2 portions) Temporarily hang the remaining 2 hooks of the filter chamber to the hooks on the sides of the indoor unit. (fig.1) ~ (fig.3)
   (When the indoor unit is already installed, hang the hook to the suspennsion bracket temporarily and fix the hook.)
   ※Installation set outline of the indoor unit (fig.2)
3. Tighten 2hexahead screws located beneath the lutches until the thickness of the sealing material (fig.4) (fig.5) of chamber reduces to 5~8mm.

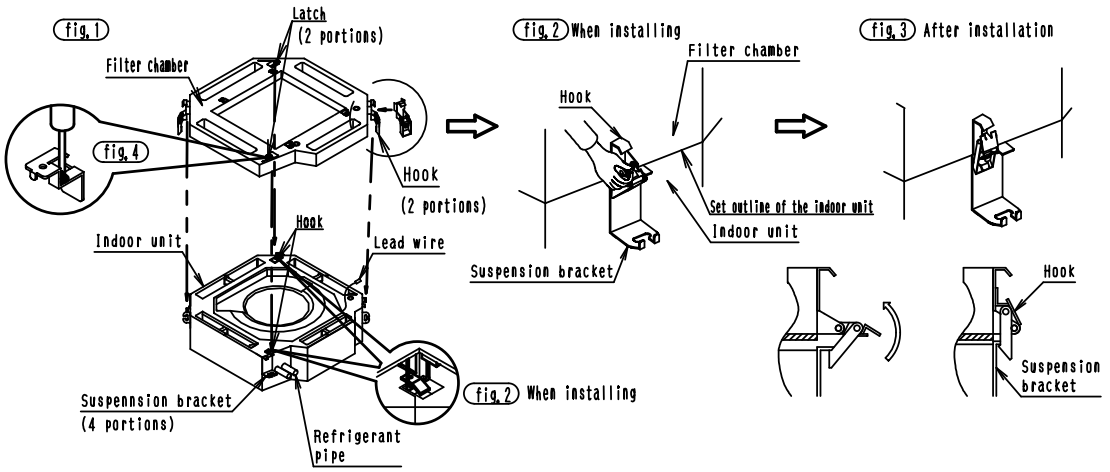

C : 3K011148B

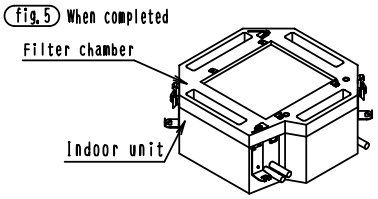

❸ Installation of the indoor unit and the Filter chamber

- Install the indoor unit and the filter chamber.
  Refer to the installation manual of the indoor unit.
  (For the height of the unit, refer to the drawing on the right.)
- Be complete installated refrigerant piping, and drain piping.
- Attach the paper pattern for installation to the indoor unit with screws to protect the indoor unit from dirt. [See below]
  (When the indoor unit is newly installed)
  (See below)
- In case of attaching the chamber after installed indoor unit,
  For the height of the unit, change the height shown on the right drawing.

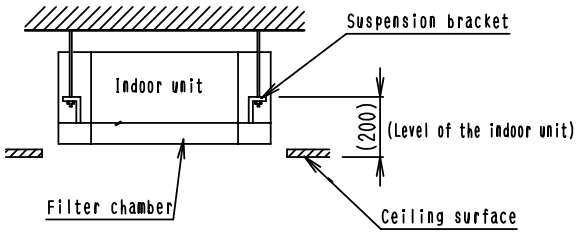

〔Attachment of the paper pattern〕

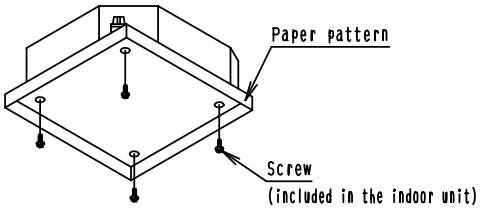

❹ Installation of Decoration panel and the Filter

- Install the Decoration panel in accordance with the installation manual attached to the decoration panel.

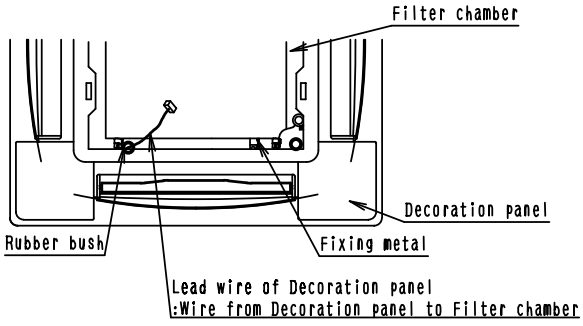

(Before fixing the Chamber, put the lead wire through Rubber bushing hole.)

- Installation of Filter
  After connecting, install the Filter chamber. (fig. 6)

fig. 6

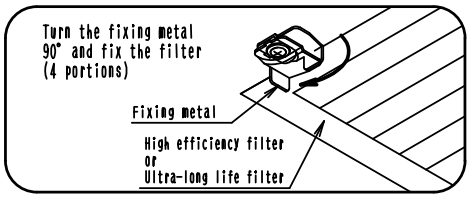

In case of the panel for Wireless remote controller

- Put the Connector for receiver lead wire through rubber bush and connect to the indoor PC board.
- Refer to the installation manual attached to the Wireless remote controller kit(optional)for the detail.

3K011148B

KAFJ551C160 – Long-Life Filter for Decoration Panel (Replacement)

• Specifications

Life	5,000 h (Dust concentration 0.15 mg / m³)
Average collecting efficiency	65 % (Gravimetric method)
Filter material	Mildew proof resin net
Quantity per unit	1
Applicable models	25~125 model

(B0479)

KAFP55D160 – Ultra Long-Life Filter

⚠Caution Before starting the installation work, carefully read the following safety precautions and observe them to ensure safety during work.

- Make sure to use the attached or specified components to install the products. Otherwise, it may cause air leak or the product may fall.
- After installation, check whether there is no abnormality during the trial operation.

REMARKS

- This kit can be installed to the Ceiling Mounted Cassette Type Air Conditioner<Multi-flow type>.
- Before installation, make sure the indoor unit model name.
- Refer to the installation manuals for the indoor unit and the decoration panel.

Notes

Ultra-long life filter can be reused by cleaning.
After installtion, instruct filter cleaning periad and removeing to customers.

Combination table

Kit name	Indoor unit model that party crowded is possible	
KAFP55D160 KAF55DA160	SPLIT	FHYCP50·60·71·100·125DVE FHYCP71·100·125·140DVL
	VRV	FXF25·32·40·50·63·80·100·125LVE FXF25·32·40·50·63·80·100·125LVEC FXFQ25·32·40·50·63·80·100·125MVE

Components Check if following parts are included with your kit.

Name	Ultra-long Life Filter Unit	Installation manual
Shape	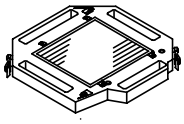	
Quantity	1 PC.	1 PC.

❶ Preparation of indoor unit

- When you instell the Ultra-long life filter, the setting by the remote controller is required. Set the remote controller at the field setting mode and change the setting position number as shown on the table. Refer to the operation manual of remote controller for the field setting.

Mode No.	Setting switch No.	Setting position No.		Contents of setting
10 or 20	0	Less dusty place	01	Filter cleaning period :Every 10,000 hrs
		Dusty place	02	Filter cleaning period :Every 5,000 hrs
	1	02		Filter sign display:Ultra-long life filter

❷ Installation of Ultra-long life filter Unit

1. Remove the decoration panel. (This is not required for the new installtion)
   - Remove the decoration panel in the reverse step when the panel is installed. (Refer to the installation manual of the decoration panel for the details.)
2. REmove the Ultra-long life filter. (fig.1)
3. Temporarily install the filter chamber to the indoor unit by hanging the lutch on the opposite side of the filter chamber to the hook of the indoor unit body. (2 portions)
   Temporarily hang the remaining 2 hooks of the filter chamber to the hooks on the sides of the indoor unit. (fig.2) ~ (fig.4)
   (When the indoor unit is already installed, hang the hook to the suspennsion bracket temporarily and fix the hook.)
   ※Installation set outline of the indoor unit (fig.3)
4. Tighten 2hexahead screws located beneath the lutches until the thickness of the sealing material (fig.5) (fig.6) of chamber reduces to 5~8mm.

(fig.1)

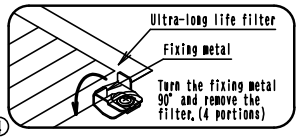

(fig.2)

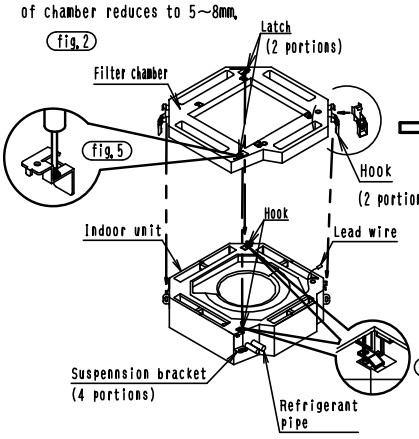

(fig.3) When installing

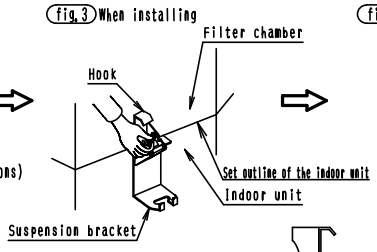

(fig.4) After installation

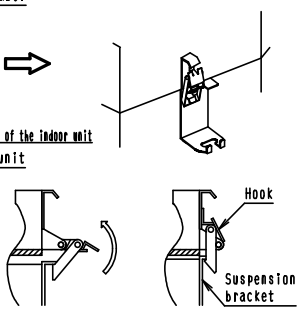

3K011147B

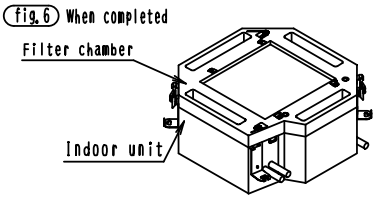

❸ Installation of the indoor unit and the Ultra-long life filter unit

- Install the indoor unit and the Ultra-long life filter unit.
  Refer to the installation manual of the indoor unit.
  (For the height of the unit, refer to the drawing on the right.)
- Be complete installated refrigerant piping, and drain piping.
- Attach the paper pattern for installation to the indoor unit with screws to protect the indoor unit from dirt. [See below]
  (When the indoor unit is newly installed)
  (See below)
- In case of attaching the chamber after installed indoor unit,
  For the height of the unit, change the height shown on the right drawing.

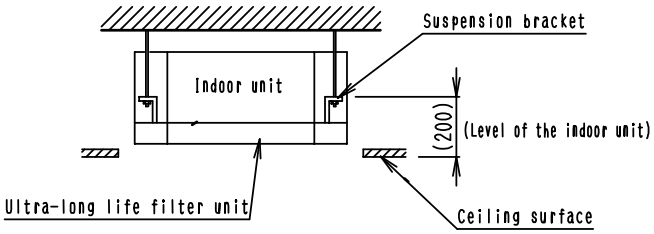

〔Attachment of the paper pattern〕

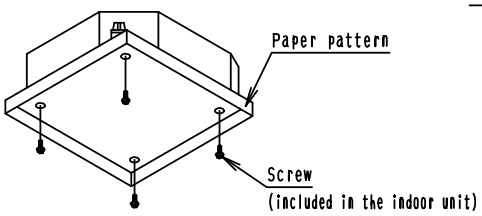

❹ Installation of the Decoration panel and the Ultra-long life filter

- Install the Decoration panel in accordance with the installation manual attached to the decoration panel.

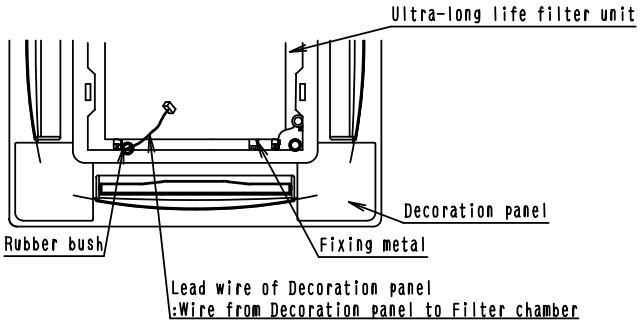

- Installation of the Ultra-long life filter
  After connecting, install the Filter chamber. (fig. 7)

(fig. 7)

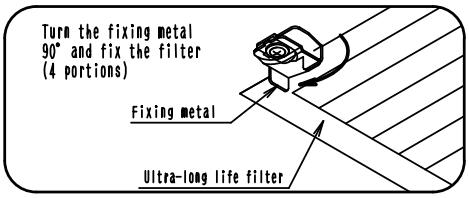

In case of the panel for Wireless remote controller

- Put the Connector for receiver lead wire through rubber bush and connect to the indoor PC board.
- Refer to the installation manual attached to the Wireless remote controller kit(optional)for the detail.

3K011147B

KKSJ55K160 – Chamber Connection Kit

Combining with option accessories (chamber-type)

- This chamber connection kit is for use with the multi-flow set. Refer to the catalog, etc. for details on the separately sold items (chamber-type) to be connected.
- Refer to the table at right for combinations of this kit and other option accessories(chamber-type). Also, be sure to install the fresh air intake (chamber-type) kit above.

	Option accessories (chamber-type)	Above: Fresh air intake kit
below	Air purification unit	○
below	High Effciency filter unit	○
below	Ultra-long life filter unit	○
below	Fresh air intake kit	

Combinations not listed in this table should not be attempted as they will cause malfunctions.

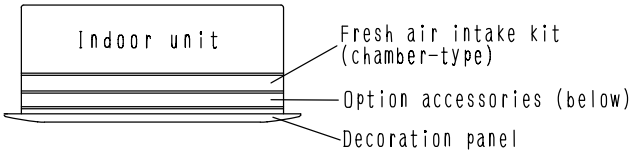

Contents of parts

Check the following parts

Name	Relay harness	Clamping material
Shape	①	②
Quantity	1 PC.	2 PCS.

Installation of the Chamber connection kit.

Refer to the installation (attachment) manuals included with the indoor unit, the option accessories (chamber-type), and Decoration panel for details on installation (attachment).

Caution

Extend the Decoration panel's swing motor lead wire using the included relay harness ① and connect it to the indoor unit. When doing this, use the included clamping material ② to tie the lead wire so it does not droop.

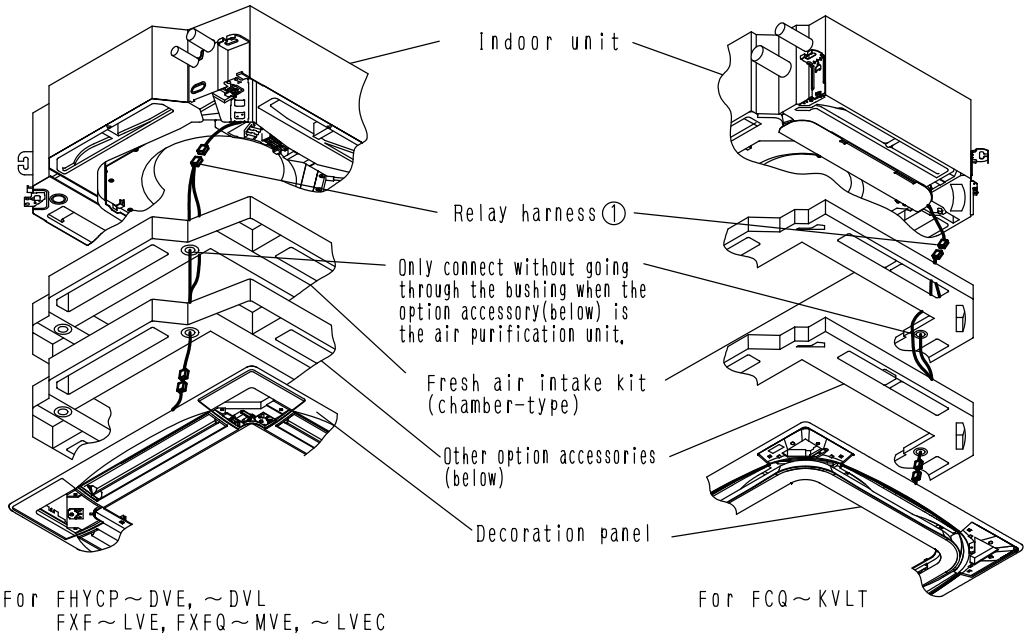

3P089651C

3

KDP55D80 · KDP55D160 – Branch Duct Chamber

REMARKS

- This kit can be installed to the Ceiling Mounted Cassette Type Air Conditioner<Multi-flow type>.
- Before installation, make sure the indoor unit model name.
- Refer to the installation manuals for the indoor unit and the decoration panel.

Contents of kit Check if the following parts are included with this kit.

NAME	Branch Duct Chamber	Screw	Installation Manual	Sealing Material	Tape for fixing the Sealing Material
Shape・Number		M4x16			
Q'ty 80/160	1 PC.	10 PCS.	1 PC.	2 PCS.	2 PCS.

NAME	Indoor unit insulation material				Indoor unit opening seal material			Moisture Absorber for Swing flap	Spacer	Spacer installation screw
Shape・Number	①	②	③	④	⑤ (Small)	⑥A (Large)	⑥B (Large)	⑦ There are 5 types (colors) to match the panel color	⑧	⑨ (M3x10)
Q'ty 80	1 PC.	1 PC.	1 PC.	1 PC.	2 PCS.	2 PCS.	—	3 PCS. (5types)	1 PC.	1 PC.
Q'ty 160						1 PC.	1 PC.			

Combination table

Kit name	Indoor unit model that party crowed is possible	
KDP55D80	SPLIT	FHYCP50・60・71DVE FHYCP71DVL FCQ71D(A)V3B
	VRV	FXF25・32・40・50・63・80LVE FXFQ25・32・40・50・63・80MVE FXF25・32・40・50・63・80LVEC
KDP55D160	SPLIT	FHYCP100・125DVE FHYCP100・125・140DVL FCQ100・125・140D(A)V3B
	VRV	FXF100・125LVE FXFQ100・125MVE FXF100・125LVEC

❶ Pre-installation preparations

This branch duct can be used for 4 directions independently or 2 directions at once.

- You may choose the following outlet directions for this branch duct chamber. Select the outlet direction that best fits the shape of the room or the installation location. (Outlet directions other than the below cannot be selected)
- Select the duct length and outlet vent according to the external static sound pressure and fan strength characteristics(refer to the technical guide).

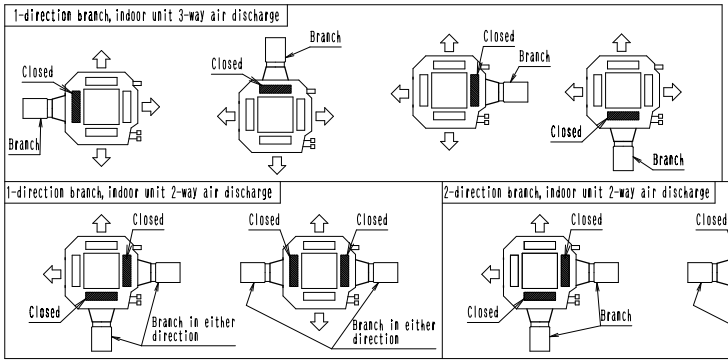

Caution

- Be sure to completely seal off the air outlet on the indoor unit to which the branch duct chamber is attached. If the seal in imperfect, this may cause water splattering and condensation.
  (REfer to ❹ Installation of the sealing material to the indoor unit)
- When attaching the Branch Duct Chamber, be sure to perform the setting for indoor unit.
  (Refer to ❺ Setting for Indoor unit)

❷ Installation of the Branch Duct Chamber

When installing the indoor unit after attaching the Branch Duct Chamber (for a new installation), avoid applying undue pressure on the Branch Duct Chamber. (This may damage it.)

(1) Select the position to attach the Branch Duct Chamber. (fig. 1)

(2) Attach the Branch duct chamber to the indoor unit following the steps below. (the fig. shows the ① side.)

1) Cut off the indoor unit side panel to which the Branch duct chamber will be attached along the slit. Next, cut off the interior insulating material along the groove. (Cut off the slit part using nippers, and the groove part using cutters.) (fig. 2)

2) Attach the sealing material so that it hides the gap between the side panel and interior insulating material. (fig. 3)

- First attach the indoor unit opening seal material (small) ⑤ to right and left of the opening, then the indoor unit opening seal material (large) ⑥ above and below. At this time, fold the indoor unit opening seal material in so that the gap between the side panel and interior insulating material is hidden.

3) Attach the Branch duct chamber. (fig. 4)

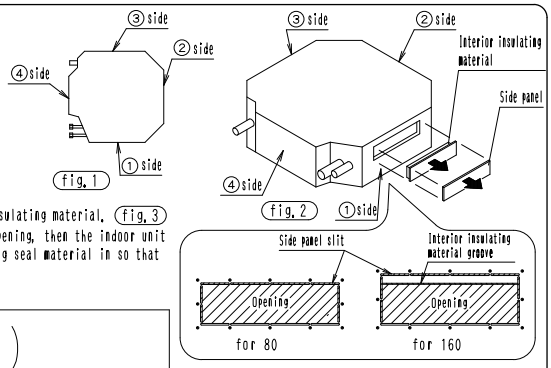

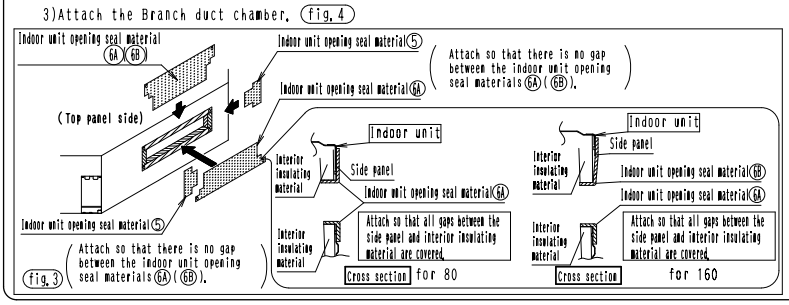

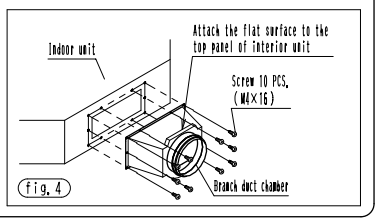

1P089650C

(3) Attach the Indoor unit insulating material to the indoor unit. (The fig. shows the ① side.) (fig. 5)

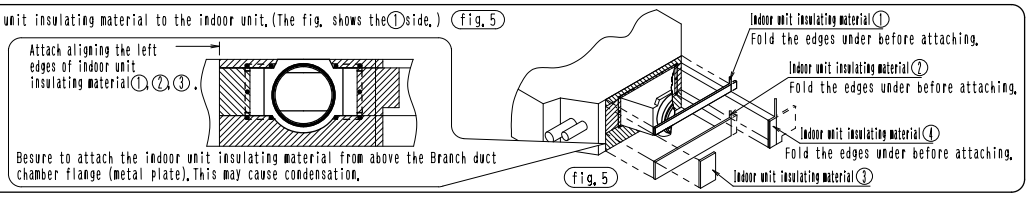

❸ Duct connection

《Duct: KDP55D80・KDP55DA80 …diameter φ150
KDP55D160・KDP55DA160…diameter φ200》

1)Attach the duct to the outside of the Branch duct chamber. (fig. 6)
- Wrap the duct tape(Field supplied)around the connection to prevent air leak.
- Insulate the duct to prevent condensate.

2)Do not perform the following duct work.

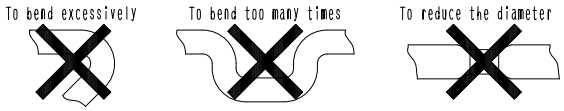

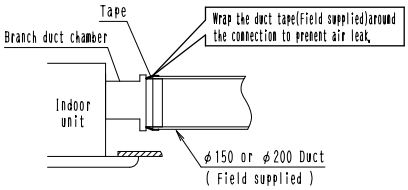

fig. 6

Caution
- follow the local code or regulation to install the duct.
- In case that metal duct is penetrated through wooden wall, make sure the duct and the wall are electrically insulated.

❹ Installation of the sealing material to the indoor unit

《The sealing material included in this kit is enough for two air outlets.》

- Select which air outlet to be closed off referring to ❶ Pre-installation preparations. Be sure to close off the branch duct attachment side.

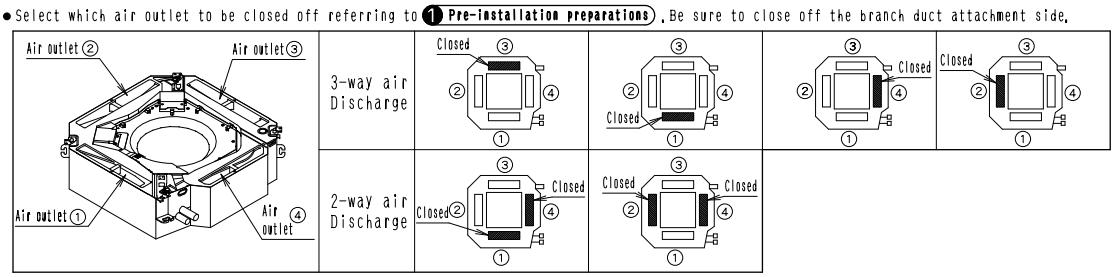

(1)Prepare the sealing material and the tape for fixing the sealing material according to the air outlet No. To be closed.
- Cut off the sealing material and the tape along the perforated lines (marked – – –).
- Adhere the sealing material to tape. (Make sure that the sealing material is placed at the center of the tape.)

(2)Adhere the sealing material prepared according to the procedure(1)to the indoor unit air outlet.

Example)For closing the air outlet ①

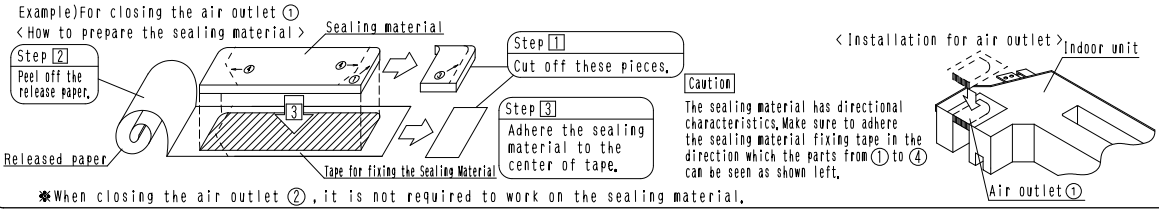

※When closing the air outlet ②, it is not required to work on the sealing material.

❺ Setting for indoor unit

- When you install the Branch duct chamber, the setting by the remote controller is required.
  Set the remote controller at the field setting mode and change the setting position number as shown on the table.
  Refer to the operation manual of remote controller for the field setting.

Branch and air discharge patterns	Mode No.	Setting switch No.	Setting position No.
1-direction branch, 3-way air Discharge	13 or 23	1	02
1-direction branch, 2-way air Discharge or 2-direction branch, 2-way air Discharge			03

❻ Installation of Decoration panel

Please turn off the power supply for safety absolutely, before you do affixation of insulation and connected work of swing conector.

Refer to the installation manual for the decoration panel. After installing the decoration panel, make sure there are no gaps between it and the indoor unit.
- Please install spacer ⑧ on the swing motor with the spacer installation screw ⑨.

- Attach the horizontal flap moisture absorbing material to the horizontal flaps on the Air outlet as per the figure at bottom. (Attach, matching the color of the panel.)

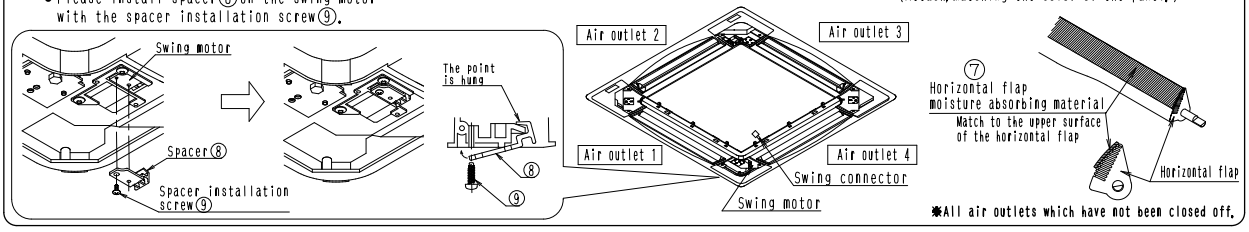

※All air outlets which have not been closed off.

1P089650C

FXKQ-MA
Ceiling Mounted Cassette
Corner Type

1. Features 112
2. Specifications 113
3. Dimensions 114
4. Piping Diagrams 116
5. Wiring Diagrams 117
6. Electric Characteristics 118
7. Capacity Tables 119
   7.1 Cooling Capacity 119
8. Sound Levels 120
9. Installation 121
10. Accessories 124

1. Features

215 mm-thick body features discreet, slim design and offers a wide variety of discharge methods and mounting such as in corners or in suspended ceilings, etc.

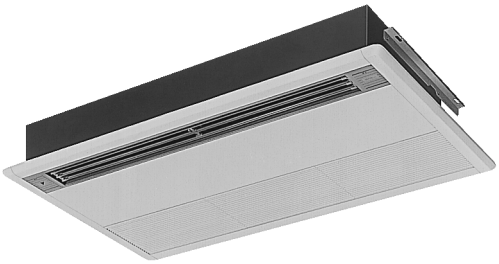

- Single-flow type offers effective air discharge from corners of from a suspended ceiling.

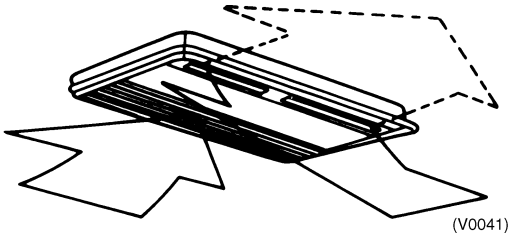

- Thin, discreet design enables mounting when the ceiling pocket is as shallow as 22 cm
- Temperature Distribution (FXKQ63MA : downward discharge angle 65° in heating.).

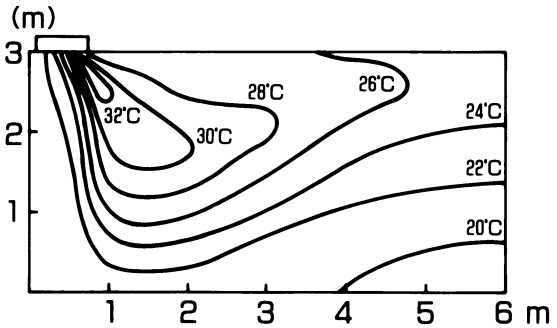

(V0042)

- Air velocity Distribution (FXKQ63MA : downward discharge angle 65° in heating.)

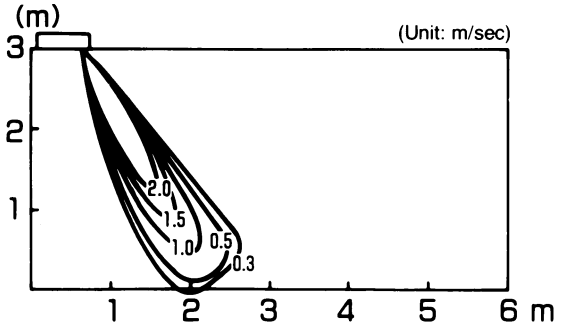

(V0043)

- Air volume switch built into the main body allows mounting in ceilings as high as 3.8 m. This unit is even able to handle spaces with a split level ceiling by accurately adjusting air volume in accordance with the ceiling height.

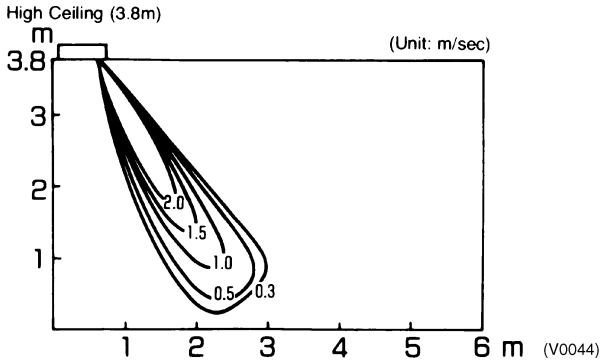

- The 63 class (equivalent to 2.5 HP) features extremely quiet operation, only 42 dBA of sound level.
- In addition to downward discharge, front discharge (straight discharge, neither angled upward nor downward) can be provided by mounting an air discharge unit (optional) to the front of the body; can be mounted even with difficult elements such as suspended ceilings and sagging walls. A combination of front and downward discharge is also possible. (Auto-swing cannot be used with front discharge.)

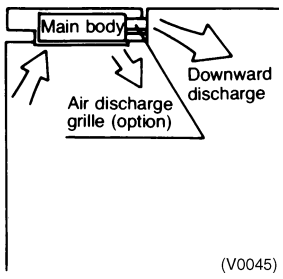

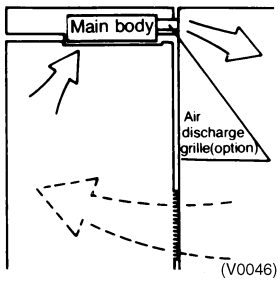

* Set for front discharge using a suspended ceiling

Downward discharge is shut off and air is blown straight out (front discharge)

- Equipped with a programmed drying mechanism that dehumidifies while inhibiting changes in room temperature.
- Includes as standard equipment a long-life filter that is maintenance-free for approximately one year. (Treated to mold resistant.)
- Equipped with drain pump kit that makes possible draining in the upward direction up to 500 mm from the ceiling surface.
- Decoration panel is thin and unimposing, doesn't clash with interior design and provides an excellent finishing touch for the ceiling. (Available in white.)
- If the ceiling pocket is shallow and the main body will not fit, a thick panel that provides aesthetically appealing cover for the exposed portion (up to 20 mm) is available as an option.

2. Specifications

Ceiling Mounted Cassette Corner Type

Model				FXKQ25MAVE	FXKQ32MAVE	FXKQ40MAVE	FXKQ63MAVE
*1 Cooling Capacity (19.5°CWB)			kcal/h	2,500	3,200	4,000	6,300
			Btu/h	9,900	12,600	16,000	24,900
			kW	2.9	3.7	4.7	7.3
*2 Cooling Capacity (19.0°CWB)			kW	2.8	3.6	4.5	7.1
Casing				Galvanized Steel Plate	Galvanized Steel Plate	Galvanized Steel Plate	Galvanized Steel Plate
Dimensions: (H×W×D)			mm	215×1,110×710	215×1,110×710	215×1,110×710	215×1,310×710
Coil (Cross Fin Coil)	Rows×Stages×Fin Pitch		mm	2×11×1.75	2×11×1.75	2×11×1.75	3×11×1.75
	Face Area		m²	0.180	0.180	0.180	0.226
Fan	Model			3D12H1AN1V1	3D12H1AN1V1	3D12H1AP1V1	4D12H1AJ1V1
	Type			Sirocco Fan	Sirocco Fan	Sirocco Fan	Sirocco Fan
	Motor Output × Number of Units		W	15×1	15×1	20×1	45×1
	Air Flow Rate (H/L)	50 Hz	m³/min	11/9	11/9	13/10	18/15
			cfm	388/318	388/318	459/353	635/530
	Drive			Direct Drive	Direct Drive	Direct Drive	Direct Drive
Temperature Control				Microprocessor Thermostat for Cooling and Heating	Microprocessor Thermostat for Cooling and Heating	Microprocessor Thermostat for Cooling and Heating	Microprocessor Thermostat for Cooling and Heating
Sound Absorbing Thermal Insulation Material				Polyethylene Foam	Polyethylene Foam	Polyethylene Foam	Polyethylene Foam
Piping Connections	Liquid Pipes		mm	φ6.4 (Flare Connection)	φ6.4 (Flare Connection)	φ6.4 (Flare Connection)	φ9.5 (Flare Connection)
	Gas Pipes		mm	φ12.7 (Flare Connection)	φ12.7 (Flare Connection)	φ12.7 (Flare Connection)	φ15.9 (Flare Connection)
	Drain Pipe		mm	VP25 (External Dia. 32 Internal Dia. 25)	VP25 (External Dia. 32 Internal Dia. 25)	VP25 (External Dia. 32 Internal Dia. 25)	VP25 (External Dia. 32 Internal Dia. 25)
Machine Weight (Mass)			kg	31	31	31	34
*4 Sound Level (H/L) (220V)			dBA	38/33	38/33	40/34	42/37
Safety Devices				Fuse. Thermal Fuse for Fan Motor.	Fuse. Thermal Fuse for Fan Motor.	Fuse. Thermal Fuse for Fan Motor.	Fuse. Thermal Fuse for Fan Motor.
Refrigerant Control				Electronic Expansion Valve	Electronic Expansion Valve	Electronic Expansion Valve	Electronic Expansion Valve
Connectable Outdoor Units				R-410A P Series	R-410A P Series	R-410A P Series	R-410A P Series
Decoration Panels (Option)	Model			BYK45FJW1	BYK45FJW1	BYK45FJW1	BYK71FJW1
	Panel Color			White (10Y9/0.5)	White (10Y9/0.5)	White (10Y9/0.5)	White (10Y9/0.5)
	Dimensions: (H×W×D)		mm	70×1,240×800	70×1,240×800	70×1,240×800	70×1,440×800
	Air Filter			Resin Net (with Mold Resistant)	Resin Net (with Mold Resistant)	Resin Net (with Mold Resistant)	Resin Net (with Mold Resistant)
	Weight		kg	8.5	8.5	8.5	9.5
Standard Accessories				Operation Manual. Installation Manual. Paper Pattern for Installation. Drain Hose. Clamp Metal. Insulation for Fitting. Sealing Pads. Clamps. Screws. Washers. Positioning Jig for Installation. Insulation for Hanger Bracket. Air Outlet Blocking Pad.	Operation Manual. Installation Manual. Paper Pattern for Installation. Drain Hose. Clamp Metal. Insulation for Fitting. Sealing Pads. Clamps. Screws. Washers. Positioning Jig for Installation. Insulation for Hanger Bracket. Air Outlet Blocking Pad.	Operation Manual. Installation Manual. Paper Pattern for Installation. Drain Hose. Clamp Metal. Insulation for Fitting. Sealing Pads. Clamps. Screws. Washers. Positioning Jig for Installation. Insulation for Hanger Bracket. Air Outlet Blocking Pad.	Operation Manual. Installation Manual. Paper Pattern for Installation. Drain Hose. Clamp Metal. Insulation for Fitting. Sealing Pads. Clamps. Screws. Washers. Positioning Jig for Installation. Insulation for Hanger Bracket. Air Outlet Blocking Pad.
Drawing No.				C : 3D038813A			

Note:

*1 Indoor temp. : 27°CDB, 19.5°CWB / outdoor temp. : 35°CDB / Equivalent piping length : 7.5 m, level difference : 0 m.
*2 Indoor temp. : 27°CDB, 19.0°CWB / outdoor temp. : 35°CDB / Equivalent piping length : 7.5 m, level difference : 0 m.
3 Capacities are net, including a deduction for cooling (an addition for heating) for indoor fan motor heat.
*4 Anechoic chamber conversion value, measured at a point 1 m in front of the unit and 1m downward. During actual operation, these values are normally somewhat higher as a result of ambient conditions.
5 Refer to page 118 for Fan Motor Input.

Conversion Formulae
kcal/h=kW×860 Btu/h=kW×3412 cfm=m³/min×35.3

3. Dimensions

FXKQ25MA + BYK45FJW1 (Decoration Panel)
FXKQ32MA + BYK45FJW1 (Decoration Panel)
FXKQ40MA + BYK45FJW1 (Decoration Panel)

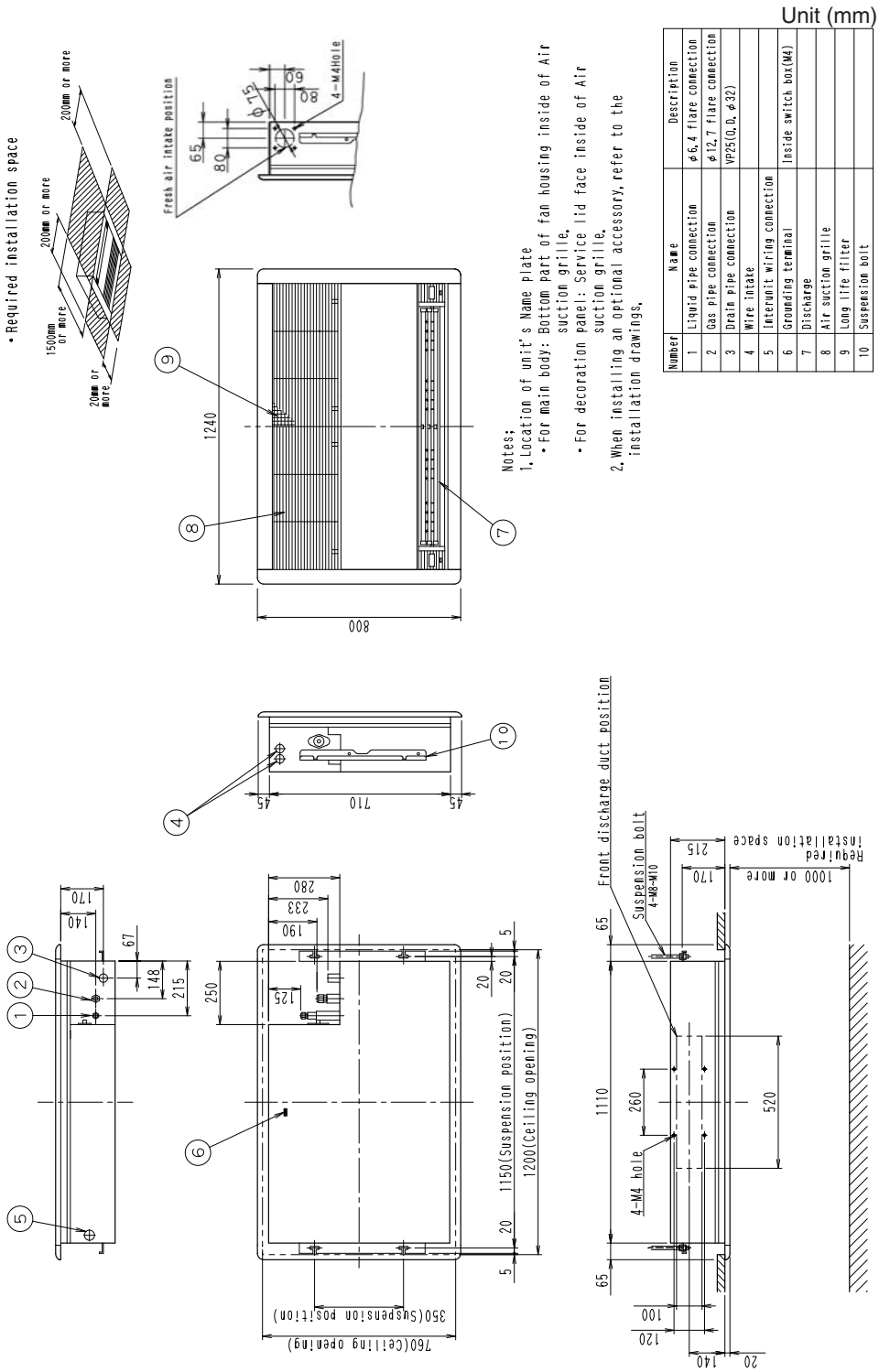

Number	Name	Description
1	Liquid pipe connection	φ6.4 flare connection
2	Gas pipe connection	φ12.7 flare connection
3	Drain pipe connection	VP25(O.D. φ32)
4	Wire intake	
5	Interunit wiring connection	
6	Grounding terminal	Inside switch box(M4)
7	Discharge	
8	Air suction grille	
9	Long life filter	
10	Suspension bolt	

FXKQ63MA + BYK71FJW1 (Decoration Panel)

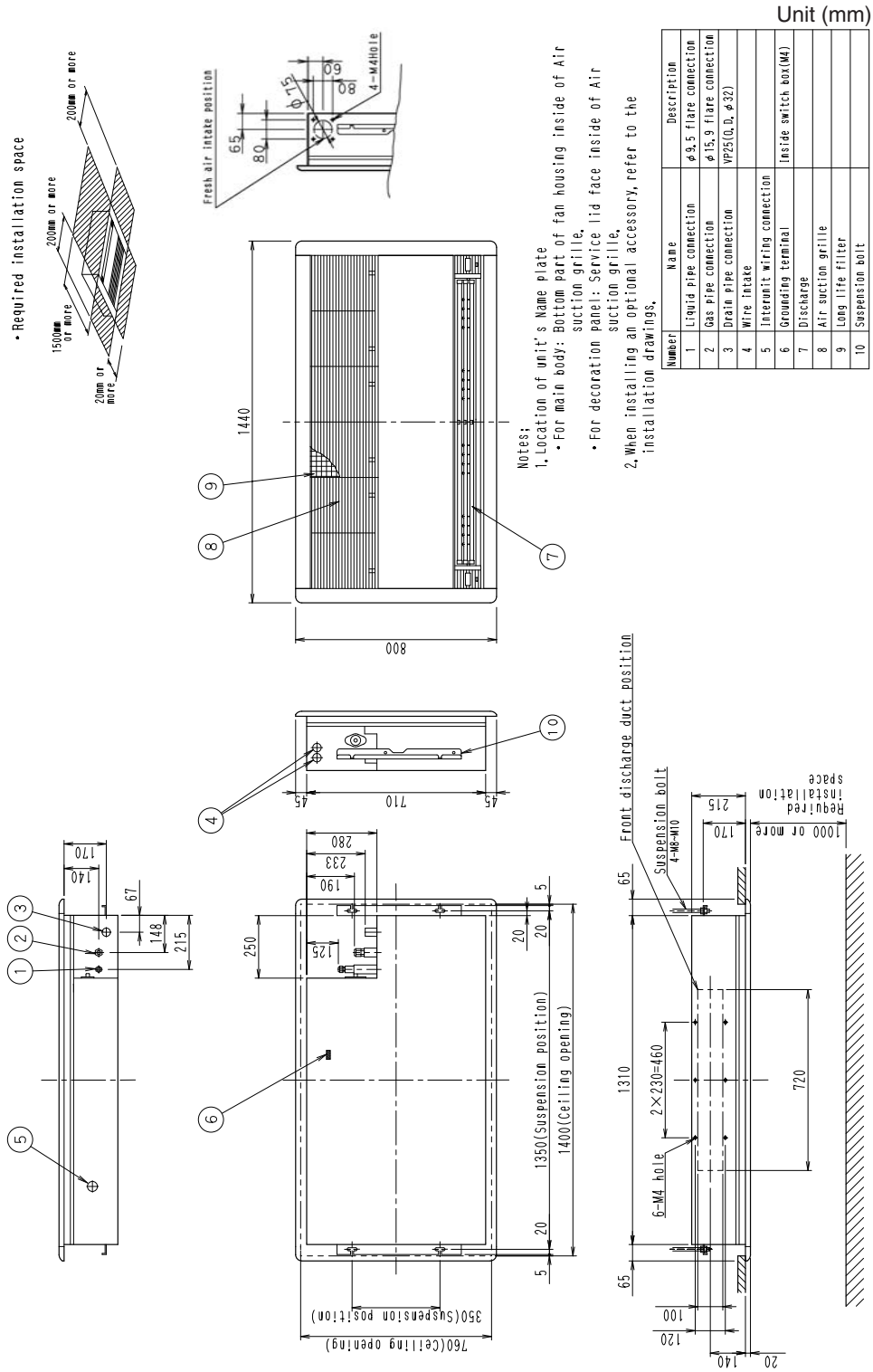

Number	Name	Description
1	Liquid pipe connection	φ9.5 flare connection
2	Gas pipe connection	φ15.9 flare connection
3	Drain pipe connection	VP25(O.D. φ32)
4	Wire intake	
5	Interunit wiring connection	Inside switch box(M4)
6	Grounding terminal	
7	Discharge	
8	Air suction grille	
9	Long life filter	
10	Suspension bolt	

4. Piping Diagrams

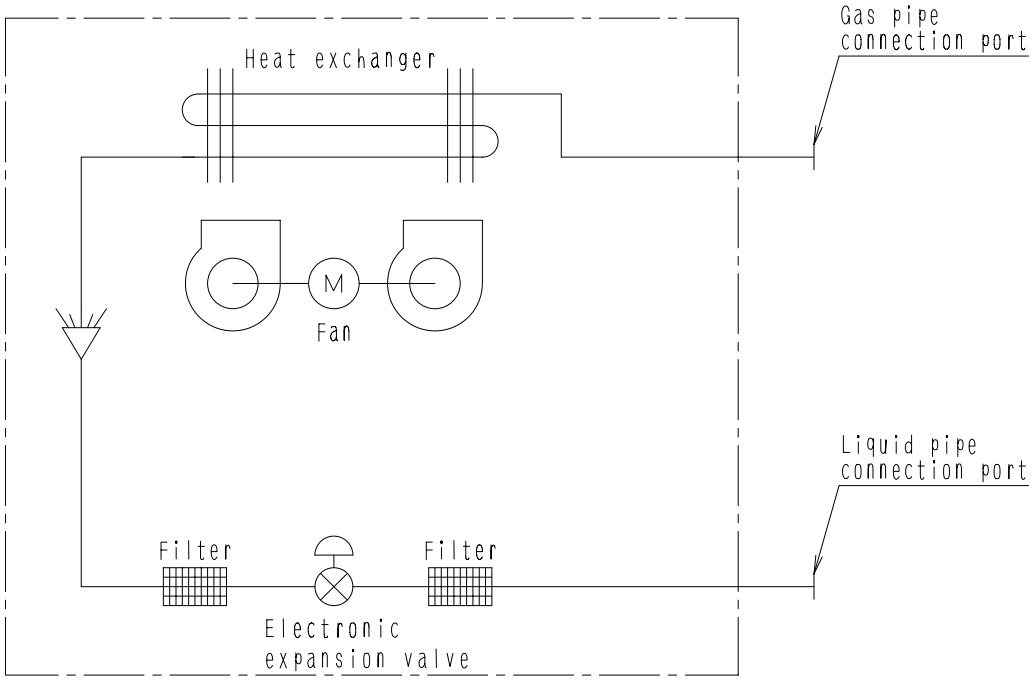

4D034245B

■ **Refrigerant pipe connection port diameters**

(mm)

Model	Gas	Liquid
FXKQ25 · 32 · 40MA	ϕ12.7	ϕ6.4
FXKQ63MA	ϕ15.9	ϕ9.5

5. Wiring Diagrams

FXKQ25 · 32 · 40 · 63MAVE

3D039564C

4

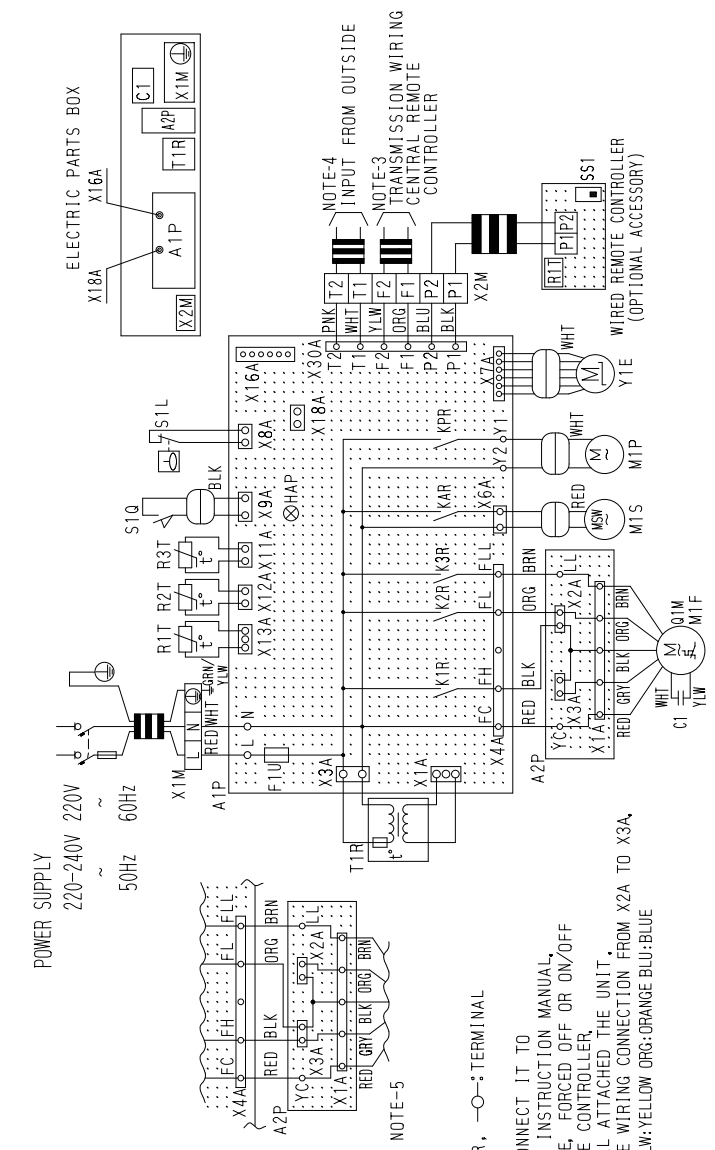

	INDOOR UNIT		
A1P	PRINTED CIRCUIT BOARD	R1T	THERMISTOR(AIR)
A2P	TERMINAL BOARD	R2T·R3T	THERMISTOR(COIL)
C1	CAPACITOR (M1F)	S1L	FLOAT SWITCH
F1U	FUSE(Ⓑ,5A,250V)	S1Q	LIMIT SWITCH(SWING FLAP)
HAP	LIGHT EMITTING DIODE (SERVICE MONITOR-GREEN)	T1R	TRANSFORMER(220-240V/22V)
		X1M	TERMINAL BLOCK(POWER)
		X2M	TERMINAL BLOCK(CONTROL)
K1R-K3R	MAGNETIC RELAY(M1F)	Y1E	ELECTRONIC EXPANSION VALVE
KAR	MAGNETIC RELAY(M1S)		
KPR	MAGNETIC RELAY(M1P)		WIRED REMOTE CONTROLLER
M1F	MOTOR (INDOOR FAN)	R1T	THERMISTOR(AIR)
M1P	MOTOR (DRAIN PUMP)	SS1	SELECTOR SWITCH (MAIN/SUB)
M1S	MOTOR (SWING FLAP)		CONNECTOR FOR OPTIONAL PARTS
Q1M	THERMO SWITCH (M1F EMBEDDED)	X16A	CONNECTOR(ADAPTOR FOR WIRING)
		X18A	CONNECTOR(WIRING ADAPTOR FOR ELECTORICAL APPENDICES)

NOTES)
1. ▭: TERMINAL BLOCK, ▭, ▷: CONNECTOR, —○—: TERMINAL
2. ═: FIELD WIRING
3. IN CASE USING CENTRAL REMOTE CONTROLLER, CONNECT IT TO THE UNIT IN ACCORDANCE WITH THE ATTACHED INSTRUCTION MANUAL.
4. WHEN CONNECTING THE INPUT WIRES FROM OUTSIDE, FORCED OFF OR ON/OFF CONTROL OPERATION CAN BE SELECTED BY REMOTE CONTROLLER. IN DETAILS, REFER TO THE INSTALLATION MANUAL ATTACHED THE UNIT.
5. IN CASE HIGH E.S.P. OPERATION, CHANGE OVER THE WIRING CONNECTION FROM X2A TO X3A.
6. SYMBOLS SHOW AS FOLLOWS.(PNK:PINK WHT:WHITE YLW:YELLOW ORG:ORANGE BLU:BLUE BLK:BLACK RED:RED BRN:BROWN GRY:GRAY)
7. USE COPPER CONDUCTORS ONLY.

6. Electric Characteristics

Units					Power supply		IFM		Input(W)	
Model	Type	Hz	Volts	Voltage range	MCA	MFA	KW	FLA	Cooling	Heating
FXKQ25MA	VE	50	220-240	MAX. 264 Min. 198	0.3	15	0.015	0.2	66	46
FXKQ32MA					0.3	15	0.015	0.2	66	46
FXKQ40MA					0.3	15	0.020	0.2	76	56
FXKQ63MA					0.5	15	0.045	0.4	105	85

Symbols:

MCA : Min. Circuit Amps (A)
MFA : Max. Fuse Amps (See note 5)
KW : Fan Motor Rated Output(KW)
FLA : Full Load Amps(A)
IFM : Indoor Fan Motor

Note:

1. Voltage range

   Units are suitable for use on electrical systems where voltage supplied to unit terminals is not below or above listed range limits.

2. Maximum allowable voltage unbalance between phases is 2%.

3. MCA/MFA

   MCA = 1.25 X FLA

   MFA ≦ 4 X FLA
   (Next lower standard fuse rating. Min.15A)

4. Select wire size based on the MCA.

5. Instead of fuse, use Circuit Breaker.

C : 4D037076B

7. Capacity Tables

7.1 Cooling Capacity

FXKQ-MA [50Hz]

Cooling capacity

Unit Size	Outdoor air temp. °CDB	Indoor air temp. 14.0°CWB 20°CDB TC	SC	16.0°CWB 23°CDB TC	SC	18.0°CWB 26°CDB TC	SC	19.0°CWB 27°CDB TC	SC	20.0°CWB 28°CDB TC	SC	22.0°CWB 30°CDB TC	SC	24.0°CWB 32°CDB TC	SC
25	10.0	1.9	1.9	2.3	2.2	2.6	2.3	2.8	2.4	3.0	2.5	3.4	2.5	3.7	2.5
	12.0	1.9	1.9	2.3	2.2	2.6	2.3	2.8	2.4	3.0	2.5	3.4	2.5	3.6	2.5
	14.0	1.9	1.9	2.3	2.2	2.6	2.3	2.8	2.4	3.0	2.5	3.4	2.5	3.6	2.5
	16.0	1.9	1.9	2.3	2.2	2.6	2.3	2.8	2.4	3.0	2.5	3.4	2.5	3.5	2.4
	18.0	1.9	1.9	2.3	2.2	2.6	2.3	2.8	2.4	3.0	2.5	3.4	2.5	3.5	2.4
	20.0	1.9	1.9	2.3	2.2	2.6	2.3	2.8	2.4	3.0	2.5	3.4	2.5	3.4	2.4
	21.0	1.9	1.9	2.3	2.2	2.6	2.3	2.8	2.4	3.0	2.5	3.4	2.5	3.4	2.4
	23.0	1.9	1.9	2.3	2.2	2.6	2.3	2.8	2.4	3.0	2.5	3.3	2.5	3.4	2.3
	25.0	1.9	1.9	2.3	2.2	2.6	2.3	2.8	2.4	3.0	2.5	3.3	2.5	3.3	2.3
	27.0	1.9	1.9	2.3	2.2	2.6	2.3	2.8	2.4	3.0	2.5	3.2	2.4	3.3	2.3
	29.0	1.9	1.9	2.3	2.2	2.6	2.3	2.8	2.4	3.0	2.5	3.2	2.4	3.2	2.3
	31.0	1.9	1.9	2.3	2.2	2.6	2.3	2.8	2.4	3.0	2.5	3.1	2.4	3.2	2.3
	33.0	1.9	1.9	2.3	2.2	2.6	2.3	2.8	2.4	3.0	2.5	3.1	2.4	3.1	2.3
	35.0	1.9	1.9	2.3	2.2	2.6	2.3	2.8	2.4	3.0	2.5	3.0	2.4	3.1	2.3
	37.0	1.9	1.9	2.3	2.2	2.6	2.3	2.8	2.4	2.9	2.5	3.0	2.4	3.0	2.3
	39.0	1.9	1.9	2.3	2.2	2.6	2.3	2.8	2.4	2.9	2.5	2.9	2.3	3.0	2.2
32	10.0	2.4	2.2	2.9	2.5	3.4	2.6	3.6	2.7	3.8	2.9	4.3	2.9	4.7	2.9
	12.0	2.4	2.2	2.9	2.5	3.4	2.6	3.6	2.7	3.8	2.9	4.3	2.9	4.7	2.9
	14.0	2.4	2.2	2.9	2.5	3.4	2.6	3.6	2.7	3.8	2.9	4.3	2.9	4.6	2.9
	16.0	2.4	2.2	2.9	2.5	3.4	2.6	3.6	2.7	3.8	2.9	4.3	2.9	4.6	2.8
	18.0	2.4	2.2	2.9	2.5	3.4	2.6	3.6	2.7	3.8	2.9	4.3	2.9	4.5	2.8
	20.0	2.4	2.2	2.9	2.5	3.4	2.6	3.6	2.7	3.8	2.9	4.3	2.9	4.4	2.8
	21.0	2.4	2.2	2.9	2.5	3.4	2.6	3.6	2.7	3.8	2.9	4.3	2.9	4.4	2.7
	23.0	2.4	2.2	2.9	2.5	3.4	2.6	3.6	2.7	3.8	2.9	4.2	2.9	4.3	2.7
	25.0	2.4	2.2	2.9	2.5	3.4	2.6	3.6	2.7	3.8	2.9	4.2	2.8	4.3	2.7
	27.0	2.4	2.2	2.9	2.5	3.4	2.6	3.6	2.7	3.8	2.9	4.1	2.8	4.2	2.7
	29.0	2.4	2.2	2.9	2.5	3.4	2.6	3.6	2.7	3.8	2.9	4.1	2.8	4.2	2.6
	31.0	2.4	2.2	2.9	2.5	3.4	2.6	3.6	2.7	3.8	2.9	4.0	2.7	4.1	2.6
	33.0	2.4	2.2	2.9	2.5	3.4	2.6	3.6	2.7	3.8	2.9	3.9	2.7	4.0	2.6
	35.0	2.4	2.2	2.9	2.5	3.4	2.6	3.6	2.7	3.8	2.9	3.9	2.7	4.0	2.6
	37.0	2.4	2.2	2.9	2.5	3.4	2.6	3.6	2.7	3.7	2.8	3.8	2.7	3.9	2.6
	39.0	2.4	2.2	2.9	2.5	3.4	2.6	3.6	2.7	3.7	2.8	3.8	2.7	3.8	2.6
40	10.0	3.0	2.6	3.6	2.8	4.2	3.2	4.5	3.2	4.8	3.3	5.4	3.5	5.9	3.5
	12.0	3.0	2.6	3.6	2.8	4.2	3.2	4.5	3.2	4.8	3.3	5.4	3.5	5.8	3.5
	14.0	3.0	2.6	3.6	2.8	4.2	3.2	4.5	3.2	4.8	3.3	5.4	3.5	5.8	3.4
	16.0	3.0	2.6	3.6	2.8	4.2	3.2	4.5	3.2	4.8	3.3	5.4	3.5	5.7	3.4
	18.0	3.0	2.6	3.6	2.8	4.2	3.2	4.5	3.2	4.8	3.3	5.4	3.5	5.6	3.3
	20.0	3.0	2.6	3.6	2.8	4.2	3.2	4.5	3.2	4.8	3.3	5.4	3.5	5.5	3.3
	21.0	3.0	2.6	3.6	2.8	4.2	3.2	4.5	3.2	4.8	3.3	5.4	3.5	5.5	3.3
	23.0	3.0	2.6	3.6	2.8	4.2	3.2	4.5	3.2	4.8	3.3	5.3	3.4	5.4	3.2
	25.0	3.0	2.6	3.6	2.8	4.2	3.2	4.5	3.2	4.8	3.3	5.2	3.4	5.3	3.2
	27.0	3.0	2.6	3.6	2.8	4.2	3.2	4.5	3.2	4.8	3.3	5.2	3.3	5.3	3.2
	29.0	3.0	2.6	3.6	2.8	4.2	3.2	4.5	3.2	4.8	3.3	5.1	3.3	5.2	3.1
	31.0	3.0	2.6	3.6	2.8	4.2	3.2	4.5	3.2	4.8	3.3	5.0	3.2	5.1	3.1
	33.0	3.0	2.6	3.6	2.8	4.2	3.2	4.5	3.2	4.8	3.3	4.9	3.2	5.0	3.1
	35.0	3.0	2.6	3.6	2.8	4.2	3.2	4.5	3.2	4.7	3.3	4.9	3.2	5.0	3.0
	37.0	3.0	2.6	3.6	2.8	4.2	3.2	4.5	3.2	4.7	3.3	4.8	3.1	4.9	3.0
	39.0	3.0	2.6	3.6	2.8	4.2	3.2	4.5	3.2	4.6	3.2	4.7	3.1	4.8	3.0
63	10.0	4.8	4.0	5.7	4.5	6.6	5.0	7.1	5.1	7.6	5.2	8.5	5.4	9.3	5.6
	12.0	4.8	4.0	5.7	4.5	6.6	5.0	7.1	5.1	7.6	5.2	8.5	5.4	9.2	5.5
	14.0	4.8	4.0	5.7	4.5	6.6	5.0	7.1	5.1	7.6	5.2	8.5	5.4	9.1	5.4
	16.0	4.8	4.0	5.7	4.5	6.6	5.0	7.1	5.1	7.6	5.2	8.5	5.4	9.0	5.3
	18.0	4.8	4.0	5.7	4.5	6.6	5.0	7.1	5.1	7.6	5.2	8.5	5.4	8.8	5.3
	20.0	4.8	4.0	5.7	4.5	6.6	5.0	7.1	5.1	7.6	5.2	8.5	5.4	8.7	5.2
	21.0	4.8	4.0	5.7	4.5	6.6	5.0	7.1	5.1	7.6	5.2	8.5	5.4	8.7	5.2
	23.0	4.8	4.0	5.7	4.5	6.6	5.0	7.1	5.1	7.6	5.2	8.4	5.3	8.5	5.1
	25.0	4.8	4.0	5.7	4.5	6.6	5.0	7.1	5.1	7.6	5.2	8.3	5.3	8.4	5.0
	27.0	4.8	4.0	5.7	4.5	6.6	5.0	7.1	5.1	7.6	5.2	8.1	5.2	8.3	5.0
	29.0	4.8	4.0	5.7	4.5	6.6	5.0	7.1	5.1	7.6	5.2	8.0	5.1	8.2	4.9
	31.0	4.8	4.0	5.7	4.5	6.6	5.0	7.1	5.1	7.6	5.2	7.9	5.1	8.1	4.9
	33.0	4.8	4.0	5.7	4.5	6.6	5.0	7.1	5.1	7.6	5.2	7.8	5.0	7.9	4.8
	35.0	4.8	4.0	5.7	4.5	6.6	5.0	7.1	5.1	7.5	5.2	7.7	5.0	7.8	4.8
	37.0	4.8	4.0	5.7	4.5	6.6	5.0	7.1	5.1	7.4	5.1	7.5	4.9	7.7	4.8
	39.0	4.8	4.0	5.7	4.5	6.6	5.0	7.1	5.1	7.2	5.0	7.4	4.9	7.6	4.7

TC Total capacity ; kW
SC Sensible capacity ; kW

Refer to Outdoor Unit Capacity Tables : on page 411~, 470~, for the actual performance data of each indoor and outdoor unit combination.

8. Sound Levels

Overall

■ **Ceiling Mounted Cassette Corner Type**

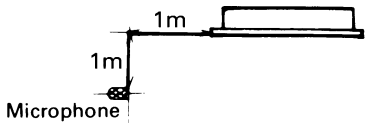

(V0473)

Note:

1. The operating conditions are assumed to be standard (JIS conditions).
2. These operating values were obtained in a dead room (conversion values).
   Sound level will vary depending on a range of factors such as the construction (acoustic absorption coefficient) of the particular room in which the equipments installed.

dBA

Model	220V, 50Hz		240V, 50Hz	
	H	L	H	L
FXKQ25MA FXKQ32MA	38	33	40	35
FXKQ40MA	40	34	42	36
FXKQ63MA	42	37	44	39

Octave Band Level

○———○ 220V 50Hz
○ - - - -○ 240V 50Hz

FXKQ25 · 32MAVE

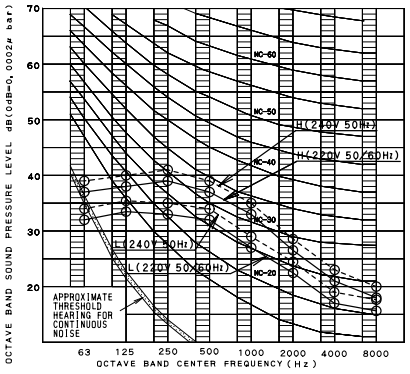

4D037071

FXKQ40MAVE

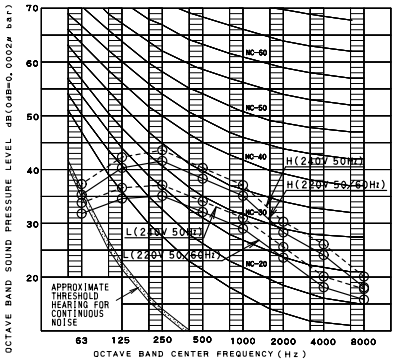

4D037072

FXKQ63MAVE

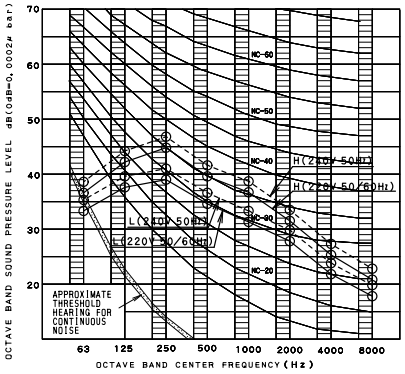

4D037073

9. Installation

Center of Gravity

Unit (mm)

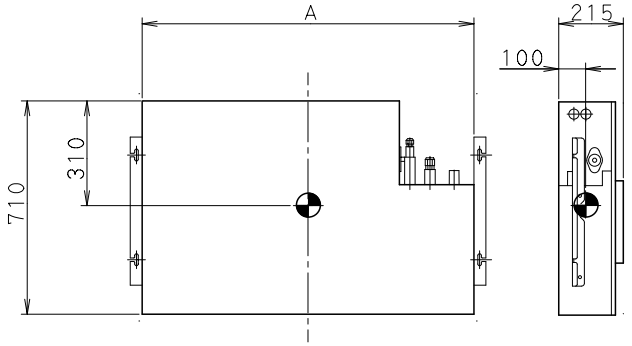

MODEL	A
FXKQ25・32・40MAVE	1110
FXKQ63MAVE	1310

C : 4D037079A

Service Space

Unit (mm)

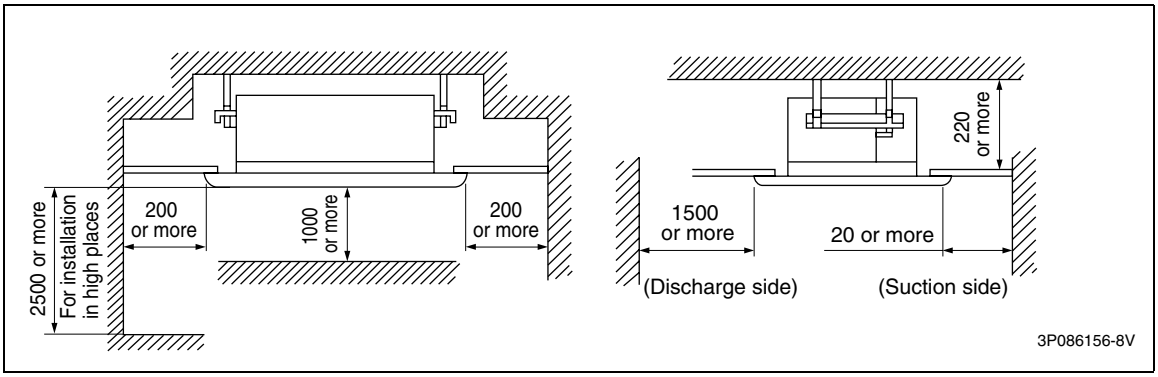

Note:
Above figure means minimum value. Please keep these value at least.

Bolt Pitch

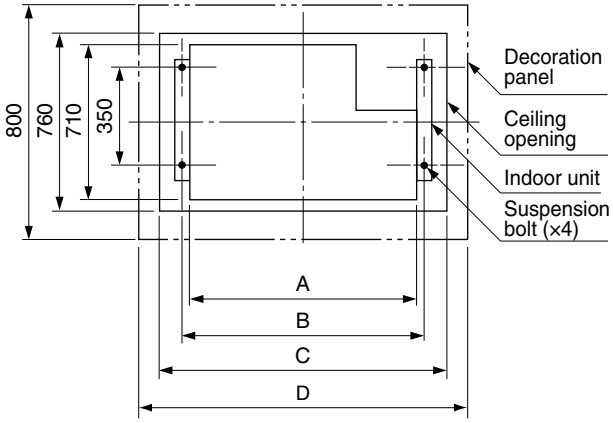

Model	A	B	C	D
FXKQ25 · 32 · 40MAVE	1110	1150	1200	1240
FXKQ63MAVE	1310	1350	1400	1440

3P086156-8V

Drain Pump Kit

Indoor unit	Drain pump kit
FXKQ-MA	Standard (Equipped with indoor unit)

Drain Piping Work

《Rig the drain pipe as shown below and take measures against condensation. Improperly rigged piping could lead to leaks and eventually wet furniture and belongings.》

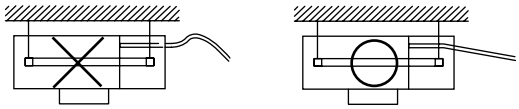

(1) Carry out the drain piping.
- Keep piping as short as possible and slope it downwards so that air may not remain trapped inside the pipe.
- The diameter of the drain pipe should be greater than or equal to the diameter of the connecting pipe (vinyl tube; pipe size : 25 mm ; outer dimension : 32 mm).
- Use the drain hose and metal clamp. Insert the drain hose into the drain socket, up to the white tape. Tighten the metal clamp until the screw head is less than 4 mm from the hose.

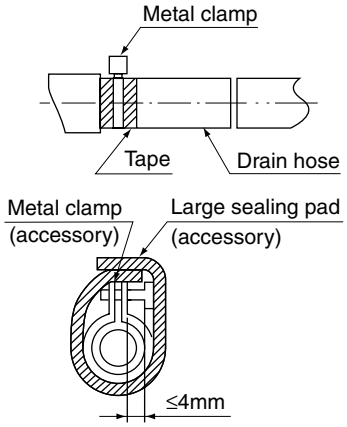

⚠ CAUTION

Setting the unit at an angle opposite to the drain piping might cause leaks.

- Wrap the sealing pad over the clamp and drain hose to insulate.
- Insulate the drain hose inside the building.
  While referring to the figure on the right, insulate the clamp and drain hose with the large sealing pad.
- If the drain hose cannot be sufficiently set on a slope, execute the drain raising piping.
- Secure a downward gradient of 1 / 100 or more for the drain pipe. To accomplish this, mount supporting brackets at an interval of 1 - 1.5 m.

〈Precautions when doing drain-up piping work.〉
- Make sure the drain-up piping is at most 330 mm high.
- Stand the drain-up piping horizontally, and make sure it is not further than 300 mm from the base of the drain socket.

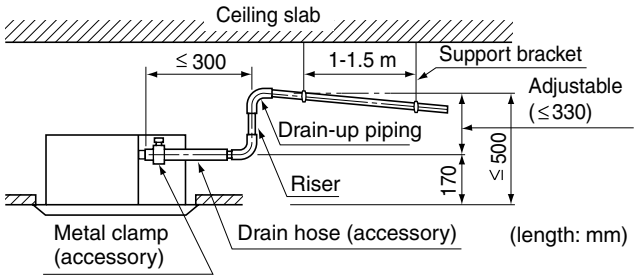

- Use the following outline if laying concentrated drain piping.
- If converging multiple drain pipes, install according to the procedure shown below.

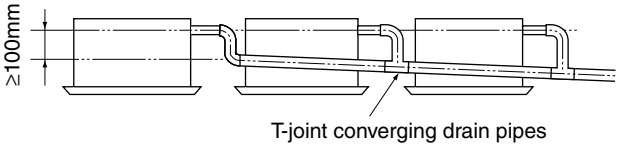

Select converging drain pipes whose gauge is suitable for the operating capacity of the unit.

3P086156-8V

(2) After piping work is finished, check drainage flows smoothly.
- Open the inspection opening, add approximately 1liter of water slowly into the drain pan and check drainage flow.

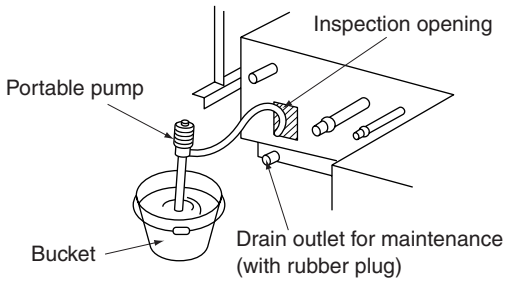

NOTE
- Use the drain outlet for maintenance to drain water from the drain pan.

WHEN ELECTRIC WIRING WORK IS FINISHED
- Check drainage flow during COOL running, explained under “TEST OPERATION”.

WHEN ELECTRIC WIRING WORK IS NOT FINISHED
- Remove the electric parts box lid, connect a power supply and remote controller to the terminals.
  (Refer to the **HOW TO CONNECT WIRINGS**)

Be sure attach the electric parts box lid before turning on the power.
Next, press the inspection/test operation button “ TEST ” on the remote controller. The unit will engage the test operation mode. Press the operation mode selector button “ ” until selecting FAN OPERATION “ ”. Then, press the ON/OFF button “ ”. The indoor unit fan and drain pump will start up. Check that the water has drained from the unit. Press “ TEST ” to go back to the first mode.

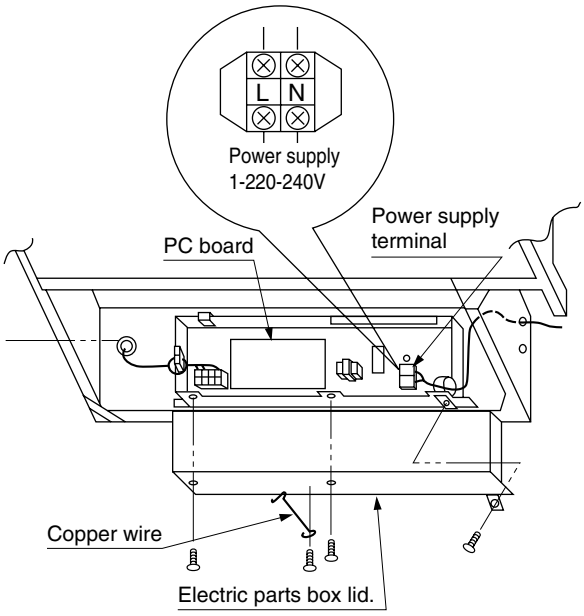

CAUTION
- Drain piping connections
  Do not connect the drain piping directly to sewage pipes that smell of ammonia. The ammonia in the sewage might enter the indoor unit through the drain pipes and corrode the heat exchanger.
- Keep in mind that it will become the cause of getting drain pipe blocked if water collects on drain pipe.

3P086156-8V

10. Accessories

Standard Accessories

FXKQ25~63MA

Name	Metal clamp	Paper pattern for installation	Drain hose	Insulation for fitting	Sealing pad	Insulation for hanger bracket
Quantity	1pc.	1 pc.	1 pc.	1 each.	1 each.	4 pcs.
Shape	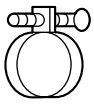	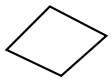 Corrugated cardboard		For gas pipe 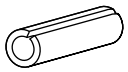 For liquid pipe 	Large 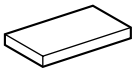 Small 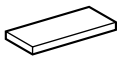	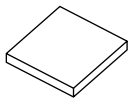

Name	Washer for hanging bracket	Clamp	Positioning jig for installation	Air outlet blocking pad	
Quantity	8 pcs.	8 pcs.	2 each.	1 pc.	
Shape			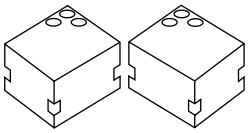 4 screws	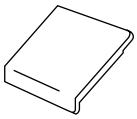	(Other) • Operation manual • Installation manual

• Screws for fixing panels are attached to decoration panel.

3P086156-8V

Optional Accessories (For Unit)

Item / Type		FXKQ25MA FXKQ32MA FXKQ40MA	FXKQ63MA
Panel related	Decoration panel	BYK45FJW1	BYK71FJW1
	Long life replacement filter	KAFJ521F56	KAFJ521F80
Air inlet and air discharge outlet related	Air discharge grill	K-HV7AW	K-HV9AW
	Air discharge blind panel	KDBJ52F56W	KDBJ52F80W
	Panel spacer	KPBJ52F56W	KPBJ52F80W
	Flexible duct (with shutter)	KFDJ52FA56	KFDJ52FA80

C : 3D037081A

Optional Accessories (For Controls) : Refer to P.561

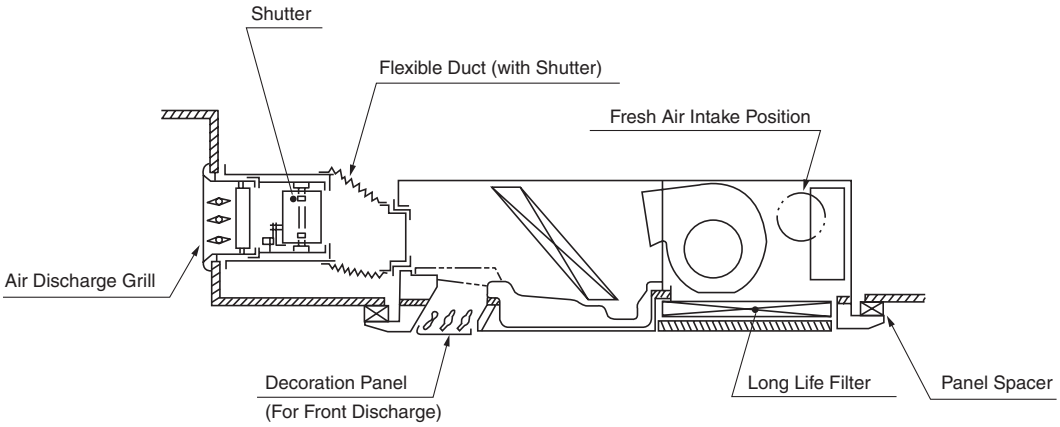

(V0678)

Panel Spacer

If the space above the ceiling is not available for more than 220 mm, use the panel spacer, which enables to install the unit in 200 mm space.

Specifications

Item / Model		KPBJ52F56W	KPBJ52F80W
Color		White	
Dimensions (mm)	Height	20	
	Width	1,240	1,440
	Depth	800	
Materials		Outer Frame : Resin Molding Thermal Insulation : Foam Polyethylene	
Contents		Panel Spacer(1)(2)(3) Thermal Insulation (1)(2), Screws	
Applicable Decoration Panel		BYK45FJW1	BYK71FJW1
Applicable Model		For Indoor Unit 25~40 Class	For Indoor Unit 63 Class

Installation

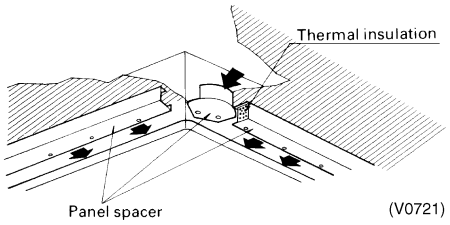

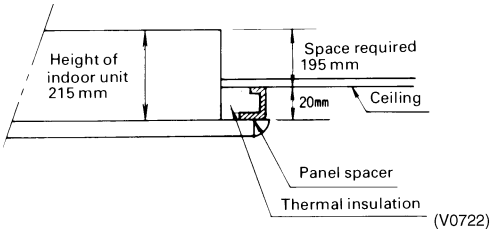

Precaution at use

1. Be sure to stick insulators on the panel spacer after the panel spacer is assembled.
2. Secure 20 cm height in the space above ceiling.

Contents of Kit

Prior to installation check whether you have the complete kit of parts as shown below including the installation manual.

Name	Panel spacer (1)	Panel spacer (2)	Panel spacer (3)	Thermal insulation (1)
Quantity	2 pieces	2 pieces	4 pieces	2 pieces
Shape				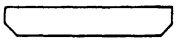

Name	Thermal insulation (2)	Screws	Installation manual
Quantity	2 pieces	18 pieces	1 piece
Shape	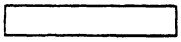	 M4×12	

(V0920)

Long Life Replacement Filter

Specifications

Items \ Model	KAFJ521F56	KAFJ521F80
Life Time, Average Efficiency	2,500 hours (dust density 0.15 mg/m³), 45% (Gravity method)	
Filter	Mildew Proof Resin Net	Mildew Proof Resin Net
Required Quantity (for One Unit)	Two pieces	Two pieces
Applicable Models	25 · 32 · 40 Class	63 Class

Dimensions

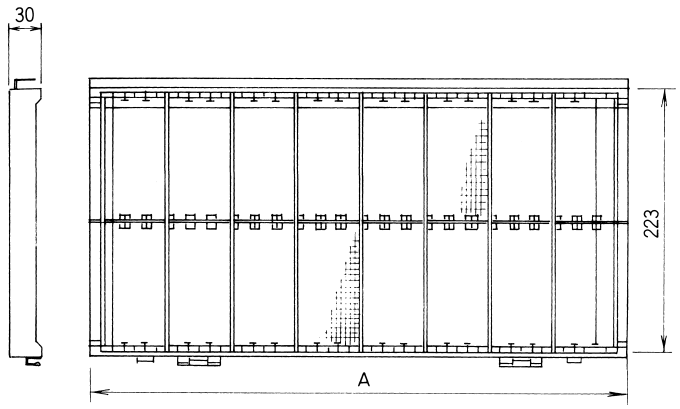

Model	A
KAFJ521F56	403
KAFJ521F80	503

JC : D3K1145A

Discharge Grille

This optional kit is used when the unit is installed with front air discharge. The direction of air can be adjusted flexibly. This discharge grille should be installed with the following flexible duct.

Specifications

Items \ Model	K-HV7AW	K-HV9AW
Air Flow Rate (m³/min)	5~12	7~17
Type	HV type (Horizontal blade and vertical blade movable)	
External Color	White	White
Materials	Steel plate (A cryptomeria only at the tip of the outlet + nylon flocking)	
Structural Parts	Discharge grille, Screws, Blade control tool	
Applicable Flexible Duct	KFDJ52F56	KFDJ52F80
Applicable Models	25 · 32 · 40 Class	63 Class

Dimension

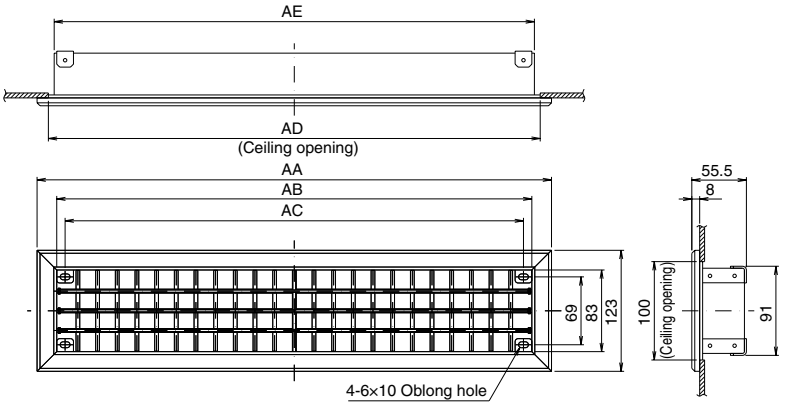

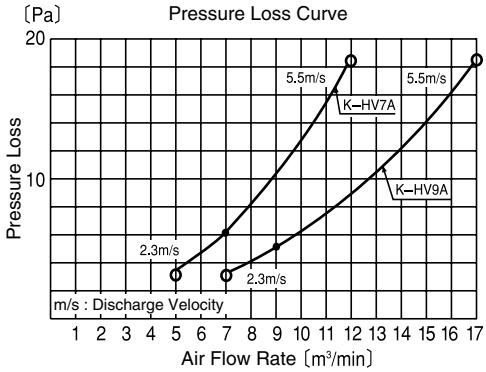

Model	AA	AB	AC	AD	AE
K–HV7AW	523	483	466	500	488
K–HV9AW	723	683	666	700	688

JC : D3K1972C

Flexible Duct (with Shutter)

The built-in shutter's Open/Shut action makes it possible to regulate the air flow rate. Besides, the flexible duct helps the connection to the main unit to give more flexibility.

Specifications

Items / Model		KFDJ52FA56	KFDJ52FA80
External Dimension (mm)	H	132	
	W	532	732
	D	Max. 353	
Materials		Outer frame : Steel plate Flexible Duct : Glass wool, Vinyl chloride sheet	
Contents		Flexible duct, Shutter, Duct's set plate, Insulator, Outlet seal pad, Set screw, Shutter Open/shut tool, Blade adjusting tool	
Applicable Models		25 · 32 · 40 Class	63 Class

Precaution at use

Be sure to seal out the opening of the drain pan with drain outlet seal materials after the front panel of the indoor unit is removed away.

Dimension

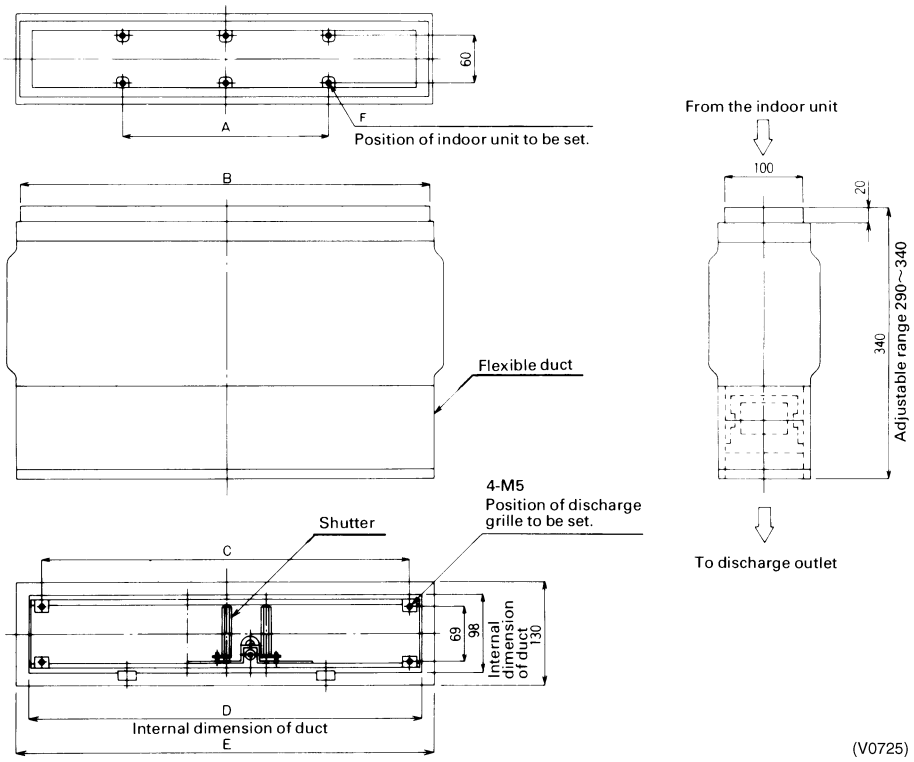

Model	Applicable Model	A	B	C	D	E	F
KFDJ52FA56	For Indoor Unit 25~40 Class	260	520	466	498	530	4-ϕ Hole
KFDJ52FA80	For Indoor Unit 63 Class	460	720	666	698	730	6-ϕ7 Hole

Installation

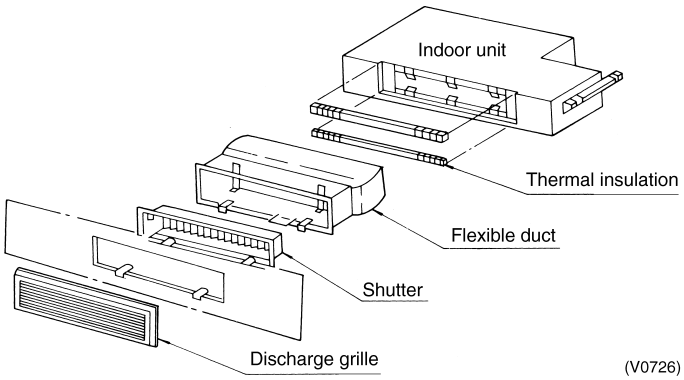

Air Discharge Blind Panel

This is the parts which closes the lower discharge outlet when the unit is used as a front discharge style.

Specifications

Items / Model		KDBJ52F56W	KDBJ52F80W
External color		White	White
External Dimension (mm)	T	18	
	W	1,126	1,326
	D	119	
Materials		Steel plate	
Contents		Outlet decoration panel assembly, Decoration panel suspension plate, Name Plate, Caution plate set board	
Applied Decoration Panel		BYK45FJW1	BYK71FJW1
Applicable Models		25 · 32 · 40 Class	63 Class

External dimension

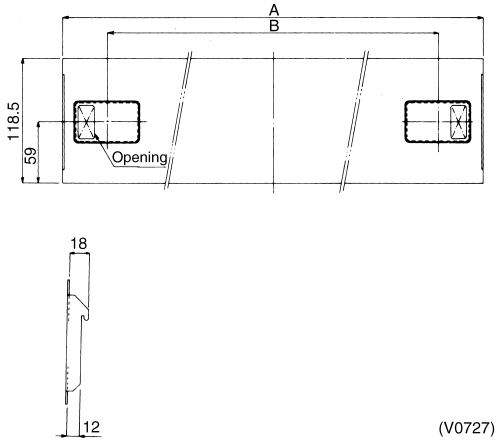

Model	A	B
KDBJ52F56	1125.5	1040
KDBJ52F80	1325.5	1240

Dimensions with the Optional Accessories

Panel Spacer

■ **FXKQ25~40MA**

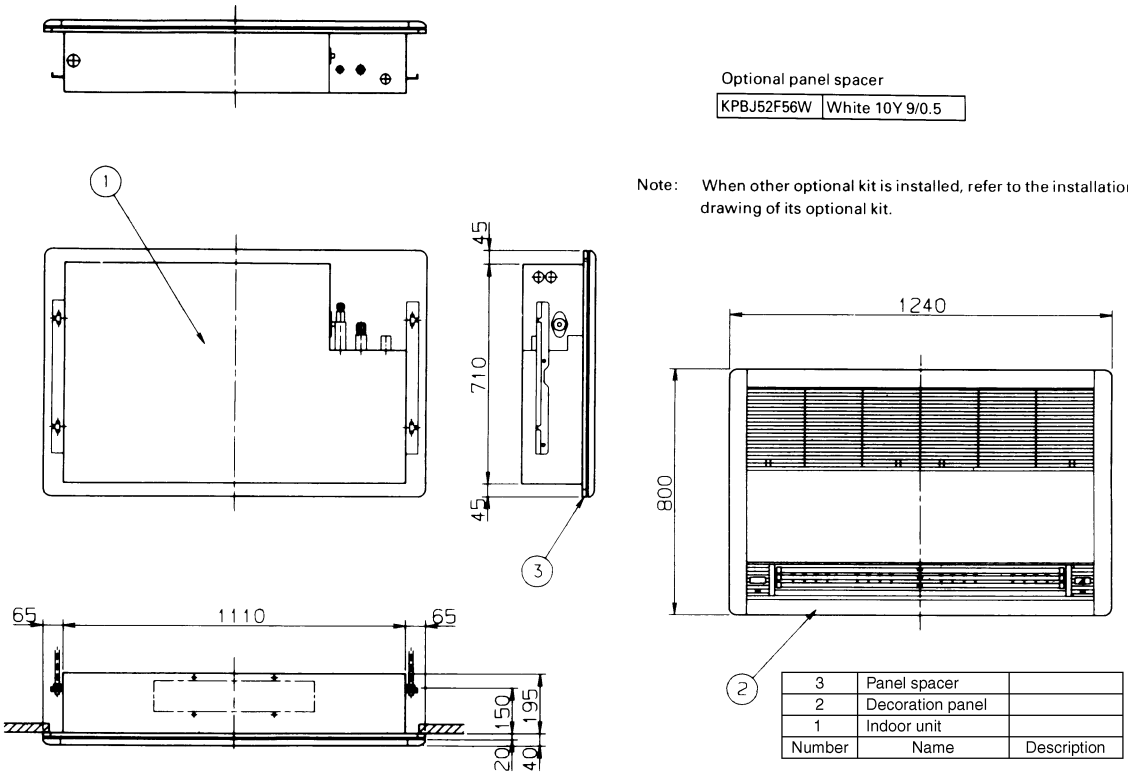

Optional panel spacer

KPBJ52F56W	White 10Y 9/0.5

Note: When other optional kit is installed, refer to the installation drawing of its optional kit.

Number	Name	Description
3	Panel spacer	
2	Decoration panel	
1	Indoor unit	

JC : DU825-219A

■ **FXKQ63MA**

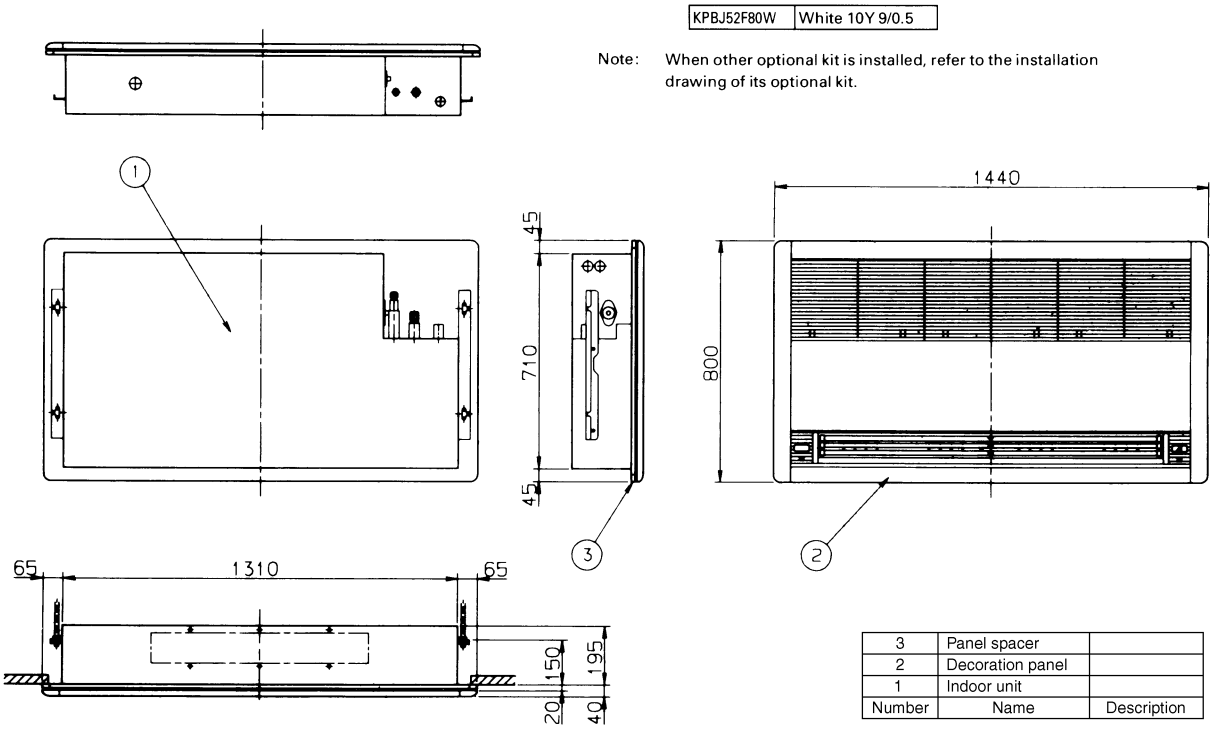

·Optional panel spacer

KPBJ52F80W	White 10Y 9/0.5

Note: When other optional kit is installed, refer to the installation drawing of its optional kit.

Number	Name	Description
3	Panel spacer	
2	Decoration panel	
1	Indoor unit	

JC : DU827-242A

FXDQ-P, FXDQ-N(A)
Slim Ceiling Mounted Duct Type

1. Features 132
   1.1 FXDQ-P 132
   1.2 FXDQ-N(A) 133
2. Specifications 134
   2.1 FXDQ-P 134
   2.2 FXDQ-N(A) 135
3. Dimensions 139
   3.1 FXDQ-P 139
   3.2 FXDQ-N(A) 141
4. Piping Diagrams 145
   4.1 FXDQ-P 145
   4.2 FXDQ-N(A) 146
5. Wiring Diagrams 147
   5.1 FXDQ-P 147
   5.2 FXDQ-N(A) 149
6. Electric Characteristics 151
   6.1 FXDQ-P 151
   6.2 FXDQ-N(A) 152
7. Capacity Tables 153
   7.1 FXDQ-P 153
   7.2 FXDQ-N(A) 154
8. Fan Performances 155
   8.1 FXDQ-P 155
   8.2 FXDQ-N(A) 156
9. Sound Levels 158
   9.1 FXDQ-P 158
   9.2 FXDQ-N(A) 159
10. Installation 160
   10.1 FXDQ-P 160
   10.2 FXDQ-N(A) 161
11. Accessories 170

1. Features

1.1 FXDQ-P

Slim design, quietness and static pressure switching

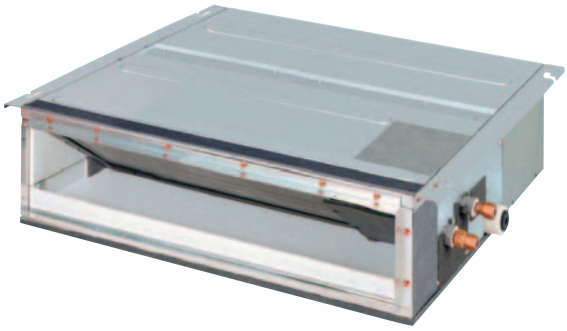

The best to use in drop-ceilings!

FXDQ20P/ FXDQ25P/ FXDQ32P

- Only 700 mm in width and 23 kg in weight, this model is optimum to install in limited spaces like drop-ceilings in hotels.

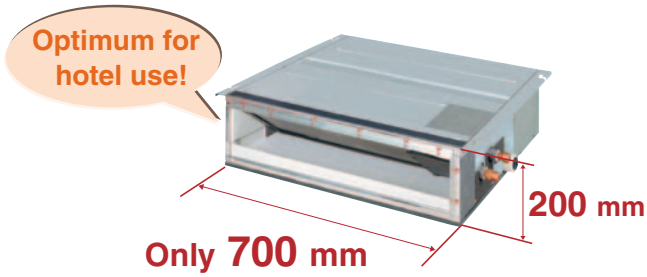

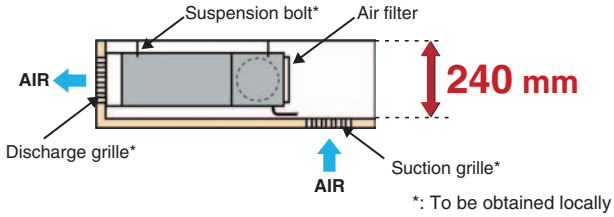

*: To be obtained locally

- External static pressure selectable by remote controller switching make this indoor unit a very comfortable and flexible model.
  10 Pa-30 Pa/factory set: 10 Pa for FXDQ-P models.

- FXDQ-P models are available in two types depending on installation conditions.
  FXDQ-PVE: with a drain-up pump (750 mm lift) as a standard accessory
  FXDQ-PVET: without a drain-up pump

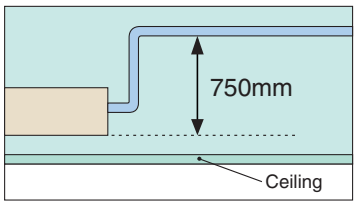

- Low operating sound (dB(A))

Class	20	25	32
Operating sound (H/L)	33/29	33/29	33/29

*The values of operation sound level represent those for rear-suction operation. Sound level values for bottom-suction operation can be obtained by adding 5 dB.
*Values are based on the following conditions:
FXDQ-P: external static pressure of 10 Pa

1.2 FXDQ-N(A)

FXDQ20N(A)/FXDQ25N(A)/FXDQ32N(A)
FXDQ40N(A)/FXDQ50N(A)/FXDQ63N(A)

5

Slim design, quietness and static pressure switching

- Only 200 mm in height, this new model can be installed in rooms with as little as 240 mm depth between the drop ceiling and ceiling slab.

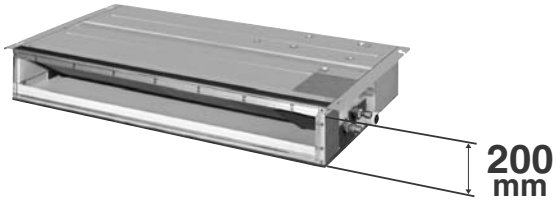

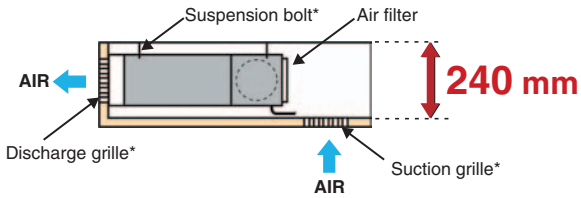

*: To be obtained locally

- Low operating sound

(dB(A))

Class	20	25	32	40	50	63
Operating sound (H/L)	33/29	33/29	33/29	34/30	35/31	36/32

(When 15Pa)

*The values of operation sound level represent those for rear-suction operation. Sound level values for bottom-suction operation can be obtained by adding 5 dB.

- External static pressure selectable by remote controller (15Pa-44Pa / factory set : 15Pa) switching make this indoor unit a very comfortable and flexible model.

- FXDQ-N models are available in two types depending on installation conditions.

FXDQ-NAVE: with a drain-up pump (750 mm lift) as a standard accessory
FXDQ-NVET: without a drain-up pump

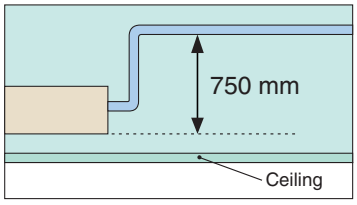

2. Specifications

2.1 FXDQ-P

Slim Ceiling Mounted Duct Type (VE: with Drain Pump, VET without Drain Pump)

Model			FXDQ20PVE (T)	FXDQ25PVE (T)	FXDQ32PVE (T)
★1 Cooling Capacity (19.5°CWB)		kcal/h	2,000	2,500	3,200
		Btu/h	7,800	9,900	12,600
		kW	2.3	2.9	3.7
★2 Cooling Capacity (19.0°CWB)		kW	2.2	2.8	3.6
Casing			Galvanized Steel Plate	Galvanized Steel Plate	Galvanized Steel Plate
Dimensions: (H×W×D)		mm	200×700×620	200×700×620	200×700×620
Coil (Cross Fin Coil)	Rows×Stages×Fin Pitch	mm	2×12×1.5	2×12×1.5	3×12×1.5
	Face Area	m²	0.126	0.126	0.126
Fan	Model		—	—	—
	Type		Sirocco Fan	Sirocco Fan	Sirocco Fan
	Motor Output × Number of Units	W	62×1	62×1	62×1
	Air Flow Rate (H/L)	m³/min	8.0/6.4	8.0/6.4	8.0/6.4
	External Static Pressure	Pa	30-10 ★4	30-10 ★4	30-10 ★4
	Drive		Direct Drive	Direct Drive	Direct Drive
Temperature Control			Microprocessor Thermostat for Cooling and Heating	Microprocessor Thermostat for Cooling and Heating	Microprocessor Thermostat for Cooling and Heating
Sound Absorbing Thermal Insulation Material			Foamed Polyethylene	Foamed Polyethylene	Foamed Polyethylene
Air Filter			Removal / Washable / Mildew Proof	Removal / Washable / Mildew Proof	Removal / Washable / Mildew Proof
Piping Connections	Liquid Pipes	mm	ϕ6.4 (Flare Connection)	ϕ6.4 (Flare Connection)	ϕ6.4 (Flare Connection)
	Gas Pipes	mm	ϕ12.7 (Flare Connection)	ϕ12.7 (Flare Connection)	ϕ12.7 (Flare Connection)
	Drain Pipe	mm	VP20 (External Dia. 26 Internal Dia. 20)	VP20 (External Dia. 26 Internal Dia. 20)	VP20 (External Dia. 26 Internal Dia. 20)
Machine Weight (Mass)		kg	23	23	23
★5 Sound Level (H/L)		dBA	33/29	33/29	33/29
Safety Devices			Fuse, Thermal Protector for Fan Motor	Fuse, Thermal Protector for Fan Motor	Fuse, Thermal Protector for Fan Motor
Refrigerant Control			Electronic Expansion Valve	Electronic Expansion Valve	Electronic Expansion Valve
Standard Accessories			Operation Manual, Installation Manual, Drain Hose, Sealing Pads, Clamps, Washers, Insulation for Fitting, Clamp Metal, Washer Fixing Plate, Screws for Duct Flanges, Air Filter	Operation Manual, Installation Manual, Drain Hose, Sealing Pads, Clamps, Washers, Insulation for Fitting, Clamp Metal, Washer Fixing Plate, Screws for Duct Flanges, Air Filter	Operation Manual, Installation Manual, Drain Hose, Sealing Pads, Clamps, Washers, Insulation for Fitting, Clamp Metal, Washer Fixing Plate, Screws for Duct Flanges, Air Filter
Drawing No.			C:3D052136		

Notes:

★1 Indoor temp. : 27°CDB, 19.5°CWB / outdoor temp; 35°CDB / Equivalent piping length: 7.5m, level difference: 0m.
★2 Indoor temp. : 27°CDB, 19.0°CWB / outdoor temp; 35°CDB / Equivalent piping length: 7.5m, level difference: 0m.
3 Capacities are net, including a deduction for cooling (an addition for heating) for indoor fan motor heat.
★4 External static pressure is changeable to set by the remote controller this pressure means “High static pressure - Standard static pressure”.
★5 The operation sound levels are the conversion values in anechoic chamber. In practice, the sound tend to be larger than the specified values due to ambient noise or reflections.
When the place of suction is changed to the bottom suction, the sound level will increase by approx. 5dBA.
6 Refer to page 151 for Fan Motor Input.

Conversion Formulae
kcal/h=kW×860 Btu/h=kW×3412 cfm=m³/min×35.3

2.2 FXDQ-N(A)

Slim Ceiling Mounted Duct Type (with Drain Pump)

Model			FXDQ20NAVE	FXDQ25NAVE	FXDQ32NAVE
★1 Cooling Capacity (19.5°CWB)		kcal/h	2,000	2,500	3,200
		Btu/h	7,800	9,900	12,600
		kW	2.3	2.9	3.7
★2 Cooling Capacity (19.0°CWB)		kW	2.2	2.8	3.6
Casing			Galvanized Steel Plate	Galvanized Steel Plate	Galvanized Steel Plate
Dimensions: (H×W×D)		mm	200×900×620	200×900×620	200×900×620
Coil (Cross Fin Coil)	Rows×Stages×Fin Pitch	mm	2×12×1.5	2×12×1.5	2×12×1.5
	Face Area	m²	0.176	0.176	0.176
Fan	Model		—	—	—
	Type		Sirocco Fan	Sirocco Fan	Sirocco Fan
	Motor Output × Number of Units	W	62×1	62×1	62×1
	Air Flow Rate (H/L)	m³/min	9.5/7.5	9.5/7.5	10.5/8.5
	External Static Pressure	Pa	44-15 ★4	44-15 ★4	44-15 ★4
	Drive		Direct Drive	Direct Drive	Direct Drive
Temperature Control			Microprocessor Thermostat for Cooling and Heating	Microprocessor Thermostat for Cooling and Heating	Microprocessor Thermostat for Cooling and Heating
Sound Absorbing Thermal Insulation Material			Foamed Polyethylene	Foamed Polyethylene	Foamed Polyethylene
Air Filter			Removal / Washable / Mildew Proof	Removal / Washable / Mildew Proof	Removal / Washable / Mildew Proof
Piping Connections	Liquid Pipes	mm	ϕ6.4 (Flare Connection)	ϕ6.4 (Flare Connection)	ϕ6.4 (Flare Connection)
	Gas Pipes	mm	ϕ12.7 (Flare Connection)	ϕ12.7 (Flare Connection)	ϕ12.7 (Flare Connection)
	Drain Pipe	mm	VP20 (External Dia. 26 Internal Dia. 20)	VP20 (External Dia. 26 Internal Dia. 20)	VP20 (External Dia. 26 Internal Dia. 20)
Machine Weight (Mass)		kg	26	26	26
★5 Sound Level (H/L)		dBA	33/29	33/29	33/29
Safety Devices			Fuse, Thermal Protector for Fan Motor	Fuse, Thermal Protector for Fan Motor	Fuse, Thermal Protector for Fan Motor
Refrigerant Control			Electronic Expansion Valve	Electronic Expansion Valve	Electronic Expansion Valve
Standard Accessories			Operation Manual, Installation Manual, Warranty, Drain Hose, Sealing Pads, Clamps, Washers, Insulation for Fitting, Clamp Metal, Washer Fixing Plate, Screws for Duct Flanges, Air Filter	Operation Manual, Installation Manual, Warranty, Drain Hose, Sealing Pads, Clamps, Washers, Insulation for Fitting, Clamp Metal, Washer Fixing Plate, Screws for Duct Flanges, Air Filter	Operation Manual, Installation Manual, Warranty, Drain Hose, Sealing Pads, Clamps, Washers, Insulation for Fitting, Clamp Metal, Washer Fixing Plate, Screws for Duct Flanges, Air Filter
Drawing No.			C : 3D045744		

Notes:

★1 Indoor temp. : 27°CDB, 19.5°CWB / outdoor temp; 35°CDB / Equivalent piping length: 7.5m, level difference: 0m.
★2 Indoor temp. : 27°CDB, 19.0°CWB / outdoor temp; 35°CDB / Equivalent piping length: 7.5m, level difference: 0m.
3 Capacities are net, including a deduction for cooling (an addition for heating) for indoor fan motor heat.
★4 External static pressure is changeable to set by the remote controller this pressure means “High static pressure - Standard static pressure”.
★5 The operation sound levels are the conversion values in anechoic chamber. In practice, the sound tend to be larger than the specified values due to ambient noise or reflections.
When the place of suction is changed to the bottom suction, the sound level will increase by approx. 5dBA.
6 Refer to page 152 for Fan Motor Input.

Conversion Formulae
kcal/h=kW×860 Btu/h=kW×3412 cfm=m³/min×35.3

Slim Ceiling Mounted Duct Type (with Drain Pump)

Model			FXDQ40NAVE	FXDQ50NAVE	FXDQ63NAVE
★1 Cooling Capacity (19.5°CWB)		kcal/h	4,000	5,000	6,300
		Btu/h	16,000	19,800	24,900
		kW	4.7	5.8	7.3
★2 Cooling Capacity (19.0°CWB)		kW	4.5	5.6	7.1
Casing Color			Galvanized Steel Plate	Galvanized Steel Plate	Galvanized Steel Plate
Dimensions: (H×W×D)		mm	200×900×620	200×900×620	200×1100×620
Coil (Cross Fin Coil)	Rows×Stages×Fin Pitch	mm	3×12×1.5	3×12×1.5	3×12×1.5
	Face Area	m²	0.176	0.176	0.227
Fan	Model		—	—	—
	Type		Sirocco Fan	Sirocco Fan	Sirocco Fan
	Motor Output × Number of Units	W	62×1	130×1	130×1
	Air Flow Rate (H/L)	m³/min	10.5/8.5	12.5/10.0	16.5/13.0
	External Static Pressure	Pa	44-15 ★4	44-15 ★4	44-15 ★4
	Drive		Direct Drive	Direct Drive	Direct Drive
Temperature Control			Microprocessor Thermostat for Cooling and Heating	Microprocessor Thermostat for Cooling and Heating	Microprocessor Thermostat for Cooling and Heating
Sound Absorbing Thermal Insulation Material			Foamed Polyethylene	Foamed Polyethylene	Foamed Polyethylene
Air Filter			Removal / Washable / Mildew Proof	Removal / Washable / Mildew Proof	Removal / Washable / Mildew Proof
Piping Connections	Liquid Pipes	mm	ϕ6.4 (Flare Connection)	ϕ6.4 (Flare Connection)	ϕ9.5 (Flare Connection)
	Gas Pipes	mm	ϕ12.7 (Flare Connection)	ϕ12.7 (Flare Connection)	ϕ15.9 (Flare Connection)
	Drain Pipe	mm	VP20 (External Dia. 26 Internal Dia. 20)	VP20 (External Dia. 26 Internal Dia. 20)	VP20 (External Dia. 26 Internal Dia. 20)
Machine Weight (Mass)		kg	27	28	31
★5 Sound Level (H/L)		dBA	34/30	35/31	36/32
Safety Devices			Fuse, Thermal Protector for Fan Motor	Fuse, Thermal Protector for Fan Motor	Fuse, Thermal Protector for Fan Motor
Refrigerant Control			Electronic Expansion Valve	Electronic Expansion Valve	Electronic Expansion Valve
Standard Accessories			Operation Manual, Installation Manual, Warranty, Drain Hose, Sealing Pads, Clamps, Washers, Insulation for Fitting, Clamp Metal, Washer Fixing Plate, Screws for Duct Flanges, Air Filter	Operation Manual, Installation Manual, Warranty, Drain Hose, Sealing Pads, Clamps, Washers, Insulation for Fitting, Clamp Metal, Washer Fixing Plate, Screws for Duct Flanges, Air Filter	Operation Manual, Installation Manual, Warranty, Drain Hose, Sealing Pads, Clamps, Washers, Insulation for Fitting, Clamp Metal, Washer Fixing Plate, Screws for Duct Flanges, Air Filter
Drawing No.			C : 3D045744		

Notes:

★1 Indoor temp. : 27°CDB, 19.5°CWB / outdoor temp; 35°CDB / Equivalent piping length: 7.5m, level difference: 0m.
★2 Indoor temp. : 27°CDB, 19.0°CWB / outdoor temp; 35°CDB / Equivalent piping length: 7.5m, level difference: 0m.
3 Capacities are net, including a deduction for cooling (an addition for heating) for indoor fan motor heat.
★4 External static pressure is changeable to set by the remote controller this pressure means “High static pressure - Standard static pressure”.
★5 The operation sound levels are the conversion values in anechoic chamber. In practice, the sound tend to be larger than the specified values due to ambient noise or reflections.
When the place of suction is changed to the bottom suction, the sound level will increase by approx. 5dBA.
6 Refer to page 152 for Fan Motor Input.

Conversion Formulae
kcal/h=kW×860 Btu/h=kW×3412 cfm=m³/min×35.3

Slim Ceiling Mounted Duct Type (without Drain Pump)

Model			FXDQ20NVET	FXDQ25NVET	FXDQ32NVET
★1 Cooling Capacity (19.5°CWB)		kcal/h	2,000	2,500	3,200
		Btu/h	7,800	9,900	12,600
		kW	2.3	2.9	3.7
★2 Cooling Capacity (19.0°CWB)		kW	2.2	2.8	3.6
Casing			Galvanized Steel Plate	Galvanized Steel Plate	Galvanized Steel Plate
Dimensions: (H×W×D)		mm	200×900×620	200×900×620	200×900×620
Coil (Cross Fin Coil)	Rows×Stages×Fin Pitch	mm	2×12×1.5	2×12×1.5	2×12×1.5
	Face Area	m²	0.176	0.176	0.176
Fan	Model		—	—	—
	Type		Sirocco Fan	Sirocco Fan	Sirocco Fan
	Motor Output × Number of Units	W	62×1	62×1	62×1
	Air Flow Rate (H/L)	m³/min	9.5/7.5	9.5/7.5	10.5/8.5
	External Static Pressure	Pa	44-15 ★4	44-15 ★4	44-15 ★4
	Drive		Direct Drive	Direct Drive	Direct Drive
Temperature Control			Microprocessor Thermostat for Cooling and Heating	Microprocessor Thermostat for Cooling and Heating	Microprocessor Thermostat for Cooling and Heating
Sound Absorbing Thermal Insulation Material			Foamed Polyethylene	Foamed Polyethylene	Foamed Polyethylene
Air Filter			Removal / Washable / Mildew Proof	Removal / Washable / Mildew Proof	Removal / Washable / Mildew Proof
Piping Connections	Liquid Pipes	mm	ϕ6.4 (Flare Connection)	ϕ6.4 (Flare Connection)	ϕ6.4 (Flare Connection)
	Gas Pipes	mm	ϕ12.7 (Flare Connection)	ϕ12.7 (Flare Connection)	ϕ12.7 (Flare Connection)
	Drain Pipe	mm	VP20 (External Dia. 26 Internal Dia. 20)	VP20 (External Dia. 26 Internal Dia. 20)	VP20 (External Dia. 26 Internal Dia. 20)
Machine Weight (Mass)		kg	26	26	26
★5 Sound Level (H/L)		dBA	33/29	33/29	33/29
Safety Devices			Fuse, Thermal Protector for Fan Motor	Fuse, Thermal Protector for Fan Motor	Fuse, Thermal Protector for Fan Motor
Refrigerant Control			Electronic Expansion Valve	Electronic Expansion Valve	Electronic Expansion Valve
Standard Accessories			Operation Manual, Installation Manual, Drain Hose, Sealing Pads, Clamps, Washers, Insulation for Fitting, Clamp Metal, Washer Fixing Plate, Screws for Duct Flanges, Air Filter	Operation Manual, Installation Manual, Drain Hose, Sealing Pads, Clamps, Washers, Insulation for Fitting, Clamp Metal, Washer Fixing Plate, Screws for Duct Flanges, Air Filter	Operation Manual, Installation Manual, Drain Hose, Sealing Pads, Clamps, Washers, Insulation for Fitting, Clamp Metal, Washer Fixing Plate, Screws for Duct Flanges, Air Filter
Drawing No.			C : 3D049693		

Notes:

★1 Indoor temp. : 27°CDB, 19.5°CWB / outdoor temp; 35°CDB / Equivalent piping length: 7.5m, level difference: 0m.
★2 Indoor temp. : 27°CDB, 19.0°CWB / outdoor temp; 35°CDB / Equivalent piping length: 7.5m, level difference: 0m.
3 Capacities are net, including a deduction for cooling (an addition for heating) for indoor fan motor heat.
★4 External static pressure is changeable to set by the remote controller this pressure means “High static pressure - Standard static pressure”.
★5 The operation sound levels are the conversion values in anechoic chamber. In practice, the sound tend to be larger than the specified values due to ambient noise or reflections.
When the place of suction is changed to the bottom suction, the sound level will increase by approx. 5dBA.
6 Refer to page 152 for Fan Motor Input.

Conversion Formulae
kcal/h=kW×860 Btu/h=kW×3412 cfm=m³/min×35.3

5

Slim Ceiling Mounted Duct Type (without Drain Pump)

Model			FXDQ40NVET	FXDQ50NVET	FXDQ63NVET
★1 Cooling Capacity (19.5°CWB)		kcal/h	4,000	5,000	6,300
		Btu/h	16,000	19,800	24,900
		kW	4.7	5.8	7.3
★2 Cooling Capacity (19.0°CWB)		kW	4.5	5.6	7.1
Casing Color			Galvanized Steel Plate	Galvanized Steel Plate	Galvanized Steel Plate
Dimensions: (H×W×D)		mm	200×900×620	200×900×620	200×1100×620
Coil (Cross Fin Coil)	Rows×Stages×Fin Pitch	mm	3×12×1.5	3×12×1.5	3×12×1.5
	Face Area	m²	0.176	0.176	0.227
Fan	Model		—	—	—
	Type		Sirocco Fan	Sirocco Fan	Sirocco Fan
	Motor Output × Number of Units	W	62×1	130×1	130×1
	Air Flow Rate (H/L)	m³/min	10.5/8.5	12.5/10.0	16.5/13.0
	External Static Pressure	Pa	44-15 ★4	44-15 ★4	44-15 ★4
	Drive		Direct Drive	Direct Drive	Direct Drive
Temperature Control			Microprocessor Thermostat for Cooling and Heating	Microprocessor Thermostat for Cooling and Heating	Microprocessor Thermostat for Cooling and Heating
Sound Absorbing Thermal Insulation Material			Foamed Polyethylene	Foamed Polyethylene	Foamed Polyethylene
Air Filter			Removal / Washable / Mildew Proof	Removal / Washable / Mildew Proof	Removal / Washable / Mildew Proof
Piping Connections	Liquid Pipes	mm	ϕ6.4 (Flare Connection)	ϕ6.4 (Flare Connection)	ϕ9.5 (Flare Connection)
	Gas Pipes	mm	ϕ12.7 (Flare Connection)	ϕ12.7 (Flare Connection)	ϕ15.9 (Flare Connection)
	Drain Pipe	mm	VP20 (External Dia. 26 Internal Dia. 20)	VP20 (External Dia. 26 Internal Dia. 20)	VP20 (External Dia. 26 Internal Dia. 20)
Machine Weight (Mass)		kg	27	28	31
★5 Sound Level (H/L)		dBA	34/30	35/31	36/32
Safety Devices			Fuse, Thermal Protector for Fan Motor	Fuse, Thermal Protector for Fan Motor	Fuse, Thermal Protector for Fan Motor
Refrigerant Control			Electronic Expansion Valve	Electronic Expansion Valve	Electronic Expansion Valve
Standard Accessories			Operation Manual, Installation Manual, Drain Hose, Sealing Pads, Clamps, Washers, Insulation for Fitting, Clamp Metal, Washer Fixing Plate, Screws for Duct Flanges, Air Filter	Operation Manual, Installation Manual, Drain Hose, Sealing Pads, Clamps, Washers, Insulation for Fitting, Clamp Metal, Washer Fixing Plate, Screws for Duct Flanges, Air Filter	Operation Manual, Installation Manual, Drain Hose, Sealing Pads, Clamps, Washers, Insulation for Fitting, Clamp Metal, Washer Fixing Plate, Screws for Duct Flanges, Air Filter
Drawing No.			C : 3D049693		

Notes:

★1 Indoor temp. : 27°CDB, 19.5°CWB / outdoor temp; 35°CDB / Equivalent piping length: 7.5m, level difference: 0m.
★2 Indoor temp. : 27°CDB, 19.0°CWB / outdoor temp; 35°CDB / Equivalent piping length: 7.5m, level difference: 0m.
3 Capacities are net, including a deduction for cooling (an addition for heating) for indoor fan motor heat.
★4 External static pressure is changeable to set by the remote controller this pressure means “High static pressure - Standard static pressure”.
★5 The operation sound levels are the conversion values in anechoic chamber. In practice, the sound tend to be larger than the specified values due to ambient noise or reflections.
When the place of suction is changed to the bottom suction, the sound level will increase by approx. 5dBA.
6 Refer to page 152 for Fan Motor Input.

Conversion Formulae
kcal/h=kW×860 Btu/h=kW×3412 cfm=m³/min×35.3

3. Dimensions

3.1 FXDQ-P

FXDQ20P / 25P / 32PVE (with Drain Pump)

Unit (mm)

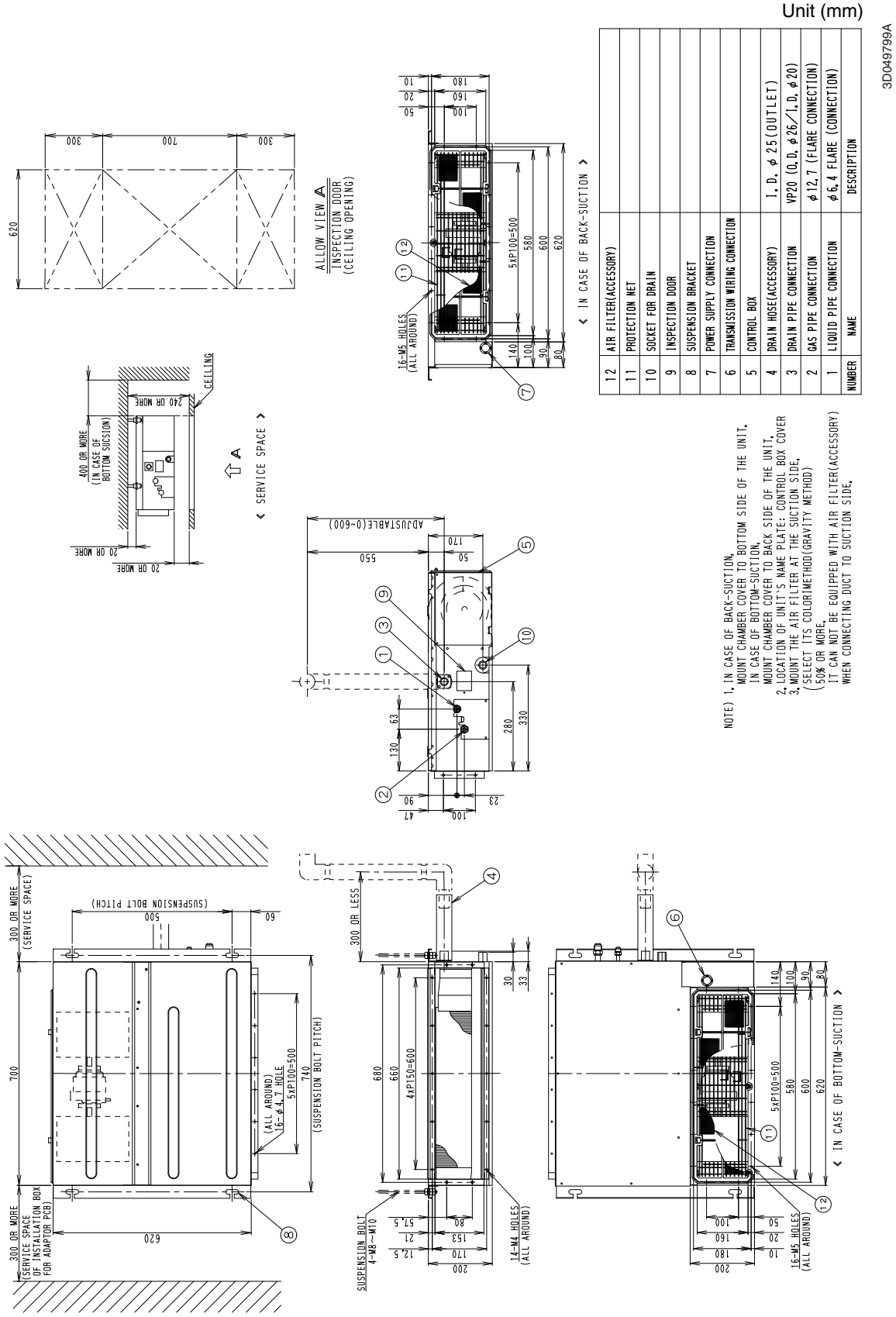

NUMBER	NAME	DESCRIPTION
12	AIR FILTER(ACCESSORY)	
11	PROTECTION NET	
10	SOCKET FOR DRAIN	
9	INSPECTION DOOR	
8	SUSPENSION BRACKET	
7	POWER SUPPLY CONNECTION	
6	TRANSMISSION WIRING CONNECTION	
5	CONTROL BOX	
4	DRAIN HOSE(ACCESSORY)	I. D. φ25(OUTLET)
3	DRAIN PIPE CONNECTION	VP20 (O.D. φ26/I.D. φ20)
2	GAS PIPE CONNECTION	φ12.7 (FLARE CONNECTION)
1	LIQUID PIPE CONNECTION	φ6.4 FLARE (CONNECTION)

NOTE) 1. IN CASE OF BACK-SUCTION,
MOUNT CHAMBER COVER TO BOTTOM SIDE OF THE UNIT.
IN CASE OF BOTTOM-SUCTION,
MOUNT CHAMBER COVER TO BACK SIDE OF THE UNIT.
2. LOCATION OF UNIT'S NAME PLATE: CONTROL BOX COVER
3. MOUNT THE AIR FILTER AT THE SUCTION SIDE.
(SELECT ITS COLORIMETHOD(GRAVITY METHOD)
50% OR MORE.
IT CAN NOT BE EQUIPPED WITH AIR FILTER(ACCESSORY)
WHEN CONNECTING DUCT TO SUCTION SIDE.

FXDQ20P / 25P / 32PVET (without Drain Pump)

Unit (mm)

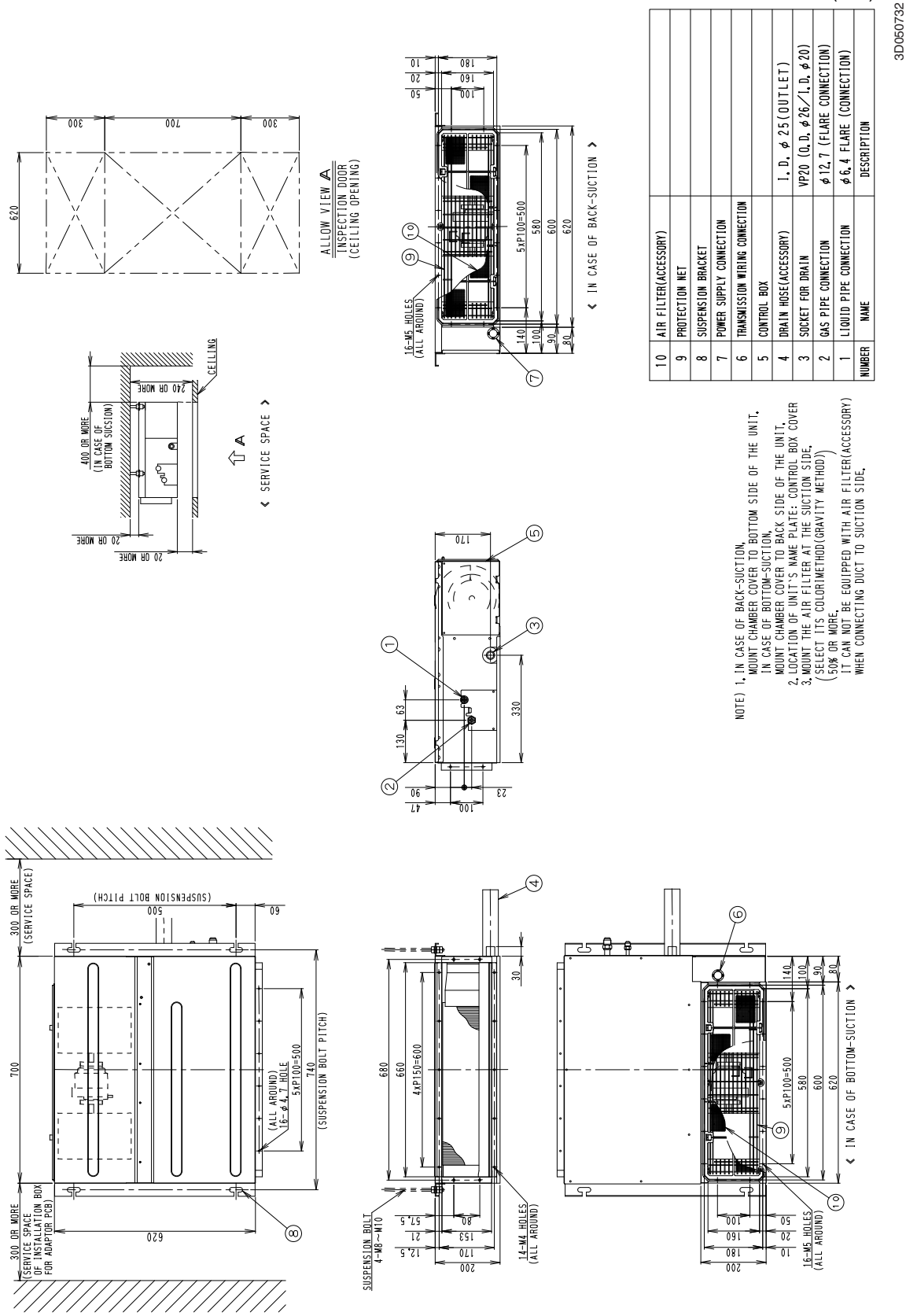

NUMBER	NAME	DESCRIPTION
10	AIR FILTER(ACCESSORY)	
9	PROTECTION NET	
8	SUSPENSION BRACKET	
7	POWER SUPPLY CONNECTION	
6	TRANSMISSION WIRING CONNECTION	
5	CONTROL BOX	
4	DRAIN HOSE(ACCESSORY)	I. D. φ25(OUTLET)
3	SOCKET FOR DRAIN	VP20 (O.D. φ26/I.D. φ20)
2	GAS PIPE CONNECTION	φ12.7 (FLARE CONNECTION)
1	LIQUID PIPE CONNECTION	φ6.4 FLARE (CONNECTION)

3.2 FXDQ-N(A)

FXDQ20NA / 25NA / 32NA / 40NA / 50NAVE (with Drain Pump)

Unit (mm)

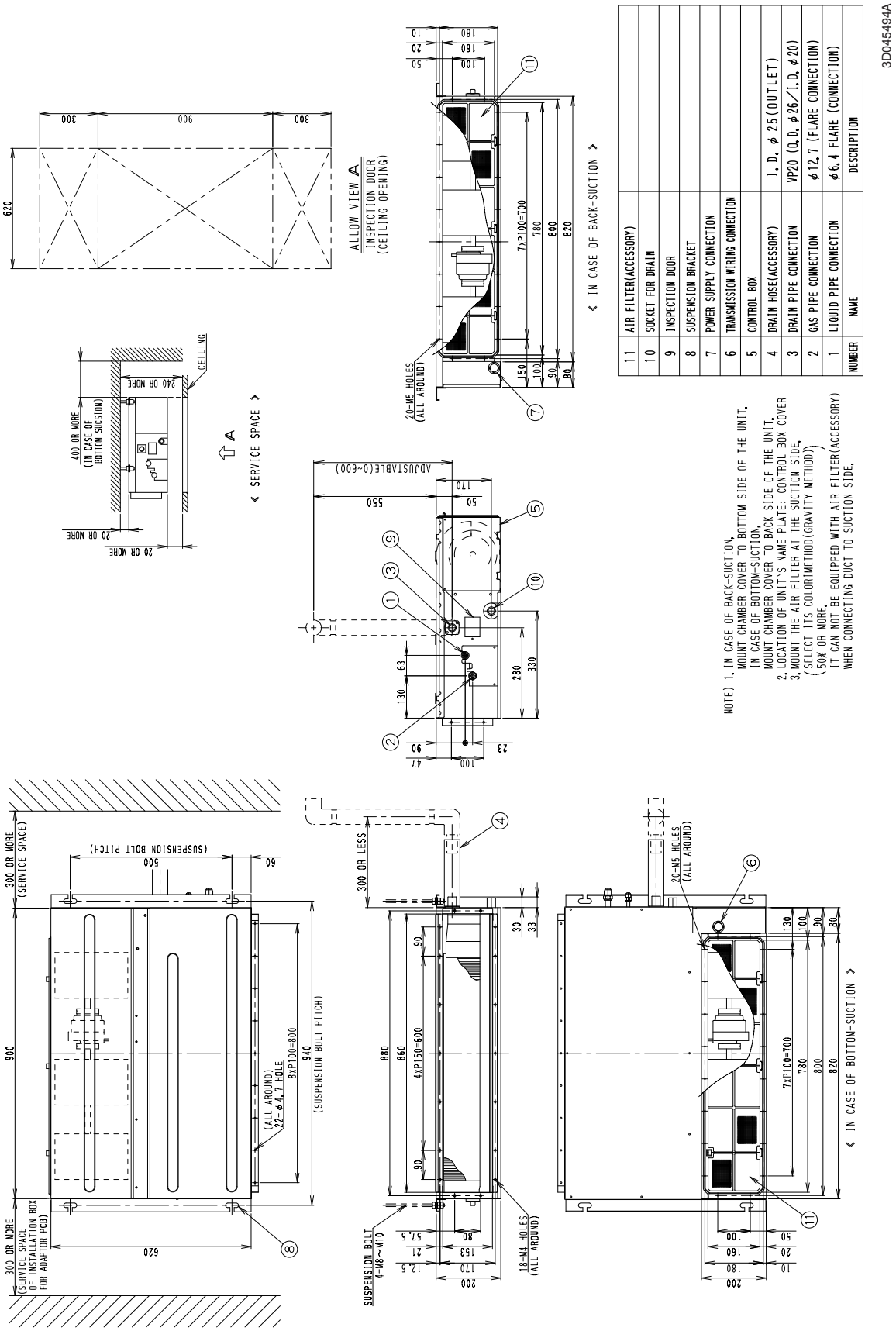

NUMBER	NAME	DESCRIPTION
11	AIR FILTER(ACCESSORY)	
10	SOCKET FOR DRAIN	
9	INSPECTION DOOR	
8	SUSPENSION BRACKET	
7	POWER SUPPLY CONNECTION	
6	TRANSMISSION WIRING CONNECTION	
5	CONTROL BOX	
4	DRAIN HOSE(ACCESSORY)	I. D. φ 25(OUTLET)
3	DRAIN PIPE CONNECTION	VP20 (O.D. φ26/I.D. φ20)
2	GAS PIPE CONNECTION	φ12.7 (FLARE CONNECTION)
1	LIQUID PIPE CONNECTION	φ6.4 FLARE (CONNECTION)

FXDQ63NAVE (with Drain Pump)

Unit (mm)

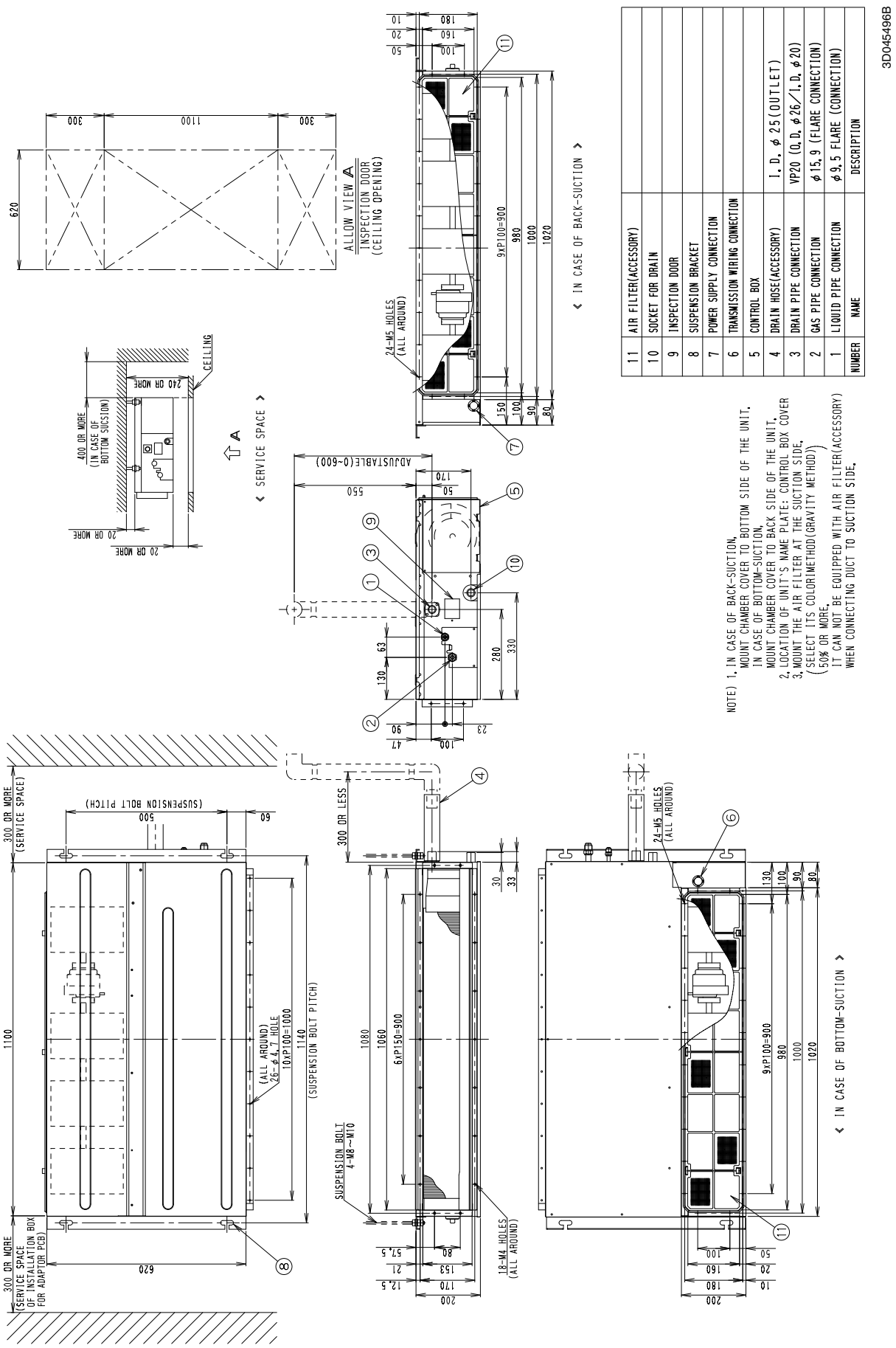

NUMBER	NAME	DESCRIPTION
11	AIR FILTER(ACCESSORY)	
10	SOCKET FOR DRAIN	
9	INSPECTION DOOR	
8	SUSPENSION BRACKET	
7	POWER SUPPLY CONNECTION	
6	TRANSMISSION WIRING CONNECTION	
5	CONTROL BOX	
4	DRAIN HOSE(ACCESSORY)	I. D. φ25(OUTLET)
3	DRAIN PIPE CONNECTION	VP20 (O.D. φ26/I.D. φ20)
2	GAS PIPE CONNECTION	φ15.9 (FLARE CONNECTION)
1	LIQUID PIPE CONNECTION	φ9.5 FLARE (CONNECTION)

NOTE) 1. IN CASE OF BACK-SUCTION,
MOUNT CHAMBER COVER TO BOTTOM SIDE OF THE UNIT.
IN CASE OF BOTTOM-SUCTION,
MOUNT CHAMBER COVER TO BACK SIDE OF THE UNIT.
2. LOCATION OF UNIT'S NAME PLATE: CONTROL BOX COVER
3. MOUNT THE AIR FILTER AT THE SUCTION SIDE.
(SELECT ITS COLORIMETHOD(GRAVITY METHOD))
50% OR MORE.
IT CAN NOT BE EQUIPPED WITH AIR FILTER(ACCESSORY)
WHEN CONNECTING DUCT TO SUCTION SIDE.

3D045496B

FXDQ20N / 25N / 32N / 40N / 50NVET (without Drain Pump)

Unit (mm)

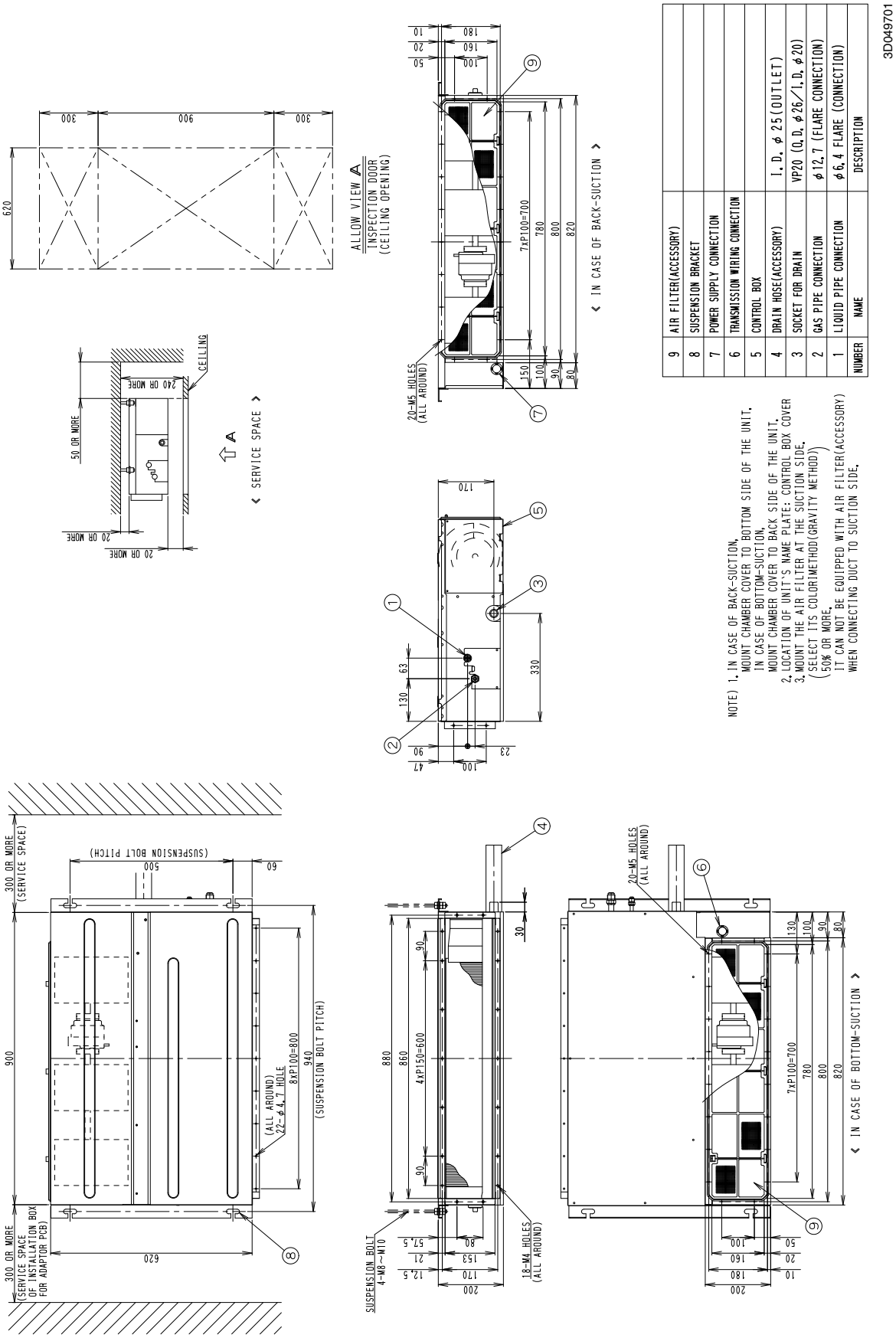

NUMBER	NAME	DESCRIPTION
9	AIR FILTER(ACCESSORY)	
8	SUSPENSION BRACKET	
7	POWER SUPPLY CONNECTION	
6	TRANSMISSION WIRING CONNECTION	
5	CONTROL BOX	
4	DRAIN HOSE(ACCESSORY)	I.D. φ25(OUTLET)
3	SOCKET FOR DRAIN	VP20 (O.D. φ26/I.D. φ20)
2	GAS PIPE CONNECTION	φ12.7 (FLARE CONNECTION)
1	LIQUID PIPE CONNECTION	φ6.4 FLARE (CONNECTION)

NOTE) 1. IN CASE OF BACK-SUCTION,
MOUNT CHAMBER COVER TO BOTTOM SIDE OF THE UNIT.
IN CASE OF BOTTOM-SUCTION,
MOUNT CHAMBER COVER TO BACK SIDE OF THE UNIT.
2. LOCATION OF UNIT'S NAME PLATE: CONTROL BOX COVER
3. MOUNT THE AIR FILTER AT THE SUCTION SIDE.
(SELECT ITS COLORIMETHOD(GRAVITY METHOD))
(50% OR MORE.
IT CAN NOT BE EQUIPPED WITH AIR FILTER(ACCESSORY)
WHEN CONNECTING DUCT TO SUCTION SIDE.

FXDQ63NVET (without Drain Pump)

Unit (mm)

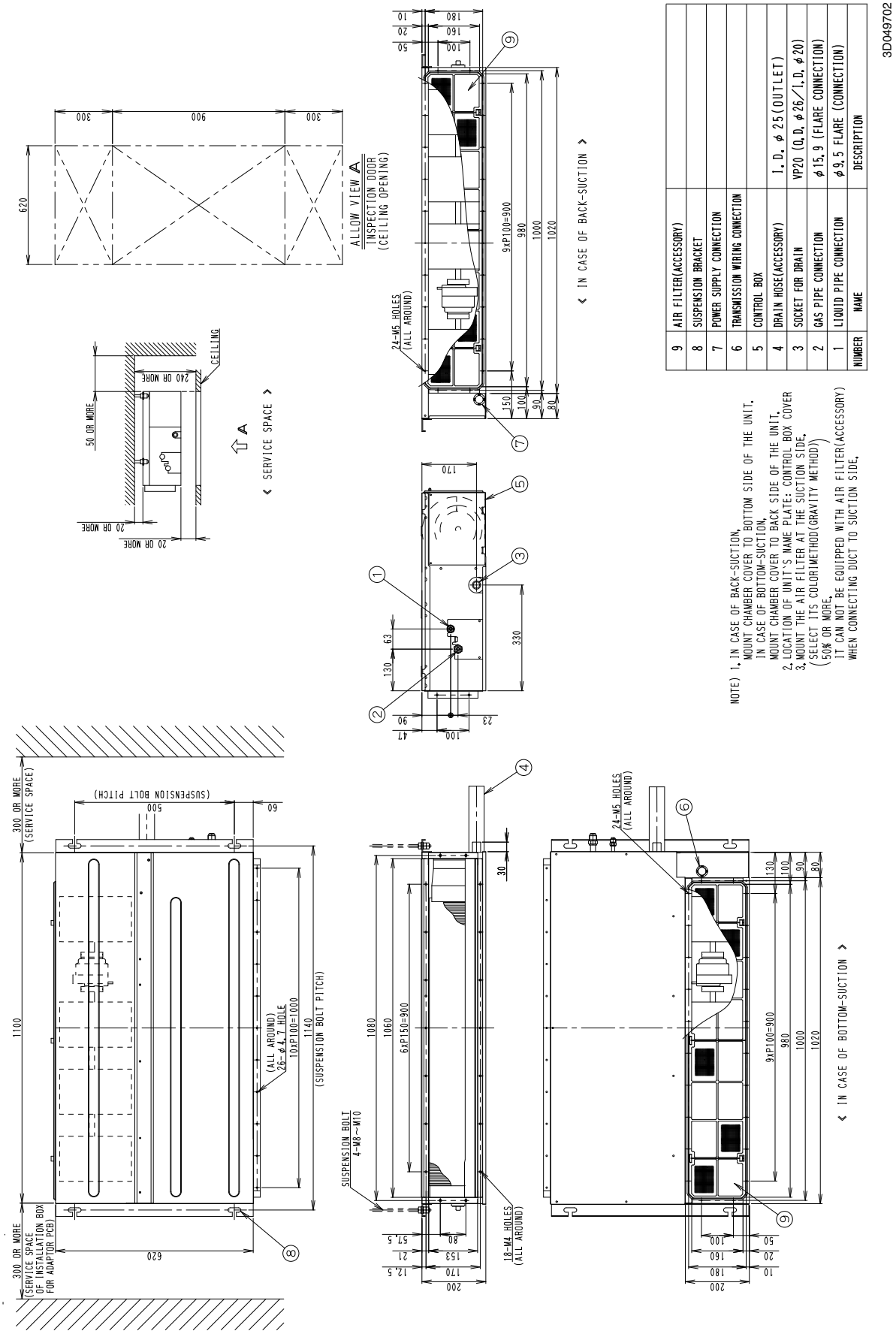

NUMBER	NAME	DESCRIPTION
9	AIR FILTER(ACCESSORY)	
8	SUSPENSION BRACKET	
7	POWER SUPPLY CONNECTION	
6	TRANSMISSION WIRING CONNECTION	
5	CONTROL BOX	
4	DRAIN HOSE(ACCESSORY)	I. D. φ25(OUTLET)
3	SOCKET FOR DRAIN	VP20 (O.D. φ26/I.D. φ20)
2	GAS PIPE CONNECTION	φ15.9 (FLARE CONNECTION)
1	LIQUID PIPE CONNECTION	φ9.5 FLARE (CONNECTION)

NOTE) 1. IN CASE OF BACK-SUCTION,
MOUNT CHAMBER COVER TO BOTTOM SIDE OF THE UNIT.
IN CASE OF BOTTOM-SUCTION,
MOUNT CHAMBER COVER TO BACK SIDE OF THE UNIT.
2. LOCATION OF UNIT'S NAME PLATE: CONTROL BOX COVER
3. MOUNT THE AIR FILTER AT THE SUCTION SIDE.
(SELECT ITS COLOR(METHOD(GRAVITY METHOD))
(50% OR MORE.
IT CAN NOT BE EQUIPPED WITH AIR FILTER(ACCESSORY)
WHEN CONNECTING DUCT TO SUCTION SIDE.

4. Piping Diagrams

4.1 FXDQ-P

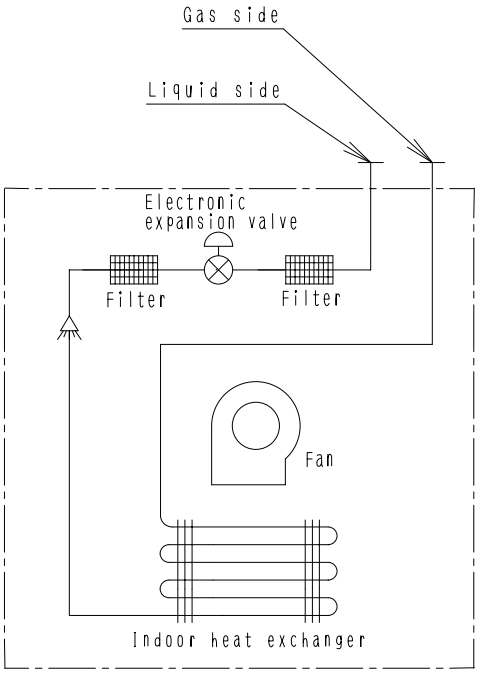

4D043864G

■ **Refrigerant pipe connection port diameters**

(mm)

Model	Gas	Liquid
FXDQ20P / 25P / 32PVE(T)	ϕ12.7	ϕ6.4

4.2 FXDQ-N(A)

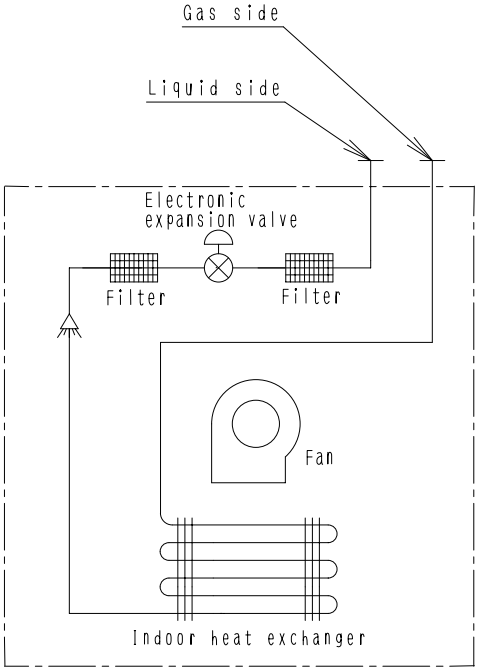

4D043864H

■ **Refrigerant pipe connection port diameters**

(mm)

Model	Gas	Liquid
FXDQ20N(A) / 25N(A) / 32N(A) / 40N(A) / 50N(A)VE(T)	ϕ12.7	ϕ6.4
FXDQ63N(A)VE(T)	ϕ15.9	ϕ9.5

5. Wiring Diagrams

5.1 FXDQ-P

FXDQ20P / 25P / 32PVE (with Drain Pump)

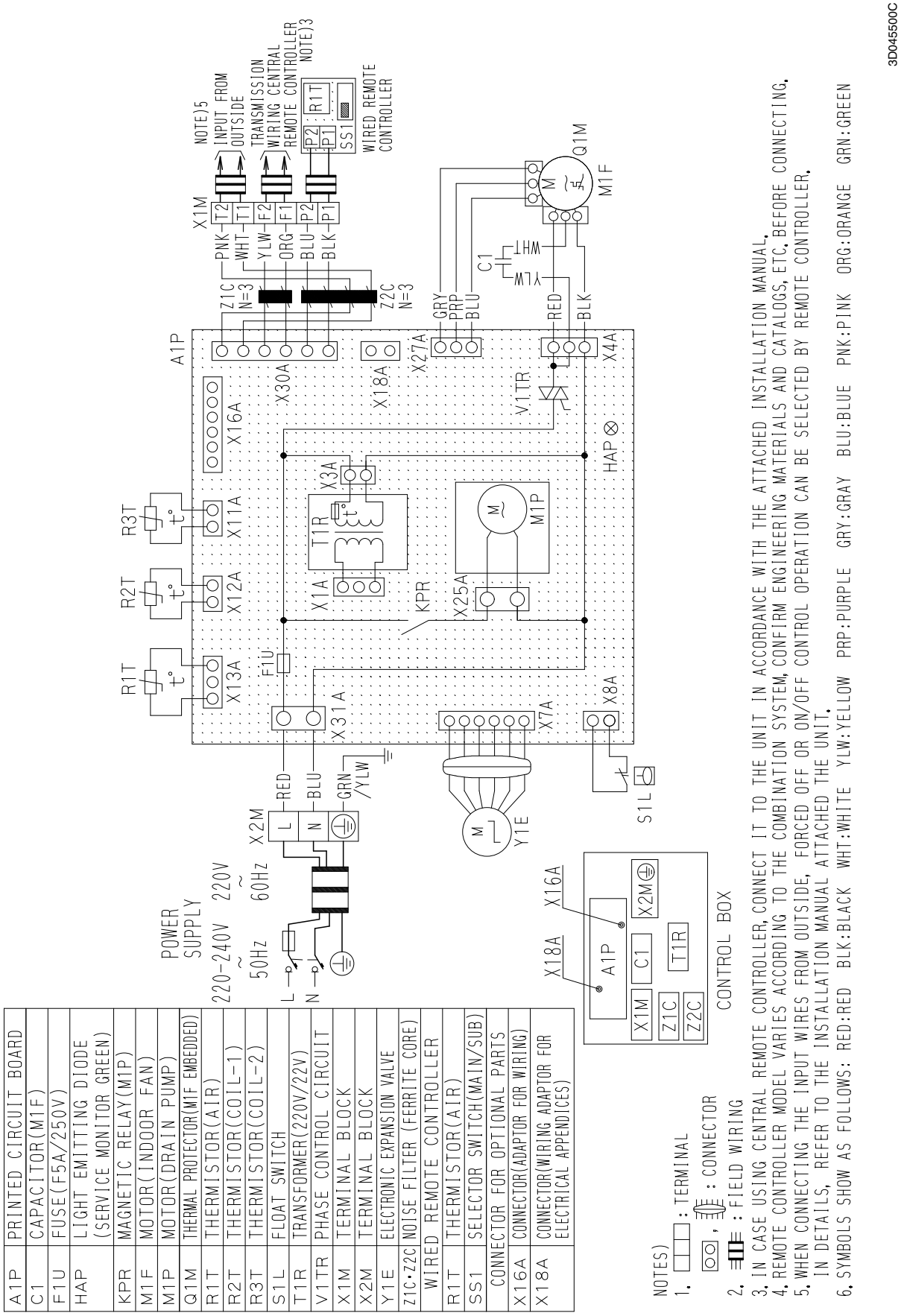

FXDQ20P / 25P / 32PVET (without Drain Pump)

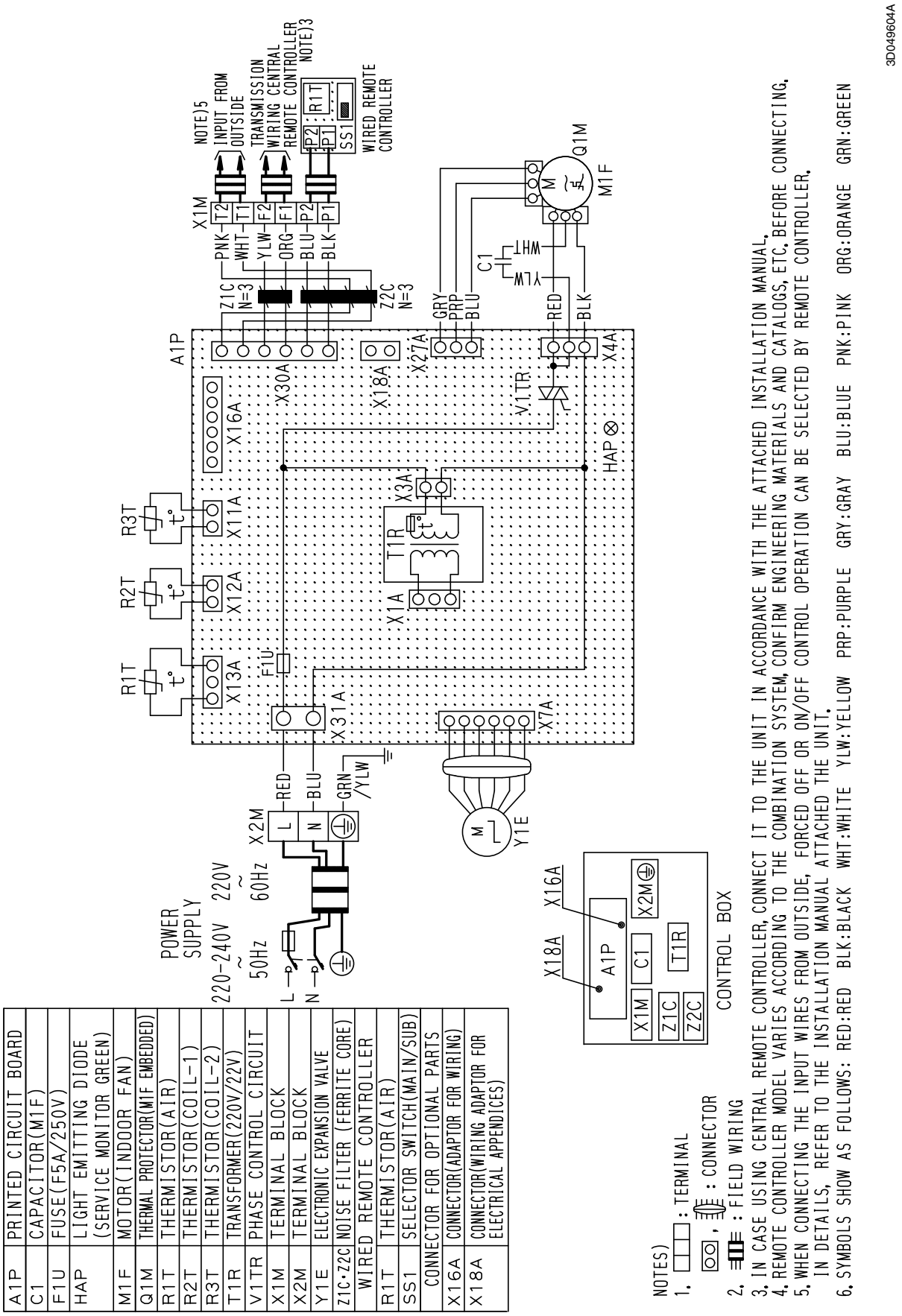

5.2 FXDQ-N(A)

FXDQ20NA / 25NA / 32NA / 40NA / 50NA / 63NAVE (with Drain Pump)

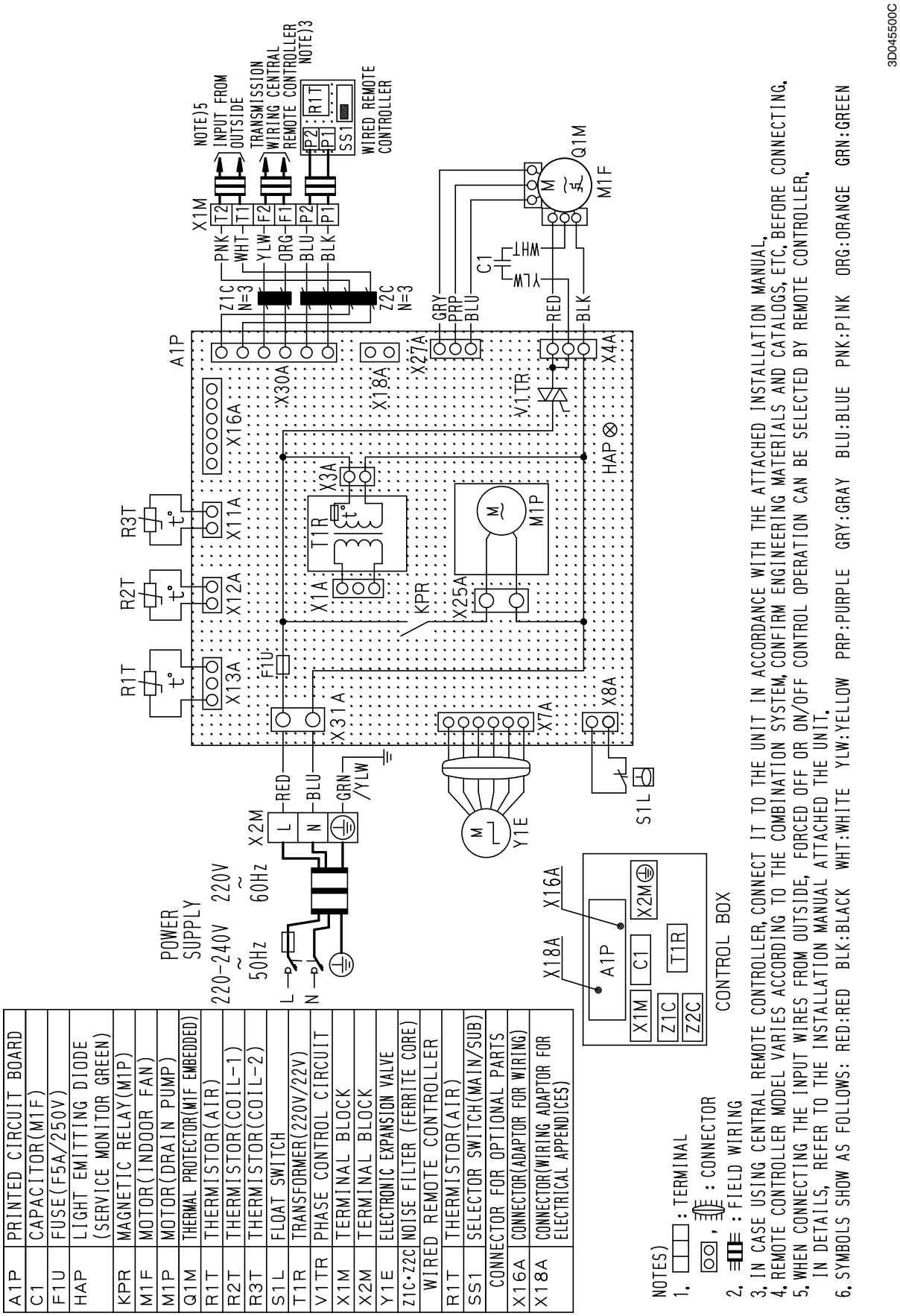

FXDQ20N / 25N / 32N / 40N / 50N / 63NVET (without Drain Pump)

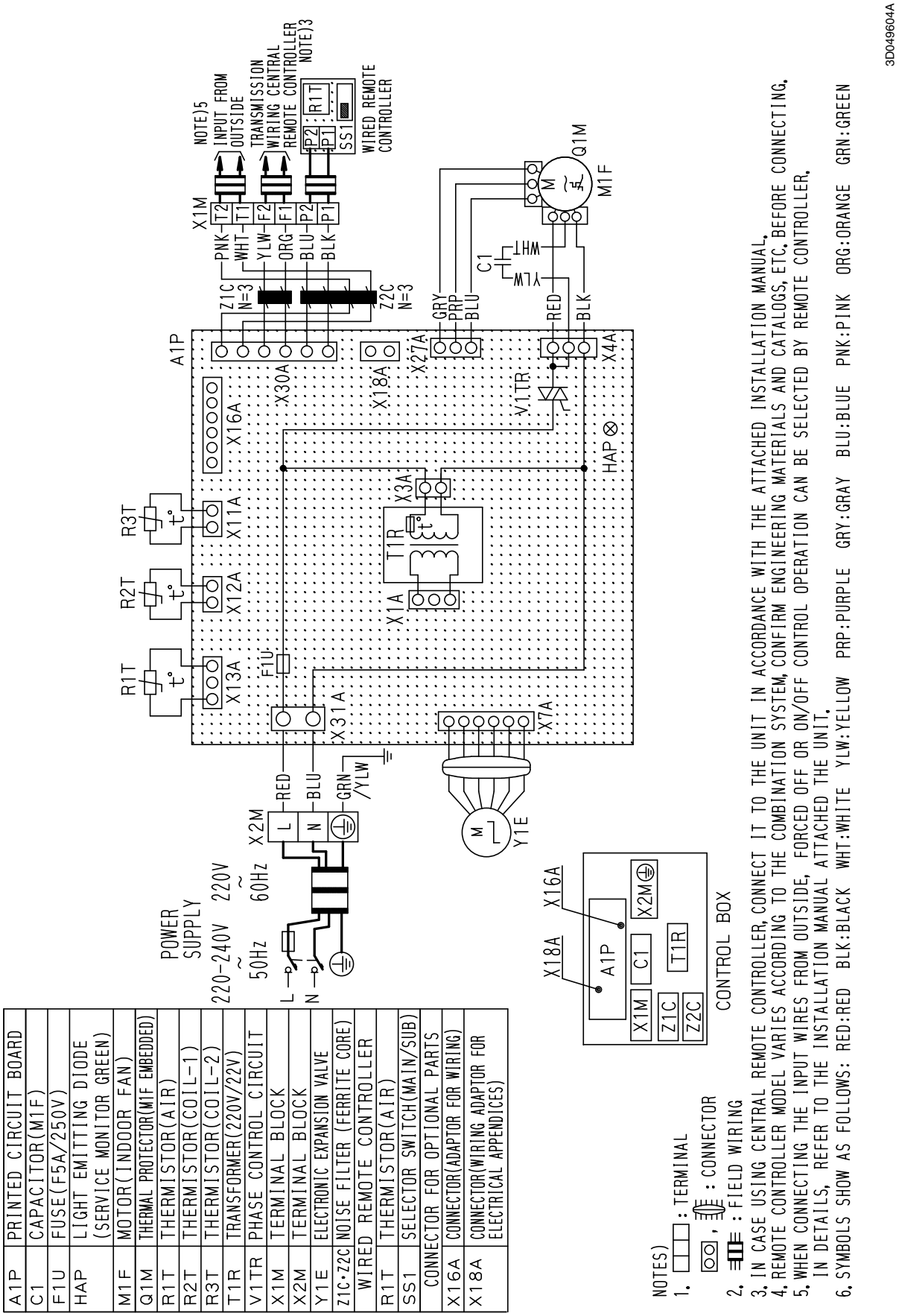

6. Electric Characteristics

6.1 FXDQ-P

Model	Power supply					IFM		Input(W)	
	Hz	Volts	Voltage range	MCA	MFA	KW	FLA	Cooling	Heating
FXDQ20PVE	50	220-240V	Max. 264V Min. 198V	0.8	15	0.062	0.6	86	67
FXDQ25PVE				0.8	15	0.062	0.6	86	67
FXDQ32PVE				0.8	15	0.062	0.6	89	70
FXDQ20PVET	50	220-240V	Max. 264V Min. 198V	0.7	15	0.062	0.6	67	67
FXDQ25PVET				0.7	15	0.062	0.6	67	67
FXDQ32PVET				0.7	15	0.062	0.6	70	70

5

Symbols:

MCA : Min. Circuit Amps (A)
MFA : Max. Fuse Amps (See note 5)
KW : Fan Motor Rated Output(kW)
FLA : Full Load Amps(A)
IFM : Indoor Fan Motor

Note:

1. Voltage range
   Units are suitable for use on electrical systems where voltage supplied to unit terminals is not below or above listed range limits.
2. Maximum allowable voltage unbalance between phases is 2%.
3. MCA/MFA
   MCA = 1.25 X FLA
   MFA ≦ 4 X FLA
   (Next lower standard fuse rating. Min. 15A)
4. Select wire size based on the MCA.
5. Instead of fuse, use circuit breaker.

C: 4D052138

6.2 FXDQ-N(A)

Model	Power supply					IFM		Input(W)	
	Hz	Volts	Voltage range	MCA	MFA	KW	FLA	Cooling	Heating
FXDQ20NVET	50	220~240V	Max. 264V Min. 198V	0.9	15	0.062	0.7	137	137
FXDQ25NVET				0.9	15	0.062	0.7	137	137
FXDQ32NVET				0.9	15	0.062	0.7	137	137
FXDQ40NVET				1.0	15	0.062	0.8	147	147
FXDQ50NVET				1.0	15	0.13	0.8	152	152
FXDQ63NVET				1.1	15	0.13	0.9	168	168
FXDQ20NAVE	50	220~240V	Max. 264V Min. 198V	0.9	15	0.062	0.7	150	137
FXDQ25NAVE				0.9	15	0.062	0.7	150	137
FXDQ32NAVE				0.9	15	0.062	0.7	150	137
FXDQ40NAVE				1.0	15	0.062	0.8	160	147
FXDQ50NAVE				1.0	15	0.13	0.8	165	152
FXDQ63NAVE				1.1	15	0.13	0.9	181	168

Symbols:

MCA : Min. Circuit Amps (A)
MFA : Max. Fuse Amps (See note 5)
KW : Fan Motor Rated Output(kW)
FLA : Full Load Amps(A)
IFM : Indoor Fan Motor

Note:

1. Voltage range
   Units are suitable for use on electrical systems where voltage supplied to unit terminals is not below or above listed range limits.
2. Maximum allowable voltage unbalance between phases is 2%.
3. MCA/MFA
   MCA = 1.25 X FLA
   MFA ≦ 4 X FLA
   (Next lower standard fuse rating. Min. 15A)
4. Select wire size based on the MCA.
5. Instead of fuse, use circuit breaker.

C : 4D045743B

7. Capacity Tables

7.1 FXDQ-P

Cooling Capacity [50Hz]

Unit Size	Outdoor air temp. °CDB	Indoor air temp.													
		14.0°CWB		16.0°CWB		18.0°CWB		19.0°CWB		20.0°CWB		22.0°CWB		24.0°CWB	
		20°CDB		23°CDB		26°CDB		27°CDB		28°CDB		30°CDB		32°CDB	
		TC	SC	TC	SC	TC	SC	TC	SC	TC	SC	TC	SC	TC	SC
20	10.0	1.5	1.4	1.8	1.6	2.1	1.8	2.2	1.9	2.3	1.9	2.6	1.8	2.9	2.0
	12.0	1.5	1.4	1.8	1.6	2.1	1.8	2.2	1.9	2.3	1.9	2.6	1.8	2.9	2.0
	14.0	1.5	1.4	1.8	1.6	2.1	1.8	2.2	1.9	2.3	1.9	2.6	1.8	2.8	1.9
	16.0	1.5	1.4	1.8	1.6	2.1	1.8	2.2	1.9	2.3	1.9	2.6	1.8	2.8	1.9
	18.0	1.5	1.4	1.8	1.6	2.1	1.8	2.2	1.9	2.3	1.9	2.6	1.8	2.7	1.9
	20.0	1.5	1.4	1.8	1.6	2.1	1.8	2.2	1.9	2.3	1.9	2.6	1.8	2.7	1.9
	21.0	1.5	1.4	1.8	1.6	2.1	1.8	2.2	1.9	2.3	1.9	2.6	1.8	2.7	1.9
	23.0	1.5	1.4	1.8	1.6	2.1	1.8	2.2	1.9	2.3	1.9	2.6	1.8	2.6	1.9
	25.0	1.5	1.4	1.8	1.6	2.1	1.8	2.2	1.9	2.3	1.9	2.6	1.8	2.6	1.9
	27.0	1.5	1.4	1.8	1.6	2.1	1.8	2.2	1.9	2.3	1.9	2.5	1.8	2.6	1.9
	29.0	1.5	1.4	1.8	1.6	2.1	1.8	2.2	1.9	2.3	1.9	2.5	1.8	2.5	1.8
	31.0	1.5	1.4	1.8	1.6	2.1	1.8	2.2	1.9	2.3	1.9	2.4	1.7	2.5	1.8
	33.0	1.5	1.4	1.8	1.6	2.1	1.8	2.2	1.9	2.3	1.9	2.4	1.7	2.5	1.8
	35.0	1.5	1.4	1.8	1.6	2.1	1.8	2.2	1.9	2.3	1.9	2.4	1.7	2.4	1.8
	37.0	1.5	1.4	1.8	1.6	2.1	1.8	2.2	1.9	2.3	1.9	2.3	1.7	2.4	1.8
	39.0	1.5	1.4	1.8	1.6	2.1	1.8	2.2	1.9	2.2	1.9	2.3	1.6	2.3	1.8
25	10.0	1.9	1.6	2.3	1.9	2.6	2.1	2.8	2.1	3.0	2.2	3.4	2.2	3.7	2.3
	12.0	1.9	1.6	2.3	1.9	2.6	2.1	2.8	2.1	3.0	2.2	3.4	2.2	3.6	2.2
	14.0	1.9	1.6	2.3	1.9	2.6	2.1	2.8	2.1	3.0	2.2	3.4	2.2	3.6	2.2
	16.0	1.9	1.6	2.3	1.9	2.6	2.1	2.8	2.1	3.0	2.2	3.4	2.2	3.5	2.2
	18.0	1.9	1.6	2.3	1.9	2.6	2.1	2.8	2.1	3.0	2.2	3.4	2.2	3.5	2.2
	20.0	1.9	1.6	2.3	1.9	2.6	2.1	2.8	2.1	3.0	2.2	3.4	2.2	3.4	2.2
	21.0	1.9	1.6	2.3	1.9	2.6	2.1	2.8	2.1	3.0	2.2	3.4	2.2	3.4	2.2
	23.0	1.9	1.6	2.3	1.9	2.6	2.1	2.8	2.1	3.0	2.2	3.3	2.2	3.4	2.1
	25.0	1.9	1.6	2.3	1.9	2.6	2.1	2.8	2.1	3.0	2.2	3.3	2.2	3.3	2.1
	27.0	1.9	1.6	2.3	1.9	2.6	2.1	2.8	2.1	3.0	2.2	3.2	2.2	3.3	2.1
	29.0	1.9	1.6	2.3	1.9	2.6	2.1	2.8	2.1	3.0	2.2	3.2	2.1	3.2	2.1
	31.0	1.9	1.6	2.3	1.9	2.6	2.1	2.8	2.1	3.0	2.2	3.1	2.1	3.2	2.1
	33.0	1.9	1.6	2.3	1.9	2.6	2.1	2.8	2.1	3.0	2.2	3.1	2.1	3.1	2.1
	35.0	1.9	1.6	2.3	1.9	2.6	2.1	2.8	2.1	3.0	2.2	3.0	2.1	3.1	2.0
	37.0	1.9	1.6	2.3	1.9	2.6	2.1	2.8	2.1	2.9	2.2	3.0	2.0	3.0	2.0
	39.0	1.9	1.6	2.3	1.9	2.6	2.1	2.8	2.1	2.9	2.1	2.9	2.0	3.0	2.0
32	10.0	2.4	2.0	2.9	2.3	3.4	2.4	3.6	2.6	3.8	2.7	4.3	2.8	4.7	2.9
	12.0	2.4	2.0	2.9	2.3	3.4	2.4	3.6	2.6	3.8	2.7	4.3	2.8	4.7	2.9
	14.0	2.4	2.0	2.9	2.3	3.4	2.4	3.6	2.6	3.8	2.7	4.3	2.8	4.6	2.8
	16.0	2.4	2.0	2.9	2.3	3.4	2.4	3.6	2.6	3.8	2.7	4.3	2.8	4.6	2.8
	18.0	2.4	2.0	2.9	2.3	3.4	2.4	3.6	2.6	3.8	2.7	4.3	2.8	4.5	2.8
	20.0	2.4	2.0	2.9	2.3	3.4	2.4	3.6	2.6	3.8	2.7	4.3	2.8	4.4	2.8
	21.0	2.4	2.0	2.9	2.3	3.4	2.4	3.6	2.6	3.8	2.7	4.3	2.8	4.4	2.7
	23.0	2.4	2.0	2.9	2.3	3.4	2.4	3.6	2.6	3.8	2.7	4.2	2.8	4.3	2.7
	25.0	2.4	2.0	2.9	2.3	3.4	2.4	3.6	2.6	3.8	2.7	4.2	2.7	4.3	2.7
	27.0	2.4	2.0	2.9	2.3	3.4	2.4	3.6	2.6	3.8	2.7	4.1	2.7	4.2	2.7
	29.0	2.4	2.0	2.9	2.3	3.4	2.4	3.6	2.6	3.8	2.7	4.1	2.7	4.2	2.6
	31.0	2.4	2.0	2.9	2.3	3.4	2.4	3.6	2.6	3.8	2.7	4.0	2.6	4.1	2.6
	33.0	2.4	2.0	2.9	2.3	3.4	2.4	3.6	2.6	3.8	2.7	3.9	2.6	4.0	2.6
	35.0	2.4	2.0	2.9	2.3	3.4	2.4	3.6	2.6	3.8	2.7	3.9	2.6	4.0	2.5
	37.0	2.4	2.0	2.9	2.3	3.4	2.4	3.6	2.6	3.7	2.6	3.8	2.6	3.9	2.5
	39.0	2.4	2.0	2.9	2.3	3.4	2.4	3.6	2.6	3.7	2.6	3.8	2.5	3.8	2.5

TC : Total capacity ; kW
SC : Sensible capacity ; kW

Refer to Outdoor Unit Capacity Tables : on page 411~, 470~, for the actual performance data of each indoor and outdoor unit combination.

7.2 FXDQ-N(A)

Cooling Capacity [50Hz]

Cooling capacity

Unit Size	Outdoor air temp. °CDB	Indoor air temp. 14.0°CWB 20°CDB TC	SC	16.0°CWB 23°CDB TC	SC	18.0°CWB 26°CDB TC	SC	19.0°CWB 27°CDB TC	SC	20.0°CWB 28°CDB TC	SC	22.0°CWB 30°CDB TC	SC	24.0°CWB 32°CDB TC	SC
20	10.0	1.5	1.4	1.8	1.6	2.1	1.8	2.2	1.9	2.3	1.9	2.6	1.8	2.9	2.0
	12.0	1.5	1.4	1.8	1.6	2.1	1.8	2.2	1.9	2.3	1.9	2.6	1.8	2.9	2.0
	14.0	1.5	1.4	1.8	1.6	2.1	1.8	2.2	1.9	2.3	1.9	2.6	1.8	2.8	1.9
	16.0	1.5	1.4	1.8	1.6	2.1	1.8	2.2	1.9	2.3	1.9	2.6	1.8	2.8	1.9
	18.0	1.5	1.4	1.8	1.6	2.1	1.8	2.2	1.9	2.3	1.9	2.6	1.8	2.7	1.9
	20.0	1.5	1.4	1.8	1.6	2.1	1.8	2.2	1.9	2.3	1.9	2.6	1.8	2.7	1.9
	21.0	1.5	1.4	1.8	1.6	2.1	1.8	2.2	1.9	2.3	1.9	2.6	1.8	2.7	1.9
	23.0	1.5	1.4	1.8	1.6	2.1	1.8	2.2	1.9	2.3	1.9	2.6	1.8	2.6	1.9
	25.0	1.5	1.4	1.8	1.6	2.1	1.8	2.2	1.9	2.3	1.9	2.6	1.8	2.6	1.9
	27.0	1.5	1.4	1.8	1.6	2.1	1.8	2.2	1.9	2.3	1.9	2.5	1.8	2.6	1.9
	29.0	1.5	1.4	1.8	1.6	2.1	1.8	2.2	1.9	2.3	1.9	2.5	1.8	2.5	1.8
	31.0	1.5	1.4	1.8	1.6	2.1	1.8	2.2	1.9	2.3	1.9	2.4	1.7	2.5	1.8
	33.0	1.5	1.4	1.8	1.6	2.1	1.8	2.2	1.9	2.3	1.9	2.4	1.7	2.5	1.8
	35.0	1.5	1.4	1.8	1.6	2.1	1.8	2.2	1.9	2.3	1.9	2.4	1.7	2.4	1.8
	37.0	1.5	1.4	1.8	1.6	2.1	1.8	2.2	1.9	2.3	1.9	2.3	1.7	2.4	1.8
	39.0	1.5	1.4	1.8	1.6	2.1	1.8	2.2	1.9	2.2	1.9	2.3	1.6	2.3	1.8
25	10.0	1.9	1.6	2.3	1.9	2.6	2.1	2.8	2.1	3.0	2.2	3.4	2.2	3.7	2.3
	12.0	1.9	1.6	2.3	1.9	2.6	2.1	2.8	2.1	3.0	2.2	3.4	2.2	3.6	2.2
	14.0	1.9	1.6	2.3	1.9	2.6	2.1	2.8	2.1	3.0	2.2	3.4	2.2	3.6	2.2
	16.0	1.9	1.6	2.3	1.9	2.6	2.1	2.8	2.1	3.0	2.2	3.4	2.2	3.5	2.2
	18.0	1.9	1.6	2.3	1.9	2.6	2.1	2.8	2.1	3.0	2.2	3.4	2.2	3.5	2.2
	20.0	1.9	1.6	2.3	1.9	2.6	2.1	2.8	2.1	3.0	2.2	3.4	2.2	3.4	2.2
	21.0	1.9	1.6	2.3	1.9	2.6	2.1	2.8	2.1	3.0	2.2	3.4	2.2	3.4	2.2
	23.0	1.9	1.6	2.3	1.9	2.6	2.1	2.8	2.1	3.0	2.2	3.3	2.2	3.4	2.1
	25.0	1.9	1.6	2.3	1.9	2.6	2.1	2.8	2.1	3.0	2.2	3.3	2.2	3.3	2.1
	27.0	1.9	1.6	2.3	1.9	2.6	2.1	2.8	2.1	3.0	2.2	3.2	2.2	3.3	2.1
	29.0	1.9	1.6	2.3	1.9	2.6	2.1	2.8	2.1	3.0	2.2	3.2	2.1	3.2	2.1
	31.0	1.9	1.6	2.3	1.9	2.6	2.1	2.8	2.1	3.0	2.2	3.1	2.1	3.2	2.1
	33.0	1.9	1.6	2.3	1.9	2.6	2.1	2.8	2.1	3.0	2.2	3.1	2.1	3.1	2.1
	35.0	1.9	1.6	2.3	1.9	2.6	2.1	2.8	2.1	3.0	2.2	3.0	2.1	3.1	2.0
	37.0	1.9	1.6	2.3	1.9	2.6	2.1	2.8	2.1	2.9	2.2	3.0	2.0	3.0	2.0
	39.0	1.9	1.6	2.3	1.9	2.6	2.1	2.8	2.1	2.9	2.1	2.9	2.0	3.0	2.0
32	10.0	2.4	2.0	2.9	2.3	3.4	2.4	3.6	2.6	3.8	2.7	4.3	2.8	4.7	2.9
	12.0	2.4	2.0	2.9	2.3	3.4	2.4	3.6	2.6	3.8	2.7	4.3	2.8	4.7	2.9
	14.0	2.4	2.0	2.9	2.3	3.4	2.4	3.6	2.6	3.8	2.7	4.3	2.8	4.6	2.8
	16.0	2.4	2.0	2.9	2.3	3.4	2.4	3.6	2.6	3.8	2.7	4.3	2.8	4.6	2.8
	18.0	2.4	2.0	2.9	2.3	3.4	2.4	3.6	2.6	3.8	2.7	4.3	2.8	4.5	2.8
	20.0	2.4	2.0	2.9	2.3	3.4	2.4	3.6	2.6	3.8	2.7	4.3	2.8	4.4	2.8
	21.0	2.4	2.0	2.9	2.3	3.4	2.4	3.6	2.6	3.8	2.7	4.3	2.8	4.4	2.7
	23.0	2.4	2.0	2.9	2.3	3.4	2.4	3.6	2.6	3.8	2.7	4.2	2.8	4.3	2.7
	25.0	2.4	2.0	2.9	2.3	3.4	2.4	3.6	2.6	3.8	2.7	4.2	2.7	4.3	2.7
	27.0	2.4	2.0	2.9	2.3	3.4	2.4	3.6	2.6	3.8	2.7	4.1	2.7	4.2	2.7
	29.0	2.4	2.0	2.9	2.3	3.4	2.4	3.6	2.6	3.8	2.7	4.1	2.7	4.2	2.6
	31.0	2.4	2.0	2.9	2.3	3.4	2.4	3.6	2.6	3.8	2.7	4.0	2.6	4.1	2.6
	33.0	2.4	2.0	2.9	2.3	3.4	2.4	3.6	2.6	3.8	2.7	3.9	2.6	4.0	2.6
	35.0	2.4	2.0	2.9	2.3	3.4	2.4	3.6	2.6	3.8	2.7	3.9	2.6	4.0	2.5
	37.0	2.4	2.0	2.9	2.3	3.4	2.4	3.6	2.6	3.7	2.6	3.8	2.6	3.9	2.5
	39.0	2.4	2.0	2.9	2.3	3.4	2.4	3.6	2.6	3.7	2.6	3.8	2.5	3.8	2.5

Cooling capacity

Unit Size	Outdoor air temp. °CDB	Indoor air temp. 14.0°CWB 20°CDB TC	SC	16.0°CWB 23°CDB TC	SC	18.0°CWB 26°CDB TC	SC	19.0°CWB 27°CDB TC	SC	20.0°CWB 28°CDB TC	SC	22.0°CWB 30°CDB TC	SC	24.0°CWB 32°CDB TC	SC
40	10.0	3.0	2.5	3.6	2.8	4.2	3.3	4.5	3.3	4.8	3.2	5.4	3.3	5.9	3.5
	12.0	3.0	2.5	3.6	2.8	4.2	3.3	4.5	3.3	4.8	3.2	5.4	3.3	5.8	3.5
	14.0	3.0	2.5	3.6	2.8	4.2	3.3	4.5	3.3	4.8	3.2	5.4	3.3	5.8	3.5
	16.0	3.0	2.5	3.6	2.8	4.2	3.3	4.5	3.3	4.8	3.2	5.4	3.3	5.7	3.5
	18.0	3.0	2.5	3.6	2.8	4.2	3.3	4.5	3.3	4.8	3.2	5.4	3.3	5.6	3.4
	20.0	3.0	2.5	3.6	2.8	4.2	3.3	4.5	3.3	4.8	3.2	5.4	3.3	5.5	3.4
	21.0	3.0	2.5	3.6	2.8	4.2	3.3	4.5	3.3	4.8	3.2	5.4	3.3	5.5	3.4
	23.0	3.0	2.5	3.6	2.8	4.2	3.3	4.5	3.3	4.8	3.2	5.3	3.3	5.4	3.3
	25.0	3.0	2.5	3.6	2.8	4.2	3.3	4.5	3.3	4.8	3.2	5.2	3.3	5.3	3.3
	27.0	3.0	2.5	3.6	2.8	4.2	3.3	4.5	3.3	4.8	3.2	5.2	3.2	5.3	3.3
	29.0	3.0	2.5	3.6	2.8	4.2	3.3	4.5	3.3	4.8	3.2	5.1	3.2	5.2	3.3
	31.0	3.0	2.5	3.6	2.8	4.2	3.3	4.5	3.3	4.8	3.2	5.0	3.2	5.1	3.2
	33.0	3.0	2.5	3.6	2.8	4.2	3.3	4.5	3.3	4.8	3.2	4.9	3.2	5.0	3.2
	35.0	3.0	2.5	3.6	2.8	4.2	3.3	4.5	3.3	4.7	3.2	4.9	3.1	5.0	3.2
	37.0	3.0	2.5	3.6	2.8	4.2	3.3	4.5	3.3	4.7	3.2	4.8	3.1	4.9	3.1
	39.0	3.0	2.5	3.6	2.8	4.2	3.3	4.5	3.3	4.6	3.2	4.7	3.1	4.8	3.1
50	10.0	3.8	3.1	4.5	3.5	5.2	3.9	5.6	4.0	6.0	4.0	6.7	4.2	7.4	4.1
	12.0	3.8	3.1	4.5	3.5	5.2	3.9	5.6	4.0	6.0	4.0	6.7	4.2	7.3	4.1
	14.0	3.8	3.1	4.5	3.5	5.2	3.9	5.6	4.0	6.0	4.0	6.7	4.2	7.2	4.1
	16.0	3.8	3.1	4.5	3.5	5.2	3.9	5.6	4.0	6.0	4.0	6.7	4.2	7.1	4.0
	18.0	3.8	3.1	4.5	3.5	5.2	3.9	5.6	4.0	6.0	4.0	6.7	4.2	7.0	4.0
	20.0	3.8	3.1	4.5	3.5	5.2	3.9	5.6	4.0	6.0	4.0	6.7	4.2	6.9	4.0
	21.0	3.8	3.1	4.5	3.5	5.2	3.9	5.6	4.0	6.0	4.0	6.7	4.2	6.8	4.0
	23.0	3.8	3.1	4.5	3.5	5.2	3.9	5.6	4.0	6.0	4.0	6.6	4.2	6.7	3.9
	25.0	3.8	3.1	4.5	3.5	5.2	3.9	5.6	4.0	6.0	4.0	6.5	4.1	6.6	3.9
	27.0	3.8	3.1	4.5	3.5	5.2	3.9	5.6	4.0	6.0	4.0	6.4	4.1	6.6	3.9
	29.0	3.8	3.1	4.5	3.5	5.2	3.9	5.6	4.0	6.0	4.0	6.3	4.0	6.5	3.8
	31.0	3.8	3.1	4.5	3.5	5.2	3.9	5.6	4.0	6.0	4.0	6.2	4.0	6.4	3.8
	33.0	3.8	3.1	4.5	3.5	5.2	3.9	5.6	4.0	6.0	4.0	6.1	4.0	6.3	3.8
	35.0	3.8	3.1	4.5	3.5	5.2	3.9	5.6	4.0	5.9	4.0	6.0	3.9	6.2	3.7
	37.0	3.8	3.1	4.5	3.5	5.2	3.9	5.6	4.0	5.8	4.0	5.9	3.9	6.1	3.7
	39.0	3.8	3.1	4.5	3.5	5.2	3.9	5.6	4.0	5.7	3.9	5.8	3.9	6.0	3.7
63	10.0	4.8	3.8	5.7	4.3	6.6	4.8	7.1	4.9	7.6	4.9	8.5	5.1	9.3	5.7
	12.0	4.8	3.8	5.7	4.3	6.6	4.8	7.1	4.9	7.6	4.9	8.5	5.1	9.2	5.6
	14.0	4.8	3.8	5.7	4.3	6.6	4.8	7.1	4.9	7.6	4.9	8.5	5.1	9.1	5.5
	16.0	4.8	3.8	5.7	4.3	6.6	4.8	7.1	4.9	7.6	4.9	8.5	5.1	9.0	5.4
	18.0	4.8	3.8	5.7	4.3	6.6	4.8	7.1	4.9	7.6	4.9	8.5	5.1	8.8	5.4
	20.0	4.8	3.8	5.7	4.3	6.6	4.8	7.1	4.9	7.6	4.9	8.5	5.1	8.7	5.3
	21.0	4.8	3.8	5.7	4.3	6.6	4.8	7.1	4.9	7.6	4.9	8.5	5.1	8.7	5.3
	23.0	4.8	3.8	5.7	4.3	6.6	4.8	7.1	4.9	7.6	4.9	8.4	5.1	8.5	5.2
	25.0	4.8	3.8	5.7	4.3	6.6	4.8	7.1	4.9	7.6	4.9	8.3	5.0	8.4	5.1
	27.0	4.8	3.8	5.7	4.3	6.6	4.8	7.1	4.9	7.6	4.9	8.1	5.0	8.3	5.1
	29.0	4.8	3.8	5.7	4.3	6.6	4.8	7.1	4.9	7.6	4.9	8.0	4.9	8.2	5.0
	31.0	4.8	3.8	5.7	4.3	6.6	4.8	7.1	4.9	7.6	4.9	7.9	4.9	8.1	4.9
	33.0	4.8	3.8	5.7	4.3	6.6	4.8	7.1	4.9	7.6	4.9	7.8	4.8	7.9	4.9
	35.0	4.8	3.8	5.7	4.3	6.6	4.8	7.1	4.9	7.5	4.8	7.7	4.8	7.8	4.8
	37.0	4.8	3.8	5.7	4.3	6.6	4.8	7.1	4.9	7.4	4.8	7.5	4.7	7.7	4.8
	39.0	4.8	3.8	5.7	4.3	6.6	4.8	7.1	4.9	7.2	4.7	7.4	4.7	7.6	4.7

TC Total capacity ; kW
SC Sensible capacity ; kW

Refer to Outdoor Unit Capacity Tables : on page 411~, 470~, for the actual performance data of each indoor and outdoor unit combination.

8. Fan Performances

8.1 FXDQ-P

FXDQ20P / 25PVE(T)

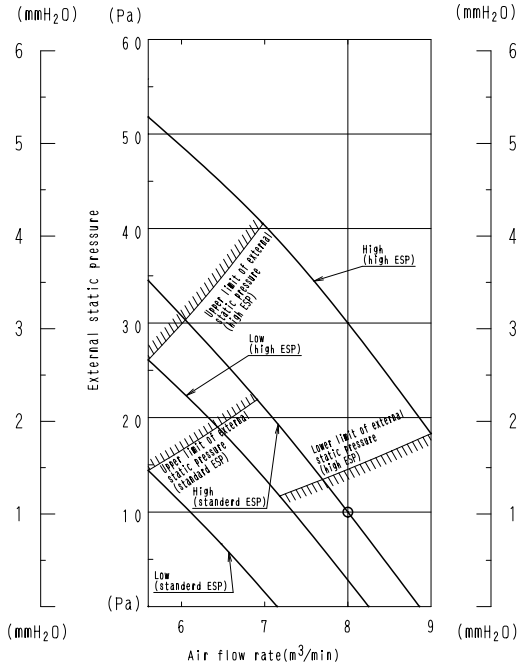

3D052156

FXDQ32PVE(T)

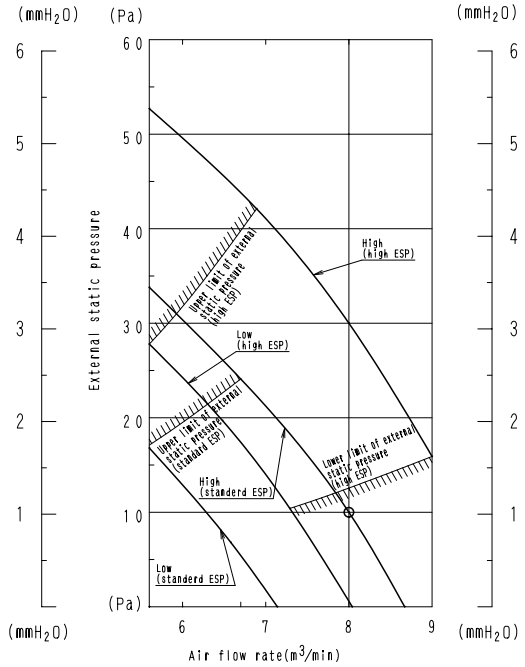

3D052157

Notes:

1. The remote controller can be used to switch between “high” and “low”.
2. The air flow is set to “standard” before leaving the factory.
   It is possible to switch between “standard ESP” and “high ESP” by the remote controller.

8.2 FXDQ-N(A)

FXDQ20 · 25N(A)VE(T)

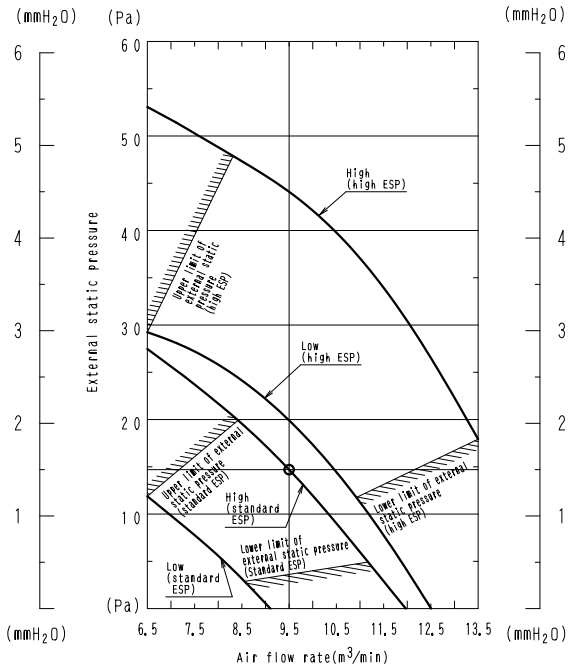

FXDQ32N(A)VE(T)

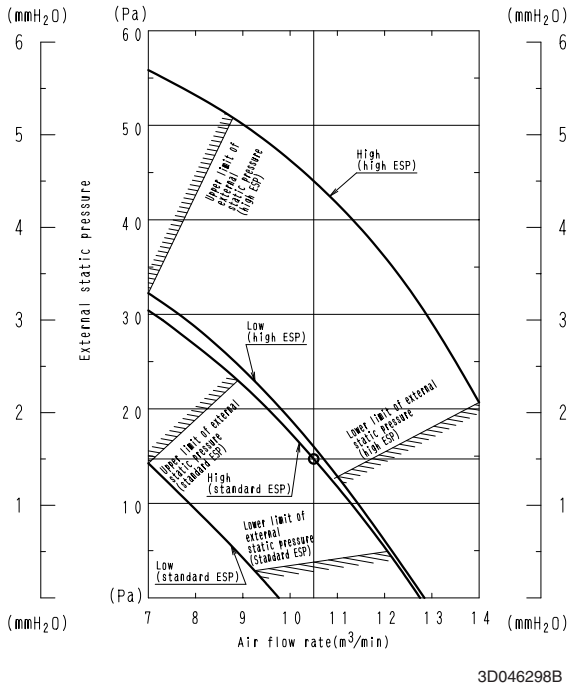

FXDQ40N(A)VE(T)

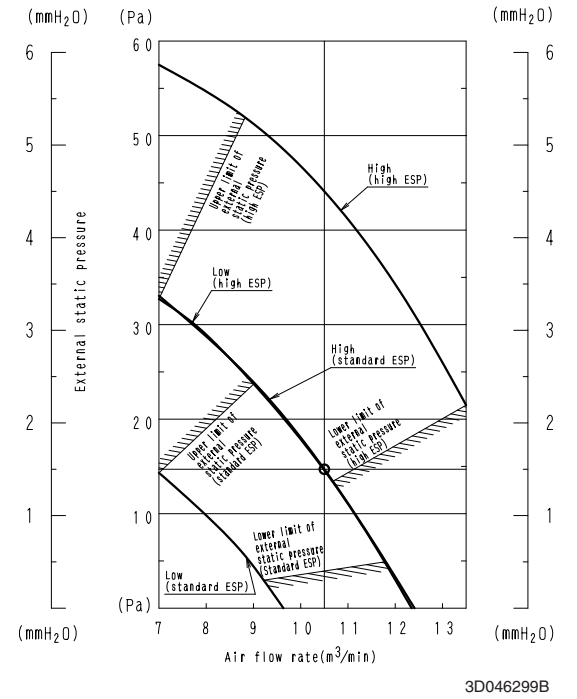

FXDQ50N(A)VE(T)

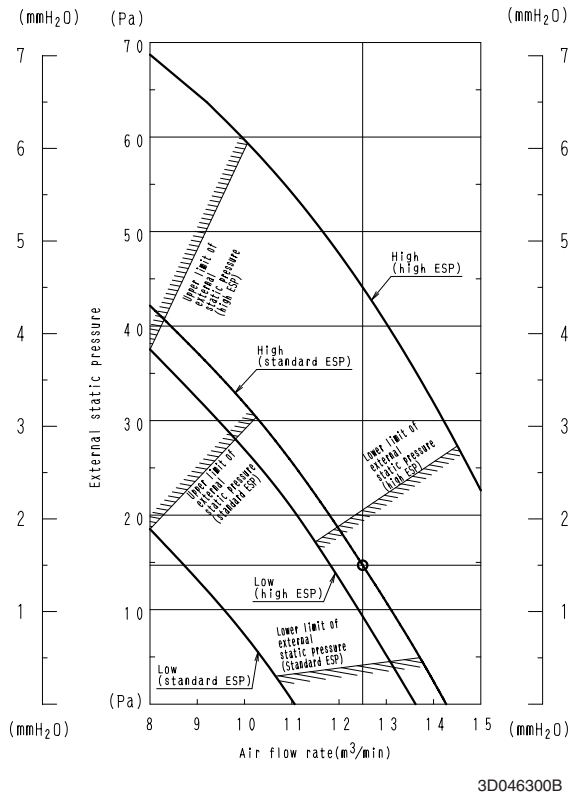

Note:

1. The remote controller can be used to switch between “high” and “low”.
2. The air flow is set to “standard” before leaving the factory.
   It is possible to switch between “standard ESP” and “high ESP” by the remote controller.

FXDQ63N(A)VE(T)

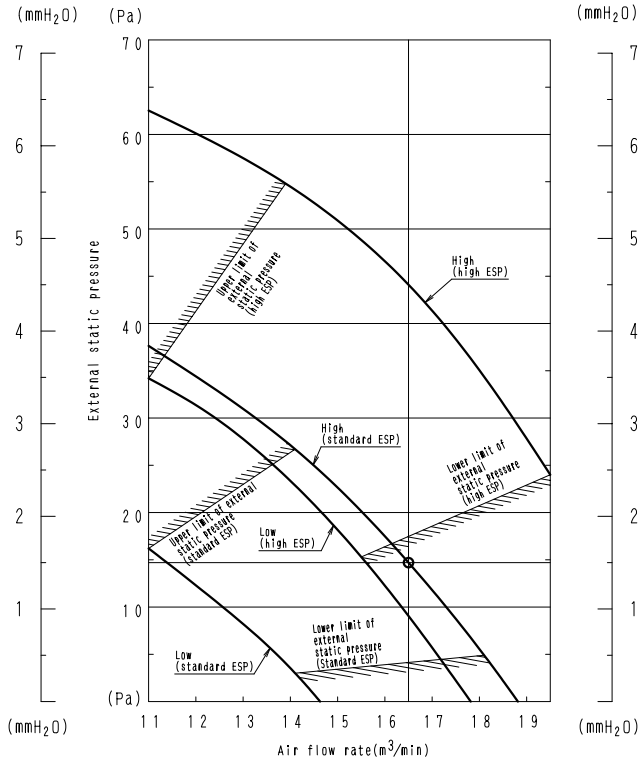

Note:

1. The remote controller can be used to switch between “high” and “low”.
2. The air flow is set to “standard” before leaving the factory.
   It is possible to switch between “standard ESP” and “high ESP” by the remote controller.

9. Sound Levels

9.1 FXDQ-P

Overall

■ **Slim Ceiling Mounted Duct Type**

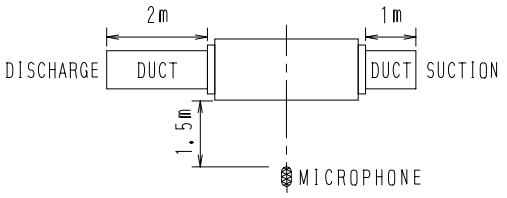

Notes:

1. The operating conditions are assumed to be standard (JIS conditions)
2. These operating values were obtained in a dead room (conversion values).
   Sound level will vary depending on a range of factors such as the construction (acoustic absorption coefficient) of the particular room in which the equipments installed.

dBA

Model	220~240V, 50Hz	
	H	L
FXDQ20PVE(T)	33	29
FXDQ25PVE(T)	33	29
FXDQ32PVE(T)	33	29

Octave Band Level

○——○ 220V~240V 50Hz

FXDQ20PVE(T)

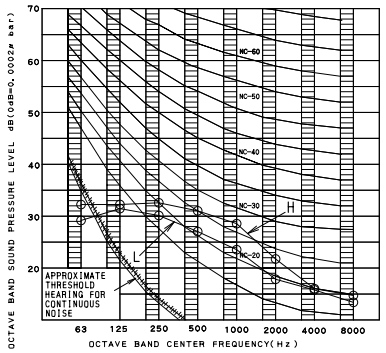

4D052164

FXDQ25PVE(T)

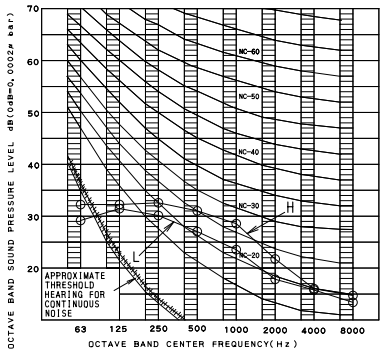

4D052165

FXDQ32PVE(T)

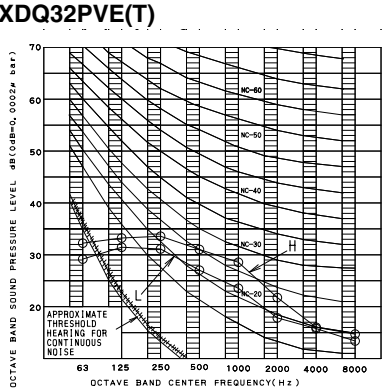

4D052166

9.2 FXDQ-N(A)

Overall

■ **Slim Ceiling Mounted Duct Type**

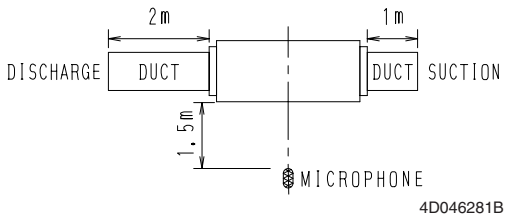

Note:

1. The operating conditions are assumed to be standard (JIS conditions).
2. These operating values were obtained in a dead room (conversion values).
   Sound level will vary depending on a range of factors such as the construction (acoustic absorption coefficient) of the particular room in which the equipments installed.

dBA

Model	220~240V, 50Hz	
	H	L
FXDQ20N(A)VE(T)	33	29
FXDQ25N(A)VE(T)	33	29
FXDQ32N(A)VE(T)	33	29
FXDQ40N(A)VE(T)	34	30
FXDQ50N(A)VE(T)	35	31
FXDQ63N(A)VE(T)	36	32

Octave Band Level

○——○ 220V~240V 50Hz

FXDQ20N(A)VE(T)

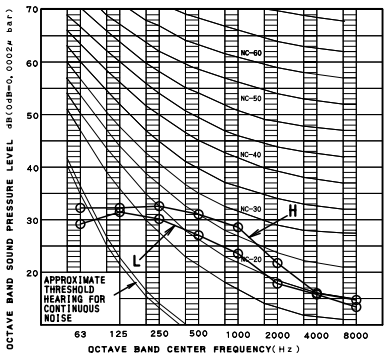

4D046281B

FXDQ25N(A)VE(T)

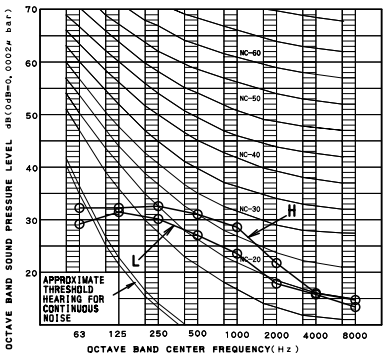

4D046282B

FXDQ32N(A)VE(T)

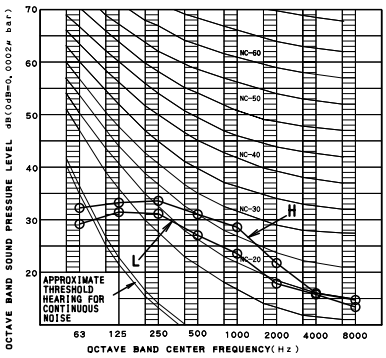

4D046283B

FXDQ40N(A)VE(T)

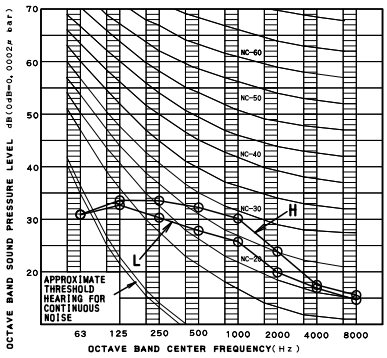

4D046284B

FXDQ50N(A)VE(T)

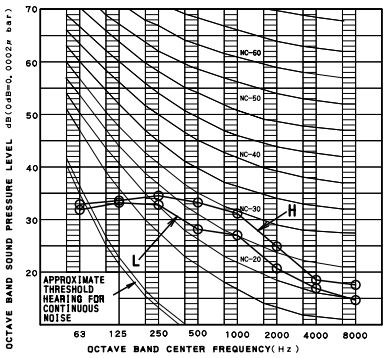

4D046285B

FXDQ63N(A)VE(T)

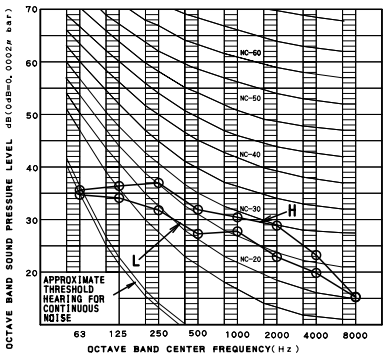

4D046286B

10. Installation

10.1 FXDQ-P

Center of Gravity
FXDQ20P / 25P / 32PVE(T)

Unit (mm)

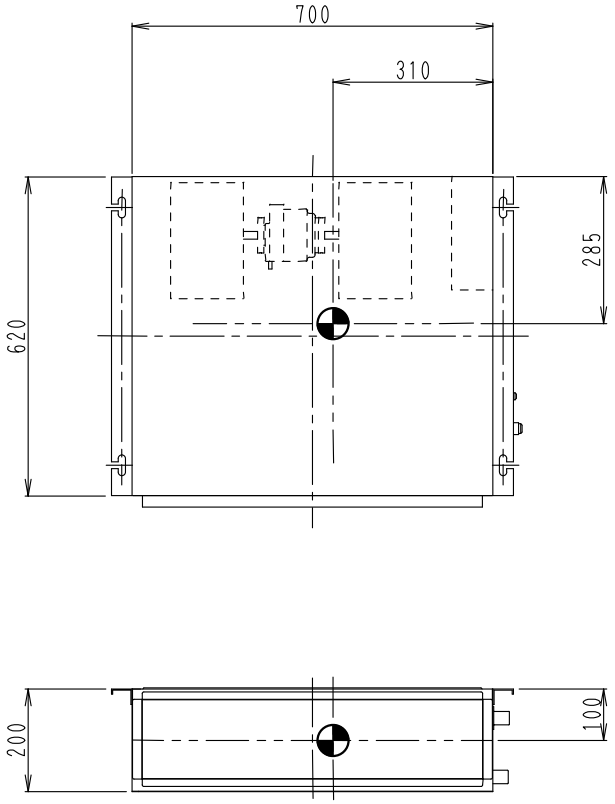

4D049300A

10.2 FXDQ-N(A)

Center of Gravity
FXDQ20 · 25 · 32 · 40 · 50N(A)VE(T)

Unit (mm)

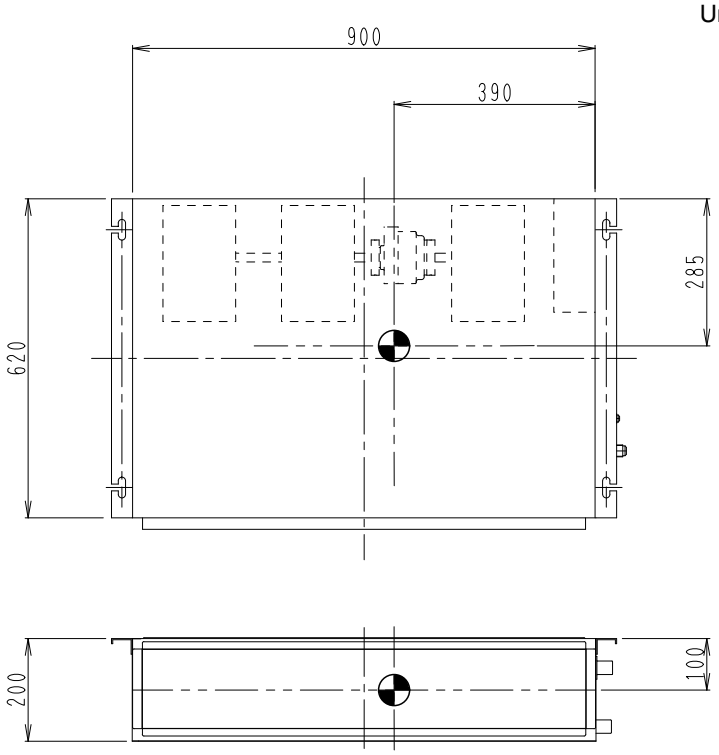

4D043886G

FXDQ63N(A)VE(T)

Unit (mm)

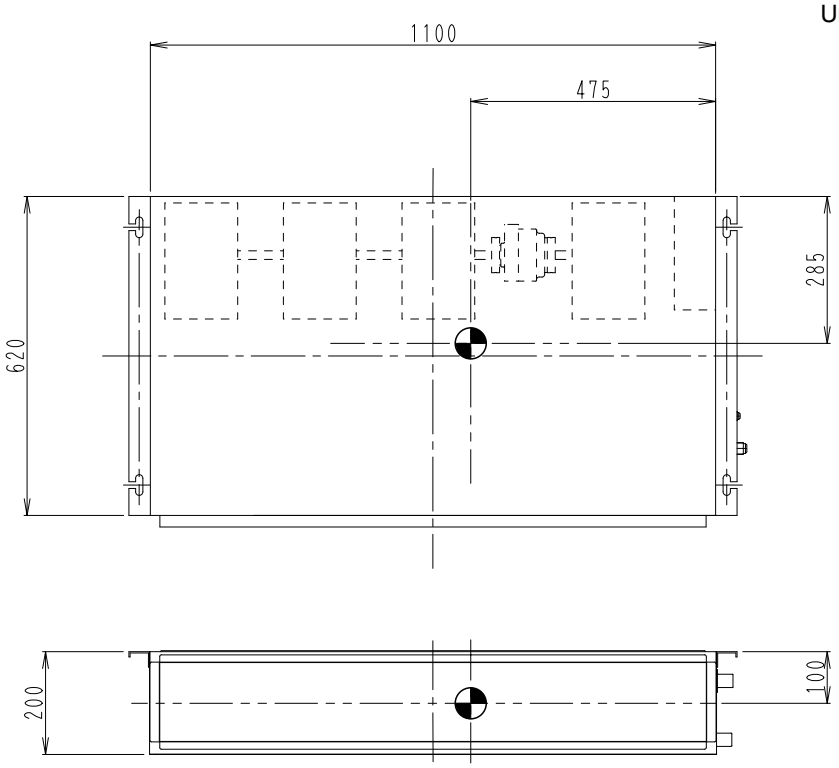

4D043887G

Service Space

1. **Select an installation site where the following conditions are fulfilled and that meets with your customer's approval.**

- Where optimum air distribution can be ensured.
- Where nothing blocks air passage.
- Where condensate can be properly drained.
- Where the ceiling is strong enough to bear the indoor unit weight.
- Where the false ceiling is not noticeably on an incline.
- Where there is no risk of flammable gas leakage.
- Where sufficient clearance for maintenance and service can be ensured. **(Refer to Fig. 1)**
- Where piping between indoor and outdoor units is possible within the allowable limit. (Refer to the installation manual for the outdoor unit.)

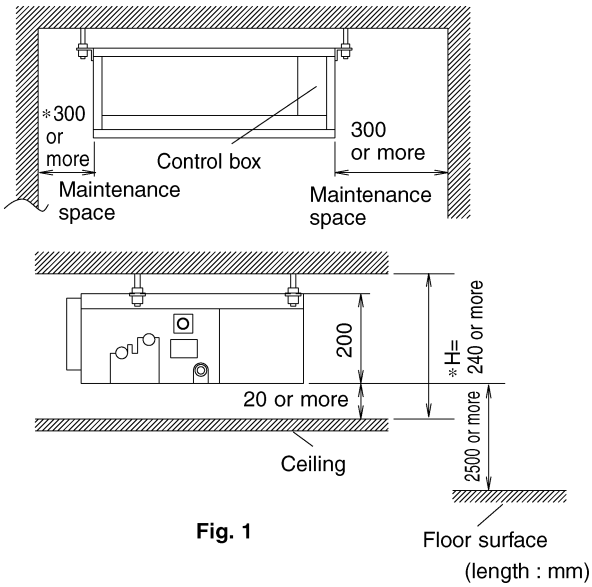

Fig. 1

- Select the ∗H dimension such that a downward slope of at least 1/100 is ensured as indicated in "**DRAIN PIPING WORK**".
- The maintenance space marked with "∗" is required when the installation box for adaptor PC board (KRP1B101) sold separately is used.

[PRECAUTION]

- Install the indoor and outdoor units, power supply wiring and connecting wires at least 1 meter away from televisions or radios in order to prevent image interference or noise. (Depending on the radio waves, a distance of 1 meter may not be sufficient enough to eliminate the noise.)
- If installing the wireless kit in a room with electronic fluorescent lighting (inverter or rapid start type), the remote controller's transmission distance may be shortened. Indoor units should be installed as far away from fluorescent lighting as possible.

2. **Use suspension bolts for installation. Check whether the ceiling is strong enough to support the weight of the unit or not. If there is a risk, reinforce the ceiling before installing the unit.**
   (Installation pitch is marked on the carton box for installation. Refer to it to check for points requiring reinforcing.)

3PN05141-4S

Bolt Pitch

1. **Confirm the positional relationship between the unit and suspension bolts. (Refer to Fig. 2)**

■ Install the inspection opening on the control box side where maintenance and inspection of the control box and drain pump are easy. Install the inspection opening also in the lower part of the unit.

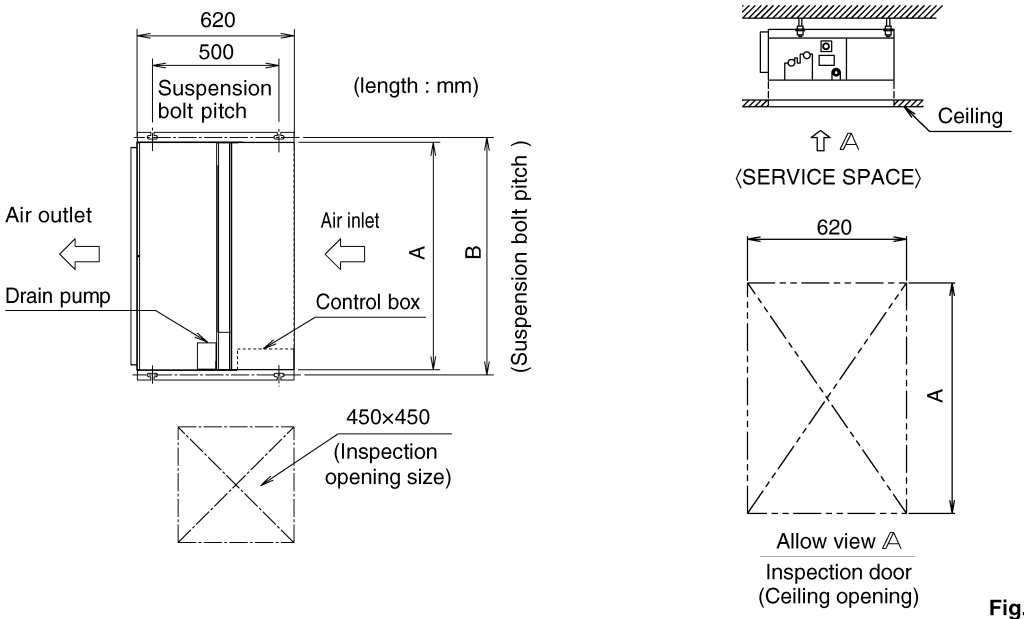

Fig. 2

(length: mm)

Model	A	B
20 · 25 · 32PVE type	700	740
20 · 25 · 32 · 40 · 50N(A) type	900	940
63N(A) type	1100	1140

2. **Make sure the range of the unit's external static pressure is not exceeded.**
   (See the technical documentation for the range of the external static pressure setting.)
3. **Open the installation hole. (Pre-set ceilings)**

■ Once the installation hole is opened in the ceiling where the unit is to be installed, pass refrigerant piping, drain piping, transmission wiring, and remote controller wiring (It is not necessary if using a wireless remote controller) to the unit's piping and wiring holes.
See "**DRAIN PIPING WORK**".

■ After opening the ceiling hole, make sure ceiling is level if needed. It might be necessary to reinforce the ceiling frame to prevent shaking. Consult an architect or carpenter for details.

4. **Install the suspension bolts.**
   (Use W3/8 to M10 suspension bolts.)
   Use a hole-in-anchor for existing ceilings, and a sunken insert, sunken anchor or other part to be procured in the field to reinforce the ceiling to bearing the weight of the unit for new ceiling. (**Refer to Fig. 3**)

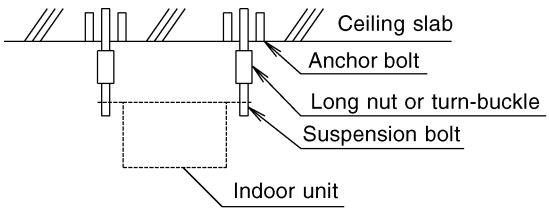

Note: All the above parts are field supplied.

Fig. 3

3PN05141-4S

5. **For bottom intake, replace the chamber lid in the procedure listed in Fig. 4.**

FXDQ-P

For bottom intake, replace the chamber lid and protection net in the procedure listed in Fig. 4.

(1) Remove the protection net. (6 locations)
Remove the chamber lid. (7 locations)

(2) Refer to Fig. 4 for the direction of the chamber lid. (7 locations)
Refer to Fig. 4 for the direction of the protection net. (6 locations)

(3) Attach the air filter (accessory) in the manner shown in the diagram.
The four holes which cannot be covered by the air filter should be covered with commercially available tape.

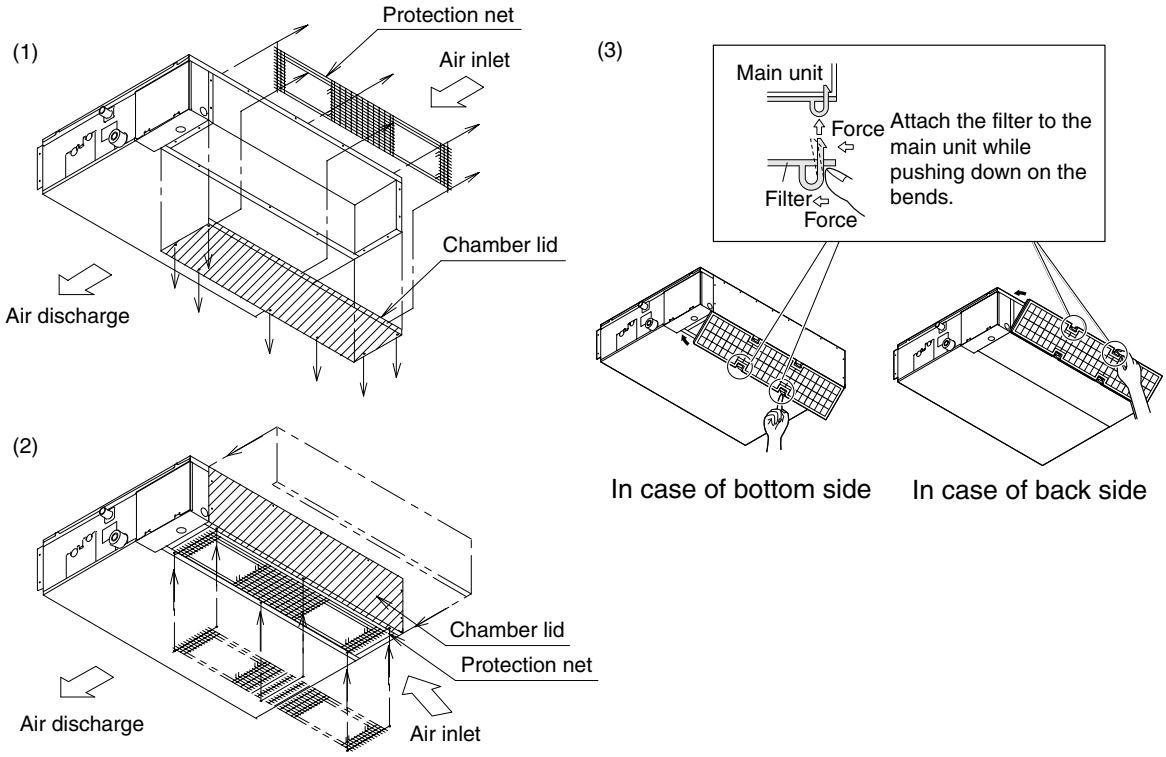

Fig. 4

FXDQ-N(A)

(1) Remove the chamber lid. (7 locations)

(2) Reattached the removed chamber lid in the orientation shown in Fig. 4. (7 locations)

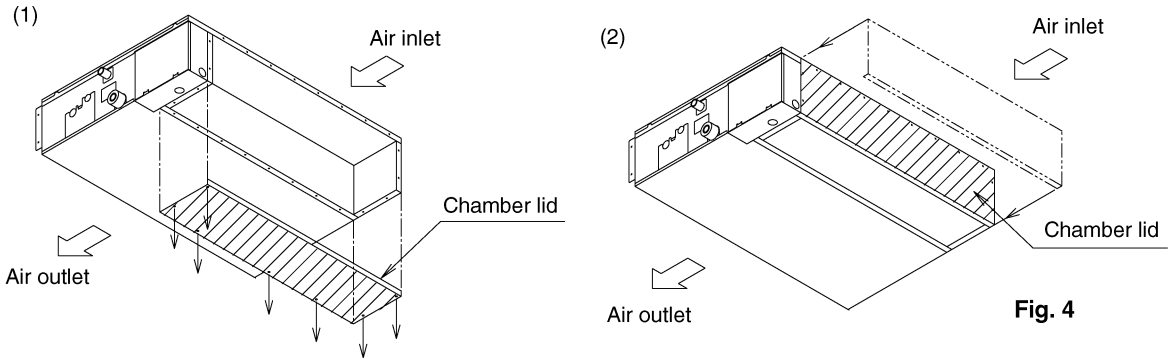

Fig. 4

(3) Attach the air filter (accessory) in the manner shown in the diagram. The four holes which cannot be covered by the air filter should be covered with commercially available tape.

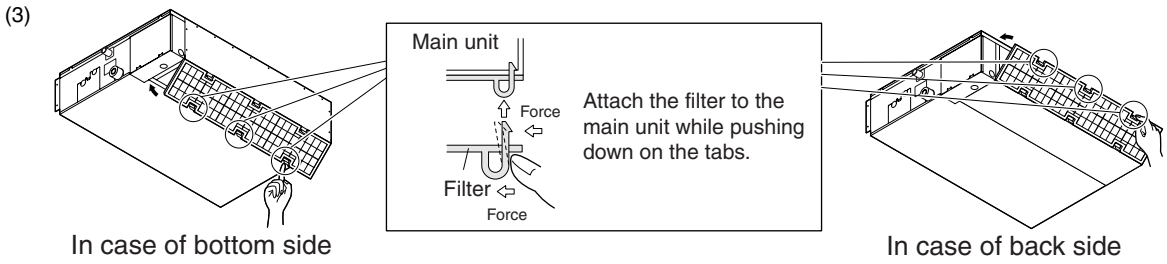

3PN05141-4S

Indoor Unit Installation

<<As for the parts to be used for installation work, be sure to use the provided accessories and specified parts designated by our company.>>

1. Install the indoor unit temporarily.

■ Attach the hanger bracket to the suspension bolt. Be sure to fix it securely by using a nut and washer from the upper and lower sides of the hanger bracket. **(Refer to Fig. 5)**

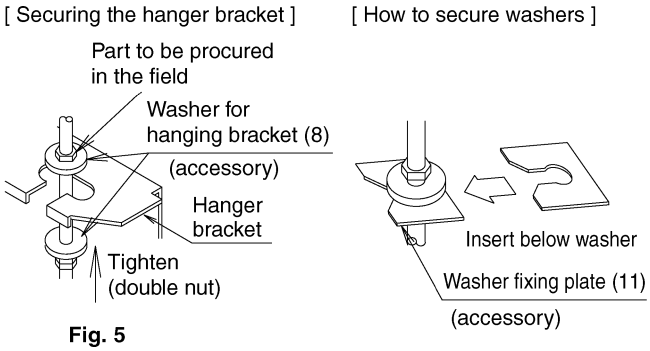

Fig. 5

[PRECAUTION]

Since the unit uses a plastic drain pan, prevent welding spatter and other foreign substances from entering the air outlet during installation.

2. Adjust the height of the unit.

3. Check the unit is level.

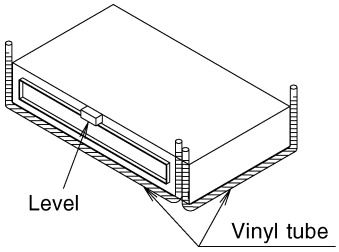

⚠ CAUTION

- **Make sure the unit is installed level using a level or a plastic tube filled with water. In using a plastic tube instead of a level, adjust the top surface of the unit to the surface of the water at both ends of the plastic tube and adjust the unit horizontally. (One thing to watch out for in particular is if the unit is installed so that the slope is not in the direction of the drain piping, this might cause leaking.)**

4. Tighten the upper nut.

3PN05141-4S

Drain Piping Work

1. **Install the drain piping.**

In case of PVE, NAVE (with Drain Pump) Type

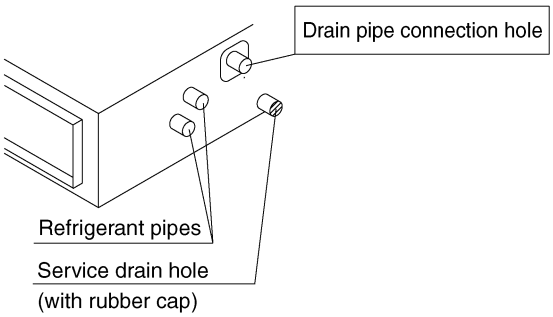

In case of PVET, NVET (without Drain Pump) Type

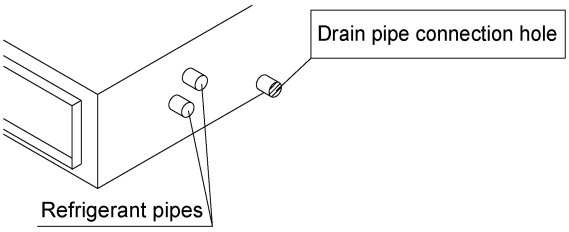

Connect the drain pipe after removing the rubber cap and insulation tubing attached to the connection hole.

- Make sure the drain works properly.
- The diameter of the drain piping should be greater than or equal to the diameter of the connecting pipe (vinyl tube; pipe size: 20 mm; outer dimension: 26 mm).
  (not including the riser)
- Keep the drain pipe short and sloping downwards at a gradient of at least 1/100 to prevent air pockets from forming. **(Refer to Fig. 10)**

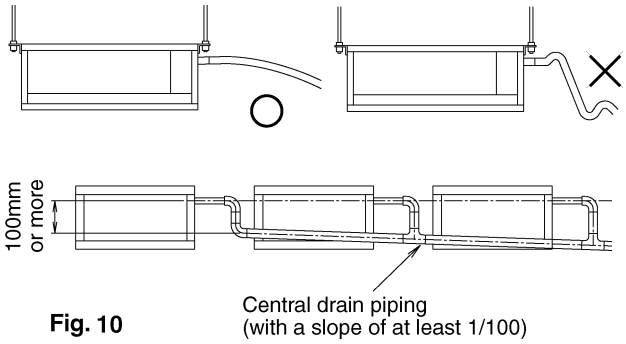

Fig. 10

CAUTION

Water accumulating in the drain piping can cause the drain to clog.

- To keep the drain piping from sagging, space hanging bracket every 1 to 1.5 m.
- Use the drain hose (2) and the metal clamp (1). Insert the drain hose (2) fully into the drain pipe connection hole and firmly tighten the metal clamp (1) with the upper part of the tape on the hose end. Tighten the metal clamp (1) until the screw head is less than 4 mm from the hose. **(Refer to Fig. 11, 12)**
- The two areas below should be insulated because condensation may form there causing water to leak.
  - Drain piping passing indoors
  - Drain pipe connection hole

  Referring the figure below, insulate the metal clamp (1) and drain hose (2) using the included large sealing pad (5). **(Refer to Fig. 12)**

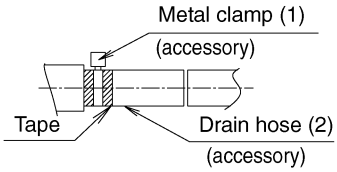

Fig. 11

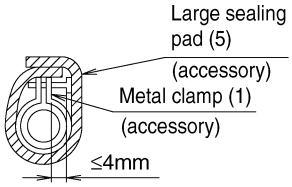

Fig. 12

3PN05141-4S

5

In case of PVE · N(A)VE (with Drain Pump) Type

<PRECAUTIONS FOR DRAIN RAISING PIPE>

- Make sure the drain raising pipe height is no higher than 600mm.
- Place the drain raising pipe vertically and make sure it is no further than 300mm from the unit. **(Refer to Fig. 13)**

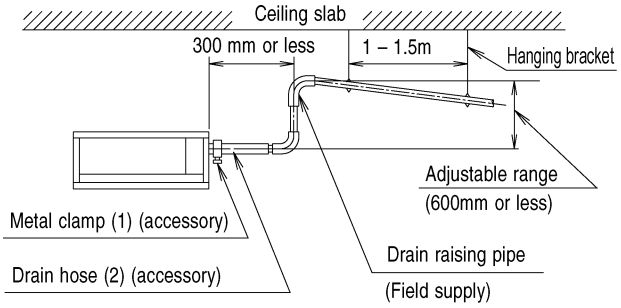

Fig. 13

<PRECAUTIONS>

Drain piping connections

- Do not connect the drain piping directly to sewage pipes that smell of ammonia. The ammonia in the sewage might enter the indoor unit through the drain piping and corrode the heat exchanger.
- Do not twist or bend the drain hose (2), so that excessive force is not applied to it.
  (This type of treatment may cause leaking.)
- If you are using central drain piping, follow the procedure outlined in the figure 10.
- Select central drain piping of proper size according to the capacity of the connected unit.

3PN05141-4S

2. After piping work is finished, check drainage flows smoothly.

- Gradually insert approximately 1L of water into the drain pan to check drainage in the manner described below

In case of PVET · NVET (without Drain Pump) Type

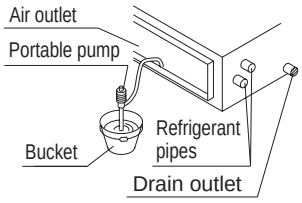

- Gradually pour approximately 1L of water from the outlet hole into the drain pan to check drainage.
- Check the drainage

In case of PVE · N(A)VE (with Drain Pump) Type

CAUTION

- The electric wiring work shall be performed by qualified electricians.
- If workers not having the electrician qualification have performed the electric wiring work, the steps 3 to 7 shall be performed after the **TEST RUN**.

1. Remove the lid of the control box. Connect the remote controller and power supply (single-phase, 50 Hz 220-240 V or single-phase, 60Hz 220V) respectively to the terminal block and securely connect the ground also (as shown in the figure below).

CAUTION

Securely clamp the cables with the clamps (9)(10) offered as accessories as shown in Fig. 14 so that tension will not be applied on the cable connection areas.

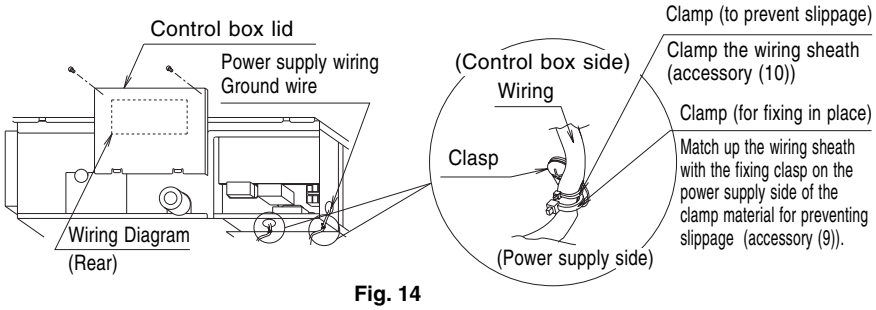

Fig. 14

2. Confirm that the lid of the control box is closed before turning on the power.
3. Remove the inspection lid.
4. Gradually pour approximately 1,000 cc of water from the water inlet into the drain pan to check drainage.

CAUTION

Be sure to prevent an external force from being exerted on the float switch.
(This may cause breakage.)

5. Attach the inspection lid.
6. Perform the following operation using the remote controller, and check drainage.
   - Select the inspection/test operation button " TEST " using the remote controller. The unit will engage the test operation. Press the operation selector button " ", and select FAN OPERATION " ".
   - Press the ON/OFF button " ". (The indoor fan and drain pump will operate.)

CAUTION

The fan will turn also at the same time. Take due care.

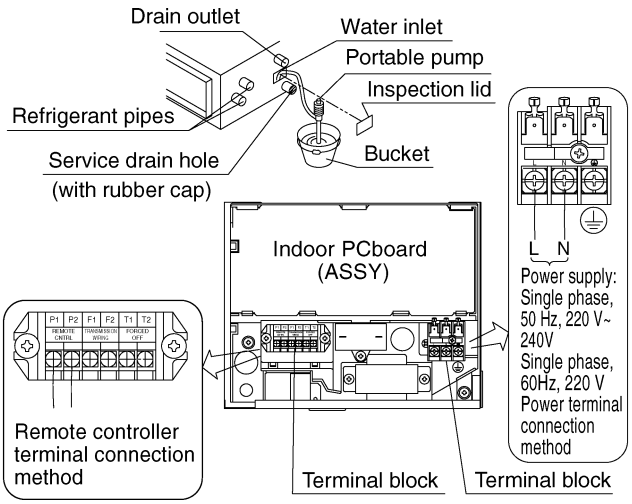

7. Make sure to use the remote controller in finishing the operation.

C : 3PN06588-2C

11. Accessories

Standard Accessories

FXDQ20~63P · N(A)

Name	Metal clamp (1)	Drain hose (2)	Insulation for fitting	Sealing pad	Screws for duct flanges (7)	Washer for hanging bracket (8)	Clamp
Quantity	1 pc.	1 pc.	1 each	1 each	1 set	8 pcs.	1 set
Shape			 for liquid pipe (3)  for gas pipe (4)	 Large (5)  mid. (6)	 24 pcs.		 Large (9) 8 pcs.  small (10) 4 pcs.

Name	Washer fixing plate (11)	Sealing material (12)	Air filter (13)	(Other)
Quantity	4 pcs.	2 pcs.	1 pc.	• Operation manual • Declaration of conformity • Product quality certificate (Only for with Drain Pump type) • Installation manual
Shape	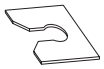		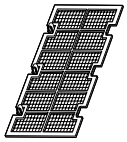	

C : 3PN06583-3B
C : 3PN06583-4D
C : 3PN06588-2C
C : 3PN06583-2B

Optional Accessories (For Unit)

No.	Type / Item	FXDQ20PVET FXDQ25PVET FXDQ32PVET	FXDQ20NVET FXDQ25NVET FXDQ32NVET FXDQ40NVET FXDQ50NVET	FXDQ63NVET
1	Insulation Kit for high humidity	KDT25N32	KDT25N50	KDT25N63

C : 4D051851

Optional Accessories (For Controls) Refer to P.561

KDT25N32 · 50 · 63-Insulation Kit for High Humidity

Dimensions **Unit: mm**

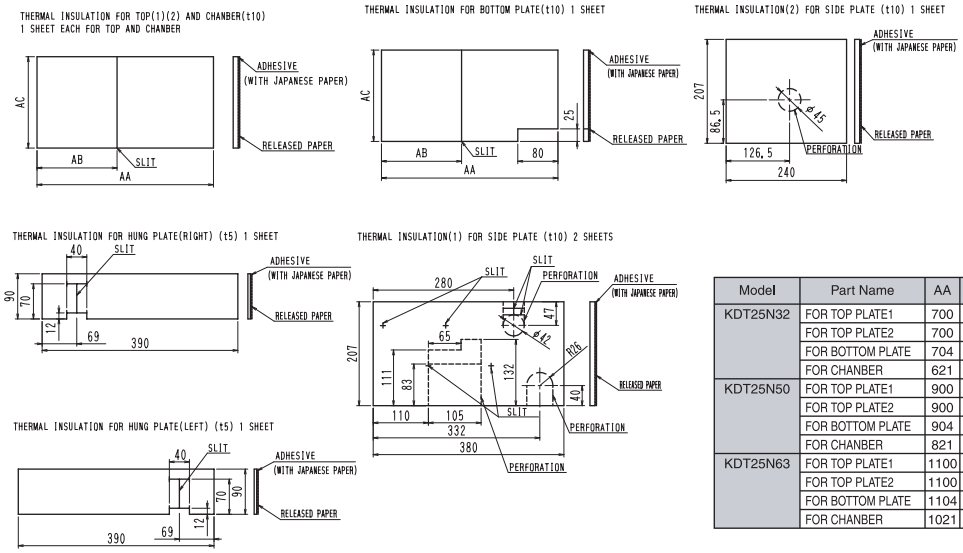

Model	Part Name	AA	AB	AA
KDT25N32	FOR TOP PLATE1	700	350	380
	FOR TOP PLATE2	700	350	240
	FOR BOTTOM PLATE	704	352	420
	FOR CHANBER	621	310	200
KDT25N50	FOR TOP PLATE1	900	450	380
	FOR TOP PLATE2	900	450	240
	FOR BOTTOM PLATE	904	452	420
	FOR CHANBER	821	410	200
KDT25N63	FOR TOP PLATE1	1100	550	380
	FOR TOP PLATE2	1100	550	240
	FOR BOTTOM PLATE	1104	552	420
	FOR CHANBER	1021	510	200

Item \ Model	KDT25N32	KDT25N50	KDT25N63
Material	Foam polyethylene (with Japanese paper)		
Accessories	Installation manual		

FXSQ-M
Ceiling Mounted Built-In Type

1. Features 172
2. Specifications 175
3. Dimensions 178
4. Piping Diagrams 186
5. Wiring Diagrams 187
6. Electric Characteristics 188
7. Capacity Tables 189
   7.1 Cooling Capacity 189
8. Fan Performances 190
   8.1 50Hz 190
9. Sound Levels 191
10. Installation 193
11. Accessories 196

1. Features

A highly flexible air-conditioning system that is adaptable to a wide range of needs, and is designed to facilitate maintenance while providing a high-quality environment.

- Offers freedom of development for the body, outlets and inlets, and wide variety of optional functions, and gives you the freedom to choose the best set-up according to conditions and needs such as interior and layout design, maintenance, etc.

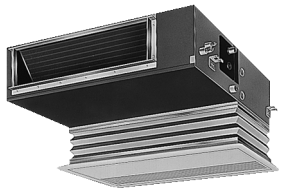

Installation Examples (∗Optional Parts)

●Standard

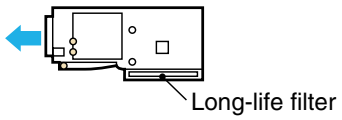

●With duct (case 1)

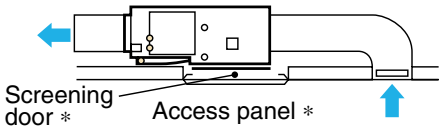

●With duct (case 2)

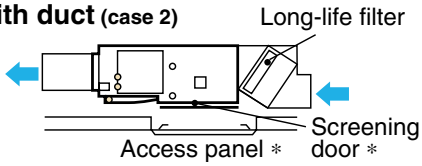

●Cassette style (standard filter)

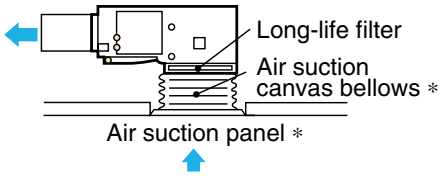

●Cassette style (high efficiency filter)

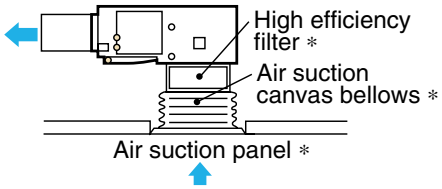

●Ceiling return

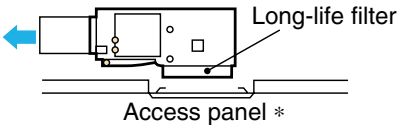

- In addition to regular ducts, layout is unrestricted and design is easy. You can also use flexible ducts that do not require the duct work of regular ducts.

- Offers a selection of nine models ranging from 20 class (equivalent to 0.8 HP) to Maximum 125 class (equivalent to 5 HP).

- All models feature thin design (350 mm height) making them applicable to ceiling pockets that tend to be shallow.

- Set external static pressure in three stages ranging from max. 10 to min. 2 mm H_2O (2 stages, min. 4 mm H_2O for 80 class) according to conditions such as duct height or whether a high-efficiency filter is used, etc.

- Equipped with a programmed drying mechanism that dehumidifies while inhibiting changes in room temperature

- Includes as standard equipment a long-life filter that is maintenance-free for approximately one year. (Treated to mold resistant.)

- Includes as standard equipment drain pump kit that makes possible draining in the upward direction up to 250 mm from the drain pipe opening.

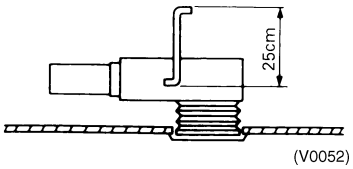

- Quiet-type air-conditioner doesn't destroy the quiet mood of your office.

Capacity	20 type	25 type	32 type	40 type	50 type	63 type	80 type	100 type	125 type
Operating sound (dBA)	37/32	37/32	38/32	38/32	41/36	42/35	43/37	43/37	46/41

- Two types of high-efficiency filters, 65% and 90% (colorimetric method) are available. (Cannot be used if using rear suction type.)

- Suction half panel is thin and unimposing. Ceiling materials adhere to its surface and it provides an excellent finishing touch for the ceiling.

- A wide variety of optional accessories are available such as an auxiliary electric heater (except cooling only).

- If using duct air mounting, please consult with the local fire department for auxiliary heater installation.

Example of Installation (Built-In)

■ Direct installation of half panel

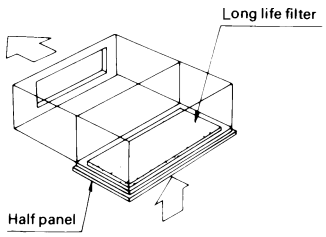

(V0082)

Model		FXSQ20M FXSQ25M FXSQ32M	FXSQ40M FXSQ50M	FXSQ63M	FXSQ80M FXSQ100M FXSQ125M
Necessary Options	Remote Controller	BRC1C62			
	Half Panel	BYBS32DJW1	BYBS45DJW1	BYBS71DJW1	BYBS125DJW1

■ Installation of Half panel and suction canvas

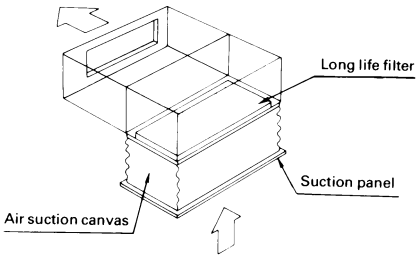

(V0083)

Model		FXSQ20M FXSQ25M FXSQ32M	FXSQ40M FXSQ50M	FXSQ63M	FXSQ80M FXSQ100M FXSQ125M
Necessary Options	Remote Controller	BRC1C62			
	Half Panel	BYBS32DJW1	BYBS45DJW1	BYBS71DJW1	BYBS125DJW1
	Air Suction Canvas	KSA-25K36	KSA-25K56	KSA-25K80	KSA-25L160

■ Installation like ceiling mounted cassette type with High efficiency filter

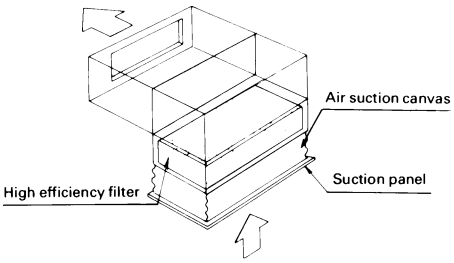

(V0084)

Model			FXSQ20M FXSQ25M FXSQ32M	FXSQ40M FXSQ50M	FXSQ63M	FXSQ80M FXSQ100M FXSQ125M
Necessary Options	Remote Controller		BRC1C62			
	Half Panel		BYBS32DJW1	BYBS45DJW1	BYBS71DJW1	BYBS125DJW1
	High Efficiency Filter	NBS65%	KAFJ252L36	KAFJ252L56	KAFJ252L80	KAFJ252L160
		NBS90%	KAFJ253L36	KAFJ253L56	KAFJ253L80	KAFJ253L160
	Air Suction Canvas		KSA-25K36	KSA-25K56	KSA-25K80	KSA-25L160
	Bottom Suction Filter Chamber		KAJ25L36D	KAJ25L56D	KAJ25L80D	KAJ25L160D

■ Installation with duct (A)

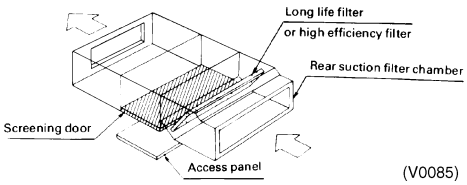

(V0085)

The access panel should be fitted beneath the main body of the unit.

Model			FXSQ20M FXSQ25M FXSQ32M	FXSQ40M FXSQ50M	FXSQ63M	FXSQ80M FXSQ100M FXSQ125M
Necessary Options	Remote Controller		BRC1C62			
	Access Panel		KTBJ25K36W	KTBJ25K56W	KTBJ25K80W	KTBJ25K160W
	Rear Suction Filter Chamber		KAJ25L36B	KAJ25L56B	KAJ25L80B	KAJ25L160B
	Screening Door		KBBJ25K36	KBBJ25K56	KBBJ25K80	KBBJ25K160
	High Efficiency Filter (If Necessary)	NBS65%	KAFJ252L36	KAFJ252L56	KAFJ252L80	KAFJ252L160
		NBS90%	KAFJ253L36	KAFJ253L56	KAFJ253L80	KAFJ253L160

■ Ceiling return

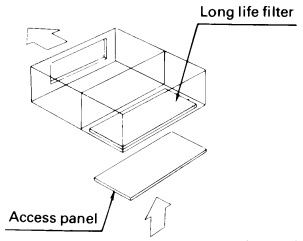

(V0086)

The access panel should be fitted beneath the main body of the unit.

Model		FXSQ20M FXSQ25M FXSQ32M	FXSQ40M FXSQ50M	FXSQ63M	FXSQ80M FXSQ100M FXSQ125M
Necessary Options	Remote Controller	BRC1C62			
	Access Panel	KTBJ25K36W	KTBJ25K56W	KTBJ25K80W	KTBJ25K160W

■ Installation with duct (B)

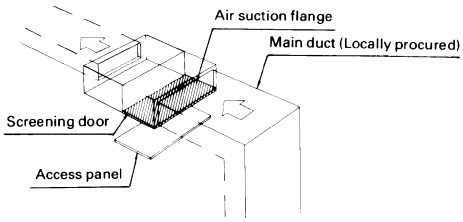

(V0087)

The access panel should be fitted beneath the main body of the unit.

Model		FXSQ20M FXSQ25M FXSQ32M	FXSQ40M FXSQ50M	FXSQ63M	FXSQ80M FXSQ100M FXSQ125M
Necessary Options	Remote Controller	BRC1C62			
	Access Panel	KTBJ25K36W	KTBJ25K56W	KTBJ25K80W	KTBJ25K160W
	Screening Door	KBBJ25K36	KBBJ25K56	KBBJ25K80	KBBJ25K160
	Air Suction Flange	KDJ2507K36	KDJ2507K56	KDJ2507K80	KDJ2507K160

2. Specifications

Ceiling Mounted Built-In Type

Model				FXSQ20MVE	FXSQ25MVE	FXSQ32MVE
∗1 Cooling Capacity (19.5°CWB)			kcal/h	2,000	2,500	3,200
			Btu/h	7,800	9,900	12,600
			kW	2.3	2.9	3.7
∗2 Cooling Capacity (19.0°CWB)			kW	2.2	2.8	3.6
Casing				Galvanized Steel Plate	Galvanized Steel Plate	Galvanized Steel Plate
Dimensions: (H×W×D)			mm	300×550×800	300×550×800	300×550×800
Coil (Cross Fin Coil)	Rows×Stages×Fin Pitch		mm	3×14×1.75	3×14×1.75	3×14×1.75
	Face Area		m²	0.088	0.088	0.088
Fan	Model			D18H3A	D18H3A	D18H3A
	Type			Sirocco Fan	Sirocco Fan	Sirocco Fan
	Motor Output × Number of Units		W	50×1	50×1	50×1
	Air Flow Rate (H/L)	50 Hz	m³/min	9/6.5	9/6.5	9.5/7
			cfm	318/230	318/230	335/247
	∗3 External Static Pressure	50 Hz	Pa	88-39-20	88-39-20	64-39-15
	Drive			Direct Drive	Direct Drive	Direct Drive
Temperature Control				Microprocessor Thermostat for Cooling and Heating	Microprocessor Thermostat for Cooling and Heating	Microprocessor Thermostat for Cooling and Heating
Sound Absorbing Thermal Insulation Material				Glass Fiber	Glass Fiber	Glass Fiber
Air Filter				Resin Net (with Mold Resistant)	Resin Net (with Mold Resistant)	Resin Net (with Mold Resistant)
Piping Connections	Liquid Pipes		mm	ϕ6.4 (Flare Connection)	ϕ6.4 (Flare Connection)	ϕ6.4 (Flare Connection)
	Gas Pipes		mm	ϕ12.7 (Flare Connection)	ϕ12.7 (Flare Connection)	ϕ12.7 (Flare Connection)
	Drain Pipe		mm	VP25 (External Dia. 32 Internal Dia. 25)	VP25 (External Dia. 32 Internal Dia. 25)	VP25 (External Dia. 32 Internal Dia. 25)
Machine Weight (Mass)			kg	30	30	30
∗5 Sound Level (H/L) (220V)			dBA	37/32	37/32	38/32
Safety Devices				Fuse. Thermal Protector for Fan Motor.	Fuse. Thermal Protector for Fan Motor.	Fuse. Thermal Protector for Fan Motor.
Refrigerant Control				Electronic Expansion Valve	Electronic Expansion Valve	Electronic Expansion Valve
Connectable Outdoor Unit				R-410A P Series	R-410A P Series	R-410A P Series
Decoration Panel (Option)	Model			BYBS32DJW1	BYBS32DJW1	BYBS32DJW1
	Panel Color			White (10Y9/0.5)	White (10Y9/0.5)	White (10Y9/0.5)
	Dimensions: (H×W×D)		mm	55×650×500	55×650×500	55×650×500
	Weight		kg	3	3	3
Standard Accessories				Operation Manual. Installation Manual. Paper Pattern for Installation. Drain Hose. Clamp Metal. Insulation for Fitting. Sealing Pads. Clamps. Screws. Washers.	Operation Manual. Installation Manual. Paper Pattern for Installation. Drain Hose. Clamp Metal. Insulation for Fitting. Sealing Pads. Clamps. Screws. Washers.	Operation Manual. Installation Manual. Paper Pattern for Installation. Drain Hose. Clamp Metal. Insulation for Fitting. Sealing Pads. Clamps. Screws. Washers.
Drawing No.				C : 3D039431		

Note:

∗1 Indoor temp. : 27°CDB, 19.5°CWB / outdoor temp. : 35°CDB / Equivalent piping length : 7.5 m, level difference : 0 m.
∗2 Indoor temp. : 27°CDB, 19.0°CWB / outdoor temp. : 35°CDB / Equivalent piping length : 7.5 m, level difference : 0 m.
∗3 External static pressure is changeable to change over the connectors inside electrical box, this pressure means "High static pressure-Standard -Low static pressure".
4 Capacities are net, including a deduction for cooling (an additional for heating) for indoor fan motor heat.
∗5 Anechoic chamber conversion value, measured at a point 1.5 m downward from the unit center. These values are normally somewhat higher during actual operation as a result of ambient conditions.
6 Refer to page 188 for Fan Motor Input.

Conversion Formulae
kcal/h=kW×860 Btu/h=kW×3412 cfm=m³/min×35.3

Ceiling Mounted Built-In Type

Model				FXSQ40MVE	FXSQ50MVE	FXSQ63MVE
∗1 Cooling Capacity (19.5°CWB)			kcal/h	4,000	5,000	6,300
			Btu/h	16,000	19,800	24,900
			kW	4.7	5.8	7.3
∗2 Cooling Capacity (19.0°CWB)			kW	4.5	5.6	7.1
Casing				Galvanized Steel Plate	Galvanized Steel Plate	Galvanized Steel Plate
Dimensions: (H×W×D)			mm	300×700×800	300×700×800	300×1,000×800
Coil (Cross Fin Coil)	Rows×Stages×Fin Pitch		mm	3×14×1.75	3×14×1.75	3×14×1.75
	Face Area		m²	0.132	0.132	0.221
Fan	Model			D18H2A	D18H2A	2D18H2A
	Type			Sirocco Fan	Sirocco Fan	Sirocco Fan
	Motor Output × Number of Units		W	65×1	85×1	125×1
	Air Flow Rate (H/L)	50 Hz	m³/min	11.5/9	15/11	21/15.5
			cfm	406/318	530/388	741/547
	∗3 External Static Pressure	50 Hz	Pa	88-49-20	88-59-29	88-49-20
	Drive			Direct Drive	Direct Drive	Direct Drive
Temperature Control				Microprocessor Thermostat for Cooling and Heating	Microprocessor Thermostat for Cooling and Heating	Microprocessor Thermostat for Cooling and Heating
Sound Absorbing Thermal Insulation Material				Glass Fiber	Glass Fiber	Glass Fiber
Air Filter				Resin Net (with Mold Resistant)	Resin Net (with Mold Resistant)	Resin Net (with Mold Resistant)
Piping Connections	Liquid Pipes		mm	ϕ6.4 (Flare Connection)	ϕ6.4 (Flare Connection)	ϕ9.5 (Flare Connection)
	Gas Pipes		mm	ϕ12.7 (Flare Connection)	ϕ12.7 (Flare Connection)	ϕ15.9 (Flare Connection)
	Drain Pipe		mm	VP25 (External Dia. 32 Internal Dia. 25)	VP25 (External Dia. 32 Internal Dia. 25)	VP25 (External Dia. 32 Internal Dia. 25)
Machine Weight (Mass)			kg	30	31	41
∗5 Sound Level (H/L) (220V)			dBA	38/32	41/36	42/35
Safety Devices				Fuse. Thermal Protector for Fan Motor.	Fuse. Thermal Protector for Fan Motor.	Fuse. Thermal Protector for Fan Motor.
Refrigerant Control				Electronic Expansion Valve	Electronic Expansion Valve	Electronic Expansion Valve
Connectable Outdoor Unit				R-410A P Series	R-410A P Series	R-410A P Series
Decoration Panel (Option)	Model			BYBS45DJW1	BYBS45DJW1	BYBS71DJW1
	Panel Color			White (10Y9/0.5)	White (10Y9/0.5)	White (10Y9/0.5)
	Dimensions: (H×W×D)		mm	55×800×500	55×800×500	55×1,100×500
	Weight		kg	3.5	3.5	4.5
Standard Accessories				Operation Manual. Installation Manual. Paper Pattern for Installation. Drain Hose. Clamp Metal. Insulation for Fitting. Sealing Pads. Clamps. Screws. Washers.	Operation Manual. Installation Manual. Paper Pattern for Installation. Drain Hose. Clamp Metal. Insulation for Fitting. Sealing Pads. Clamps. Screws. Washers.	Operation Manual. Installation Manual. Paper Pattern for Installation. Drain Hose. Clamp Metal. Insulation for Fitting. Sealing Pads. Clamps. Screws. Washers.
Drawing No.				C : 3D039431		

Note:

∗1 Indoor temp. : 27°CDB, 19.5°CWB / outdoor temp. : 35°CDB / Equivalent piping length : 7.5 m, level difference : 0 m.
∗2 Indoor temp. : 27°CDB, 19.0°CWB / outdoor temp. : 35°CDB / Equivalent piping length : 7.5 m, level difference : 0 m.
∗3 External static pressure is changeable to change over the connectors inside electrical box, this pressure means "High static pressure-Standard -Low static pressure".
4 Capacities are net, including a deduction for cooling (an additional for heating) for indoor fan motor heat.
∗5 Anechoic chamber conversion value, measured at a point 1.5 m downward from the unit center. These values are normally somewhat higher during actual operation as a result of ambient conditions.
6 Refer to page 188 for Fan Motor Input.

Conversion Formulae
kcal/h=kW×860 Btu/h=kW×3412 cfm=m³/min×35.3

Ceiling Mounted Built-In Type

Model				FXSQ80MVE	FXSQ100MVE	FXSQ125MVE
∗1 Cooling Capacity (19.5°CWB)			kcal/h	8,000	10,000	12,500
			Btu/h	31,700	39,600	49,500
			kW	9.3	11.6	14.5
∗2 Cooling Capacity (19.0°CWB)			kW	9.0	11.2	14.0
Casing				Galvanized Steel Plate	Galvanized Steel Plate	Galvanized Steel Plate
Dimensions: (H×W×D)			mm	300×1,400×800	300×1,400×800	300×1,400×800
Coil (Cross Fin Coil)	Rows×Stages×Fin Pitch		mm	3×14×1.75	3×14×1.75	3×14×1.75
	Face Area		m²	0.338	0.338	0.338
Fan	Model			3D18H2A	3D18H2A	3D18H2A
	Type			Sirocco Fan	Sirocco Fan	Sirocco Fan
	Motor Output × Number of Units		W	225×1	225×1	225×1
	Air Flow Rate (H/L)	50 Hz	m³/min	27/21.5	28/22	38/28
			cfm	953/759	988/777	1,341/988
	∗3 External Static Pressure	50 Hz	Pa	113-82	107-75	78-39
	Drive			Direct Drive	Direct Drive	Direct Drive
Temperature Control				Microprocessor Thermostat for Cooling and Heating	Microprocessor Thermostat for Cooling and Heating	Microprocessor Thermostat for Cooling and Heating
Sound Absorbing Thermal Insulation Material				Glass Fiber	Glass Fiber	Glass Fiber
Air Filter				Resin Net (with Mold Resistant)	Resin Net (with Mold Resistant)	Resin Net (with Mold Resistant)
Piping Connections	Liquid Pipes		mm	ϕ9.5 (Flare Connection)	ϕ9.5 (Flare Connection)	ϕ9.5 (Flare Connection)
	Gas Pipes		mm	ϕ15.9 (Flare Connection)	ϕ15.9 (Flare Connection)	ϕ15.9 (Flare Connection)
	Drain Pipe		mm	VP25 (External Dia. 32 Internal Dia. 25)	VP25 (External Dia. 32 Internal Dia. 25)	VP25 (External Dia. 32 Internal Dia. 25)
Machine Weight (Mass)			kg	51	51	52
∗5 Sound Level (H/L) (220V)			dBA	43/37	43/37	46/41
Safety Devices				Fuse. Thermal Protector for Fan Motor.	Fuse. Thermal Protector for Fan Motor.	Fuse. Thermal Protector for Fan Motor.
Refrigerant Control				Electronic Expansion Valve	Electronic Expansion Valve	Electronic Expansion Valve
Connectable Outdoor Unit				R-410A P Series	R-410A P Series	R-410A P Series
Decoration Panel (Option)	Model			BYBS125DJW1	BYBS125DJW1	BYBS125DJW1
	Panel Color			White (10Y9/0.5)	White (10Y9/0.5)	White (10Y9/0.5)
	Dimensions: (H×W×D)		mm	55×1,500×500	55×1,500×500	55×1,500×500
	Weight		kg	6.5	6.5	6.5
Standard Accessories				Operation Manual. Installation Manual. Paper Pattern for Installation. Drain Hose. Clamp Metal. Insulation for Fitting. Sealing Pads. Clamps. Screws. Washers.	Operation Manual. Installation Manual. Paper Pattern for Installation. Drain Hose. Clamp Metal. Insulation for Fitting. Sealing Pads. Clamps. Screws. Washers.	Operation Manual. Installation Manual. Paper Pattern for Installation. Drain Hose. Clamp Metal. Insulation for Fitting. Sealing Pads. Clamps. Screws. Washers.
Drawing No.				C : 3D039431		

Note:

∗1 Indoor temp. : 27°CDB, 19.5°CWB / outdoor temp. : 35°CDB / Equivalent piping length : 7.5 m, level difference : 0 m.
∗2 Indoor temp. : 27°CDB, 19.0°CWB / outdoor temp. : 35°CDB / Equivalent piping length : 7.5 m, level difference : 0 m.
∗3 External static pressure is changeable to change over the connectors inside electrical box, this pressure means "High static pressure-Standard".
4 Capacities are net, including a deduction for cooling (an additional for heating) for indoor fan motor heat.
∗5 Anechoic chamber conversion value, measured at a point 1.5 m downward from the unit center. These values are normally somewhat higher during actual operation as a result of ambient conditions.
6 Refer to page 188 for Fan Motor Input.

Conversion Formulae
kcal/h=kW×860 Btu/h=kW×3412 cfm=m³/min×35.3

3. Dimensions

FXSQ20M + BYBS32DJW1 (With Canvas Duct)
FXSQ25M + BYBS32DJW1 (With Canvas Duct)
FXSQ32M + BYBS32DJW1 (With Canvas Duct)

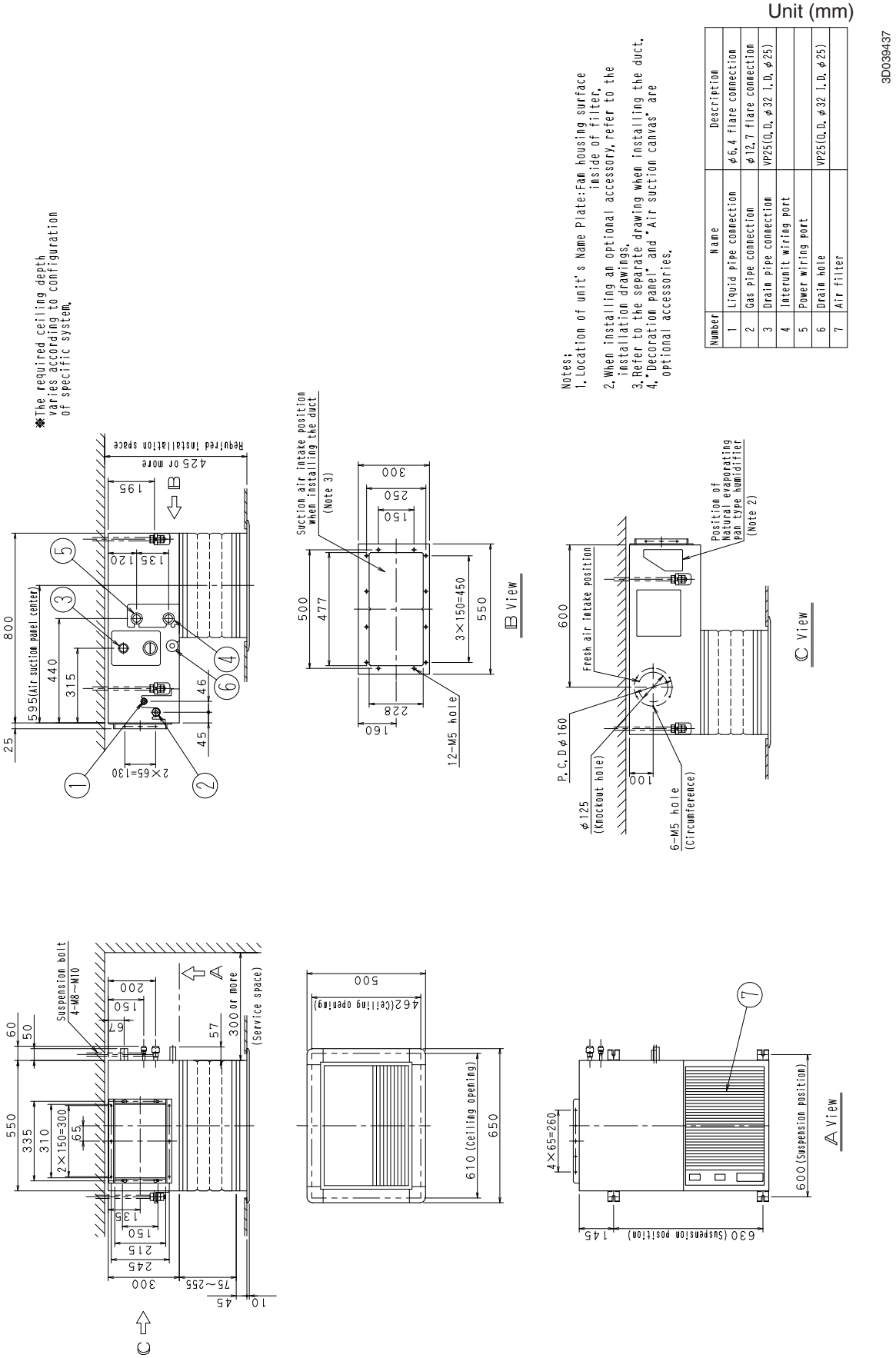

Notes;
1. Location of unit's Name Plate:Fan housing surface inside of filter.
2. When installing an optional accessory, refer to the installation drawings.
3. Refer to the separate drawing when installing the duct.
4. "Decoration panel" and "Air suction canvas" are optional accessories.

Number	Name	Description
1	Liquid pipe connection	φ6.4 flare connection
2	Gas pipe connection	φ12.7 flare connection
3	Drain pipe connection	VP25(O.D. φ32 I.D. φ25)
4	Interunit wiring port	
5	Power wiring port	
6	Drain hole	VP25(O.D. φ32 I.D. φ25)
7	Air filter	

FXSQ40M + BYBS45DJW1 (With Canvas Duct)
FXSQ50M + BYBS45DJW1 (With Canvas Duct)

Unit (mm)

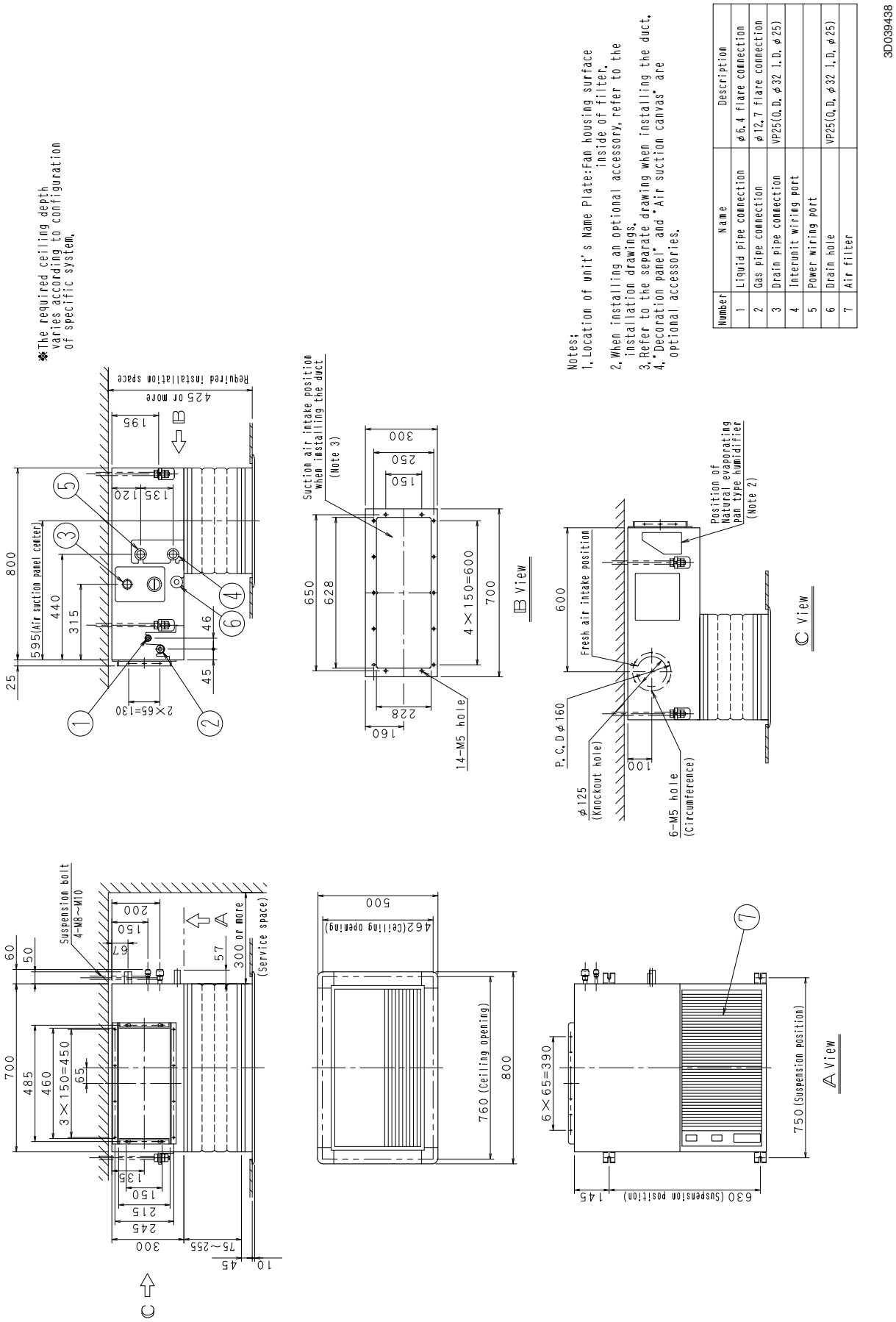

Notes:
1. Location of unit's Name Plate:Fan housing surface inside of filter.
2. When installing an optional accessory, refer to the installation drawings.
3. Refer to the separate drawing when installing the duct.
4. "Decoration panel" and "Air suction canvas" are optional accessories.

Number	Name	Description
1	Liquid pipe connection	φ6.4 flare connection
2	Gas pipe connection	φ12.7 flare connection
3	Drain pipe connection	VP25(O.D. φ32 I.D. φ25)
4	Interunit wiring port	
5	Power wiring port	
6	Drain hole	VP25(O.D. φ32 I.D. φ25)
7	Air filter	

3D039438

6

FXSQ63M + BYBS71DJW1 (With Canvas Duct)

Unit (mm)

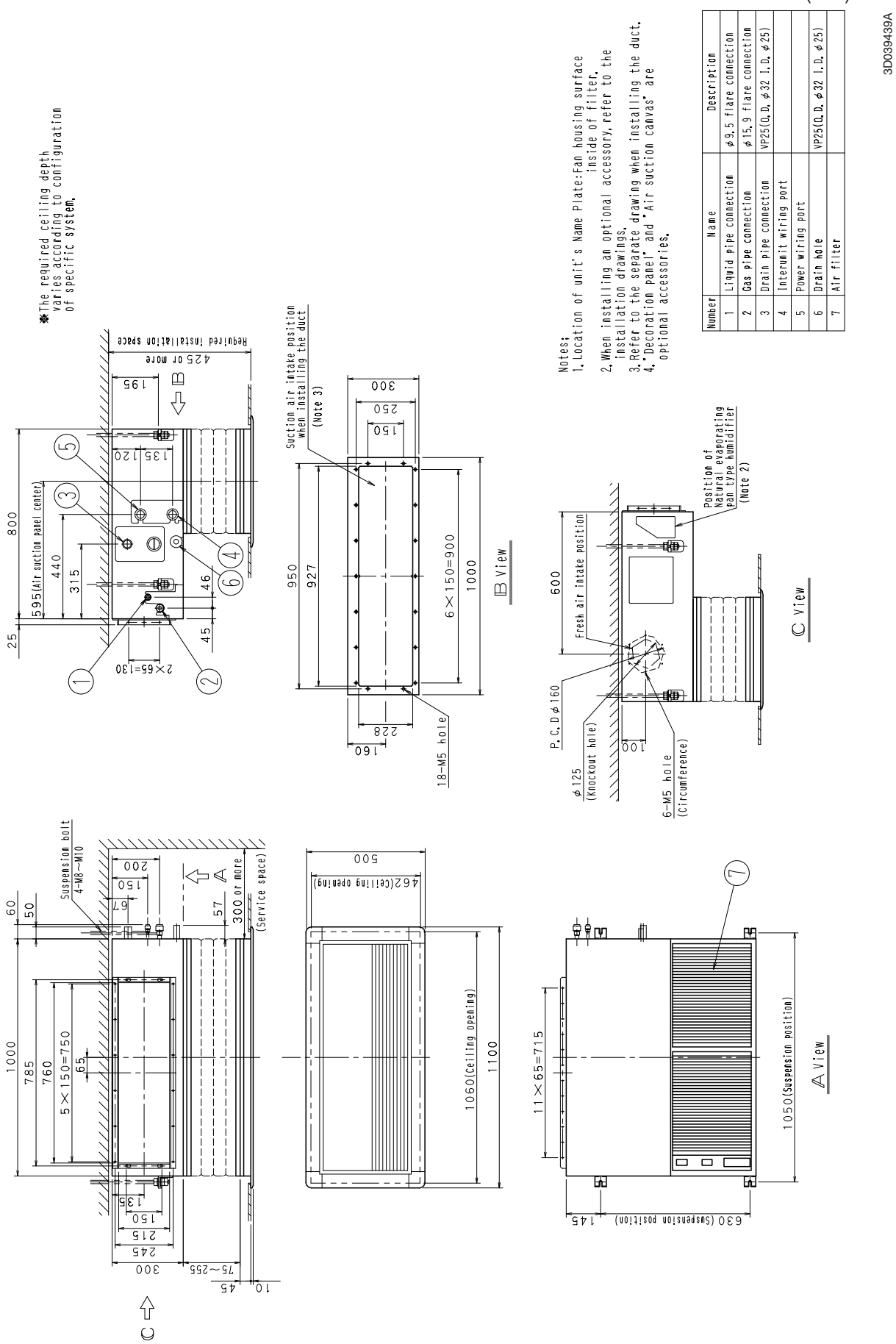

Notes;
1. Location of unit's Name Plate:Fan housing surface inside of filter.
2. When installing an optional accessory, refer to the installation drawings.
3. Refer to the separate drawing when installing the duct.
4. "Decoration panel" and "Air suction canvas" are optional accessories.

Number	Name	Description
1	Liquid pipe connection	φ9.5 flare connection
2	Gas pipe connection	φ15.9 flare connection
3	Drain pipe connection	VP25(O.D. φ32 I.D. φ25)
4	Interunit wiring port	
5	Power wiring port	
6	Drain hole	VP25(O.D. φ32 I.D. φ25)
7	Air filter	

3D039439A

FXSQ80M + BYBS125DJW1 (With Canvas Duct)
FXSQ100M + BYBS125DJW1 (With Canvas Duct)
FXSQ125M + BYBS125DJW1 (With Canvas Duct)

Unit (mm)

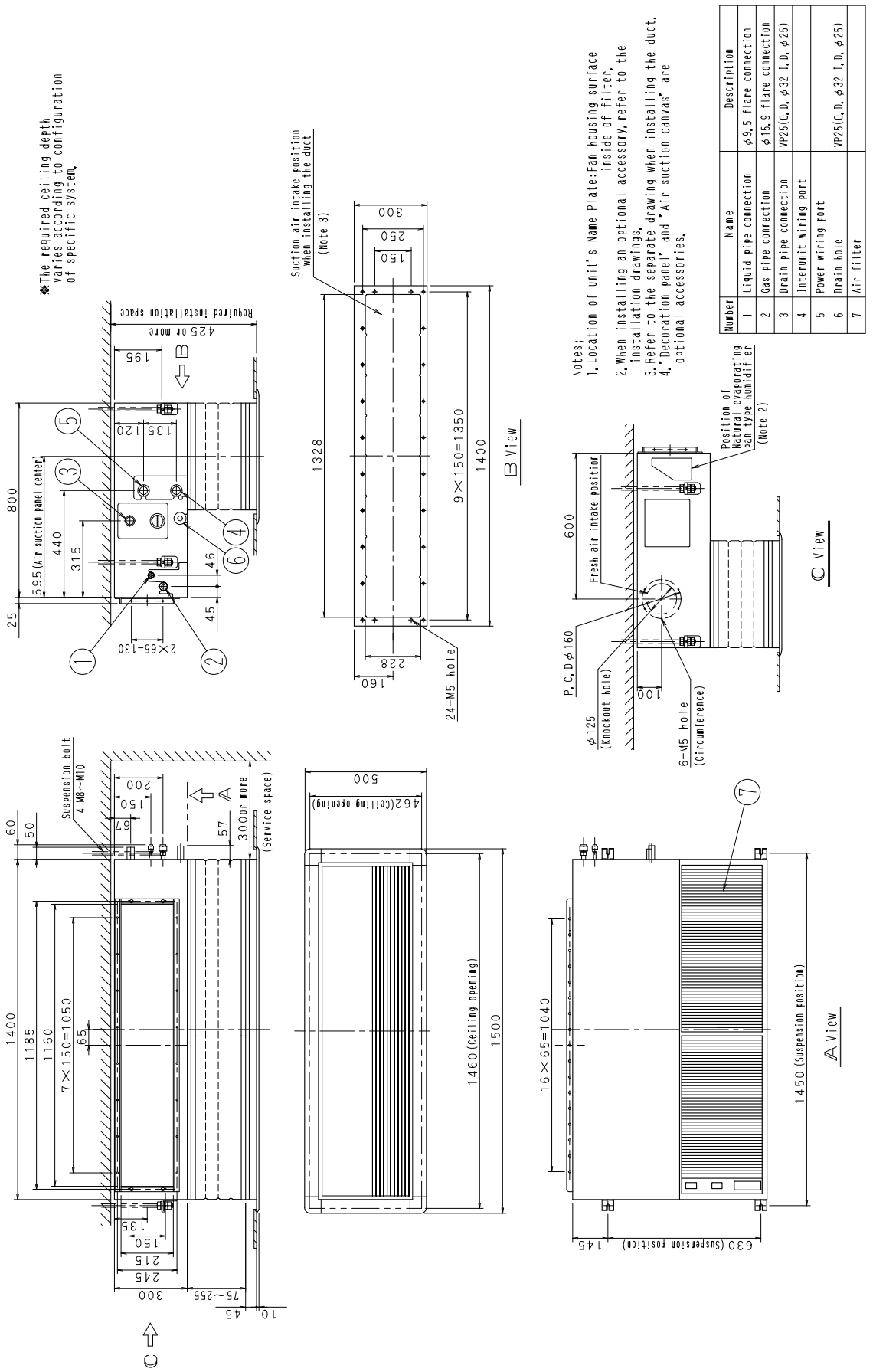

Number	Name	Description
1	Liquid pipe connection	φ9.5 flare connection
2	Gas pipe connection	φ15.9 flare connection
3	Drain pipe connection	VP25(O.D. φ32 I.D. φ25)
4	Interunit wiring port	
5	Power wiring port	
6	Drain hole	VP25(O.D. φ32 I.D. φ25)
7	Air filter	

FXSQ20M + BYBS32DJW1 (Without Canvas Duct)
FXSQ25M + BYBS32DJW1 (Without Canvas Duct)
FXSQ32M + BYBS32DJW1 (Without Canvas Duct)

Unit (mm)

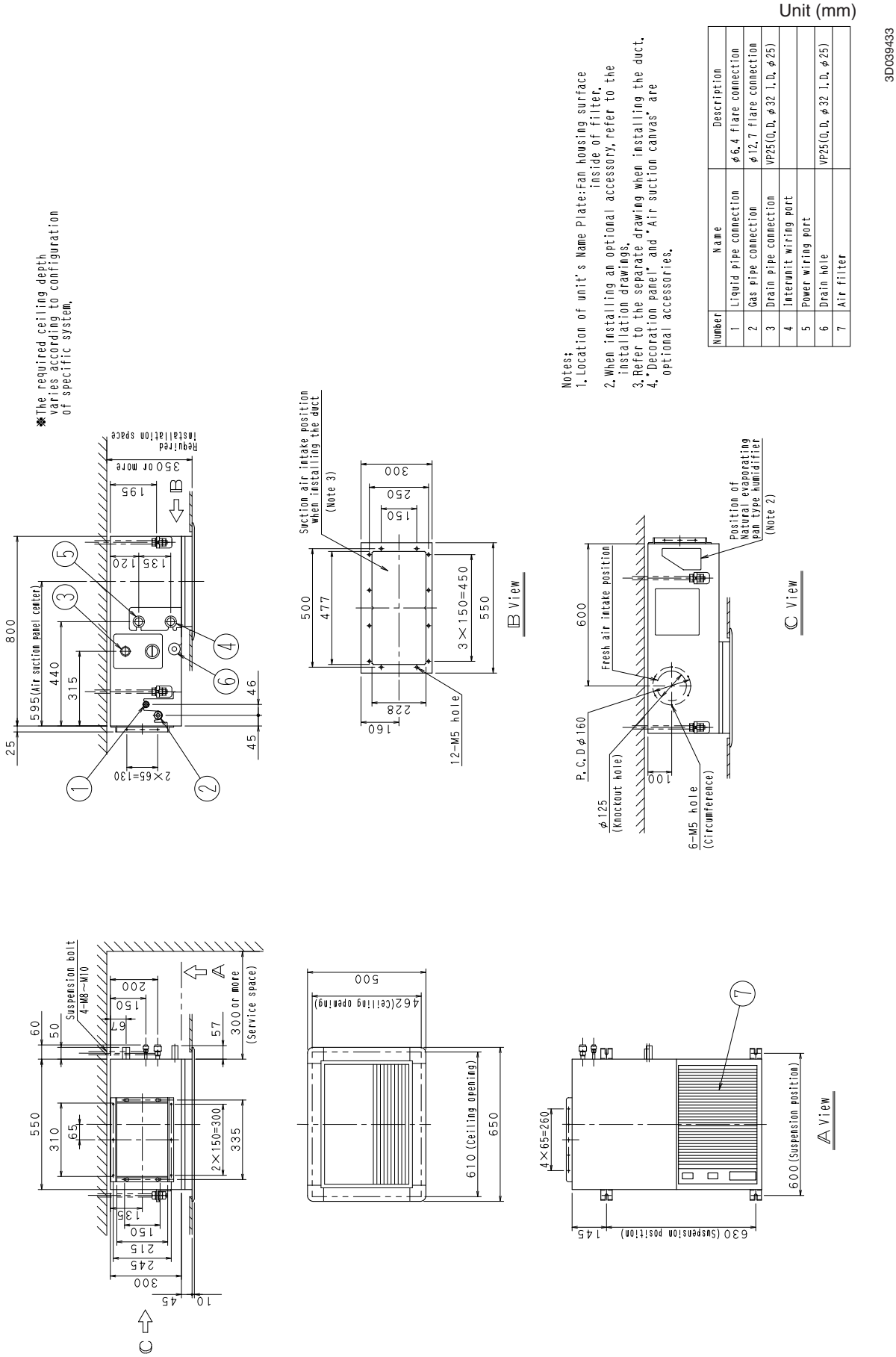

Notes:
1. Location of unit's Name Plate: Fan housing surface inside of filter.
2. When installing an optional accessory, refer to the installation drawings.
3. Refer to the separate drawing when installing the duct.
4. "Decoration panel" and "Air suction canvas" are optional accessories.

Number	Name	Description
1	Liquid pipe connection	φ6.4 flare connection
2	Gas pipe connection	φ12.7 flare connection
3	Drain pipe connection	VP25(O.D. φ32 I.D. φ25)
4	Interunit wiring port	
5	Power wiring port	
6	Drain hole	VP25(O.D. φ32 I.D. φ25)
7	Air filter	

3D039433

FXSQ40M + BYBS45DJW1 (Without Canvas Duct)
FXSQ50M + BYBS45DJW1 (Without Canvas Duct)

Unit (mm)

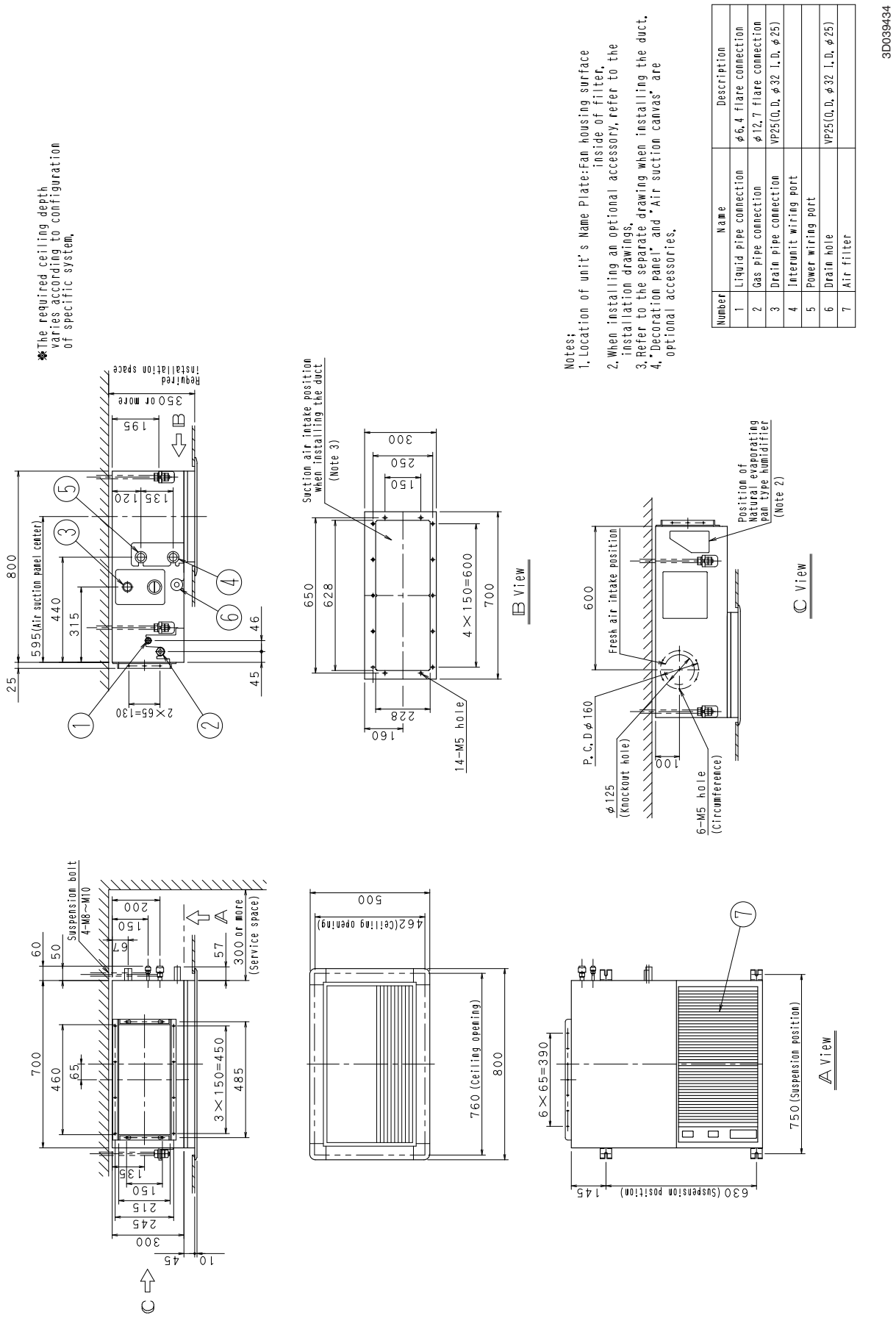

Notes;
1. Location of unit's Name Plate:Fan housing surface inside of filter.
2. When installing an optional accessory, refer to the installation drawings.
3. Refer to the separate drawing when installing the duct.
4. "Decoration panel" and "Air suction canvas" are optional accessories.

Number	Name	Description
1	Liquid pipe connection	φ6.4 flare connection
2	Gas pipe connection	φ12.7 flare connection
3	Drain pipe connection	VP25(O.D. φ32 I.D. φ25)
4	Interunit wiring port	
5	Power wiring port	
6	Drain hole	VP25(O.D. φ32 I.D. φ25)
7	Air filter	

3D039434

6

FXSQ63M + BYBS71DJW1 (Without Canvas Duct)

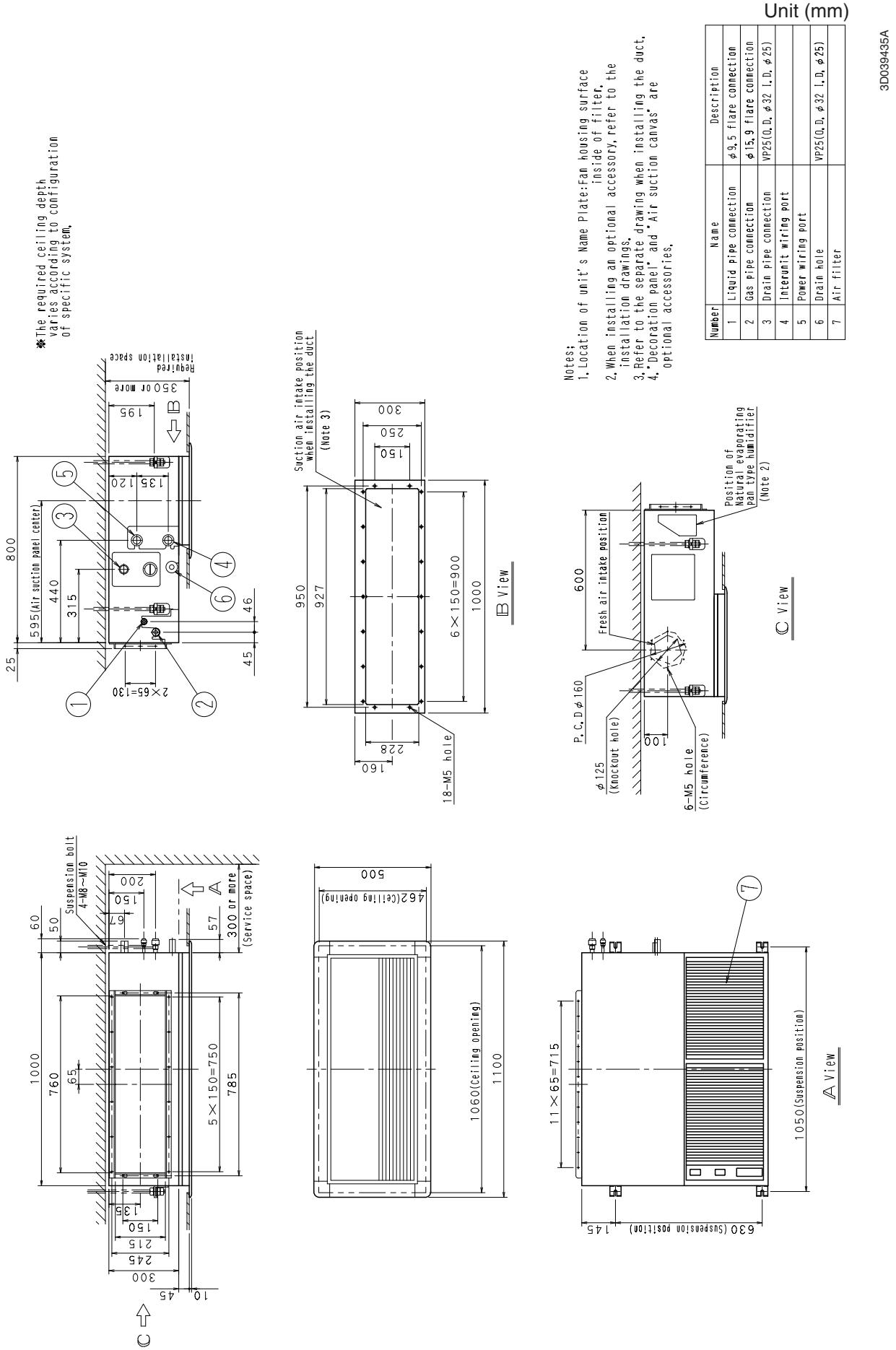

Notes:
1. Location of unit's Name Plate: Fan housing surface inside of filter.
2. When installing an optional accessory, refer to the installation drawings.
3. Refer to the separate drawing when installing the duct.
4. "Decoration panel" and "Air suction canvas" are optional accessories.

Number	Name	Description
1	Liquid pipe connection	φ9.5 flare connection
2	Gas pipe connection	φ15.9 flare connection
3	Drain pipe connection	VP25(O.D. φ32 I.D. φ25)
4	Interunit wiring port	
5	Power wiring port	
6	Drain hole	VP25(O.D. φ32 I.D. φ25)
7	Air filter	

FXSQ80M + BYBS125DJW1 (Without Canvas Duct)
FXSQ100M + BYBS125DJW1 (Without Canvas Duct)
FXSQ125M + BYBS125DJW1 (Without Canvas Duct)

Unit (mm)

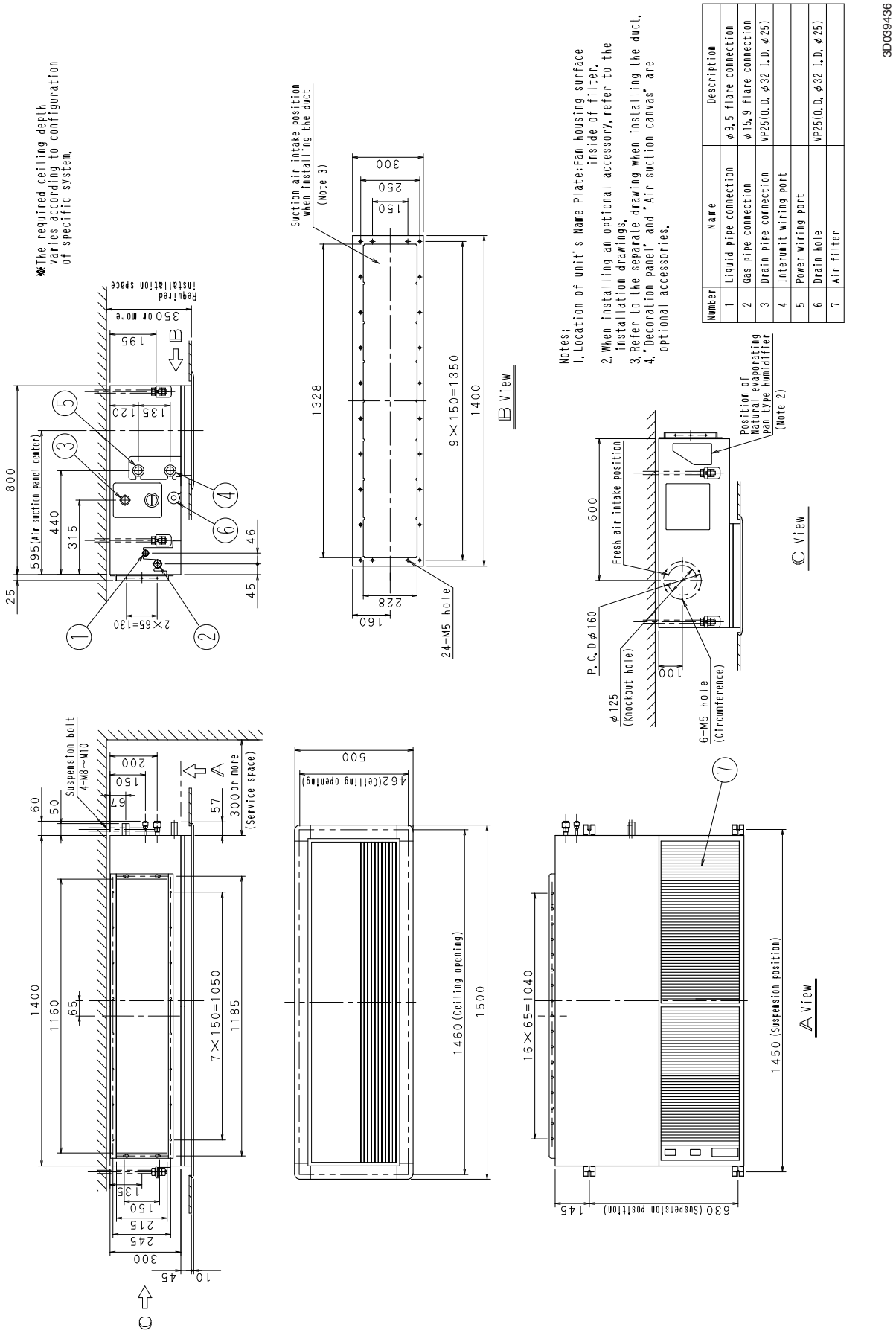

Number	Name	Description
1	Liquid pipe connection	φ9.5 flare connection
2	Gas pipe connection	φ15.9 flare connection
3	Drain pipe connection	VP25(O.D. φ32 I.D. φ25)
4	Interunit wiring port	
5	Power wiring port	
6	Drain hole	VP25(O.D. φ32 I.D. φ25)
7	Air filter	

3D039436

6

4. Piping Diagrams

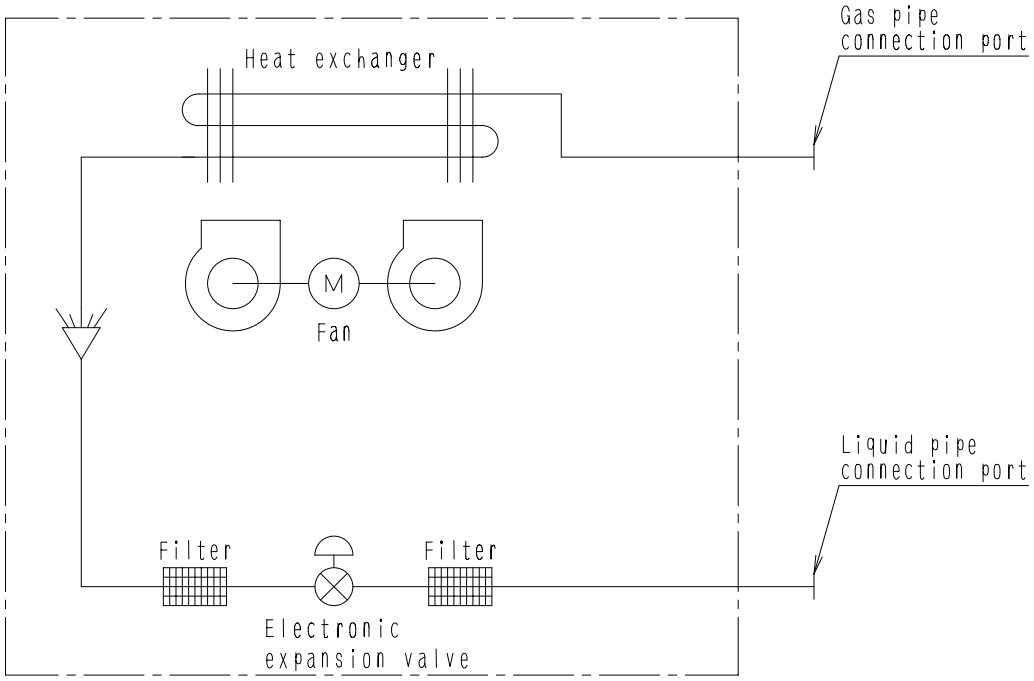

4D034245C

■ **Refrigerant pipe connection port diameters**

(mm)

Model	Gas	Liquid
FXSQ20 · 25 · 32 · 40 · 50M	ϕ12.7	ϕ6.4
FXSQ63 · 80 · 100 · 125M	ϕ15.9	ϕ9.5

5. Wiring Diagrams

FXSQ20 · 25 · 32 · 40 · 50 · 63 · 80 · 100 · 125MVE

3D039561B

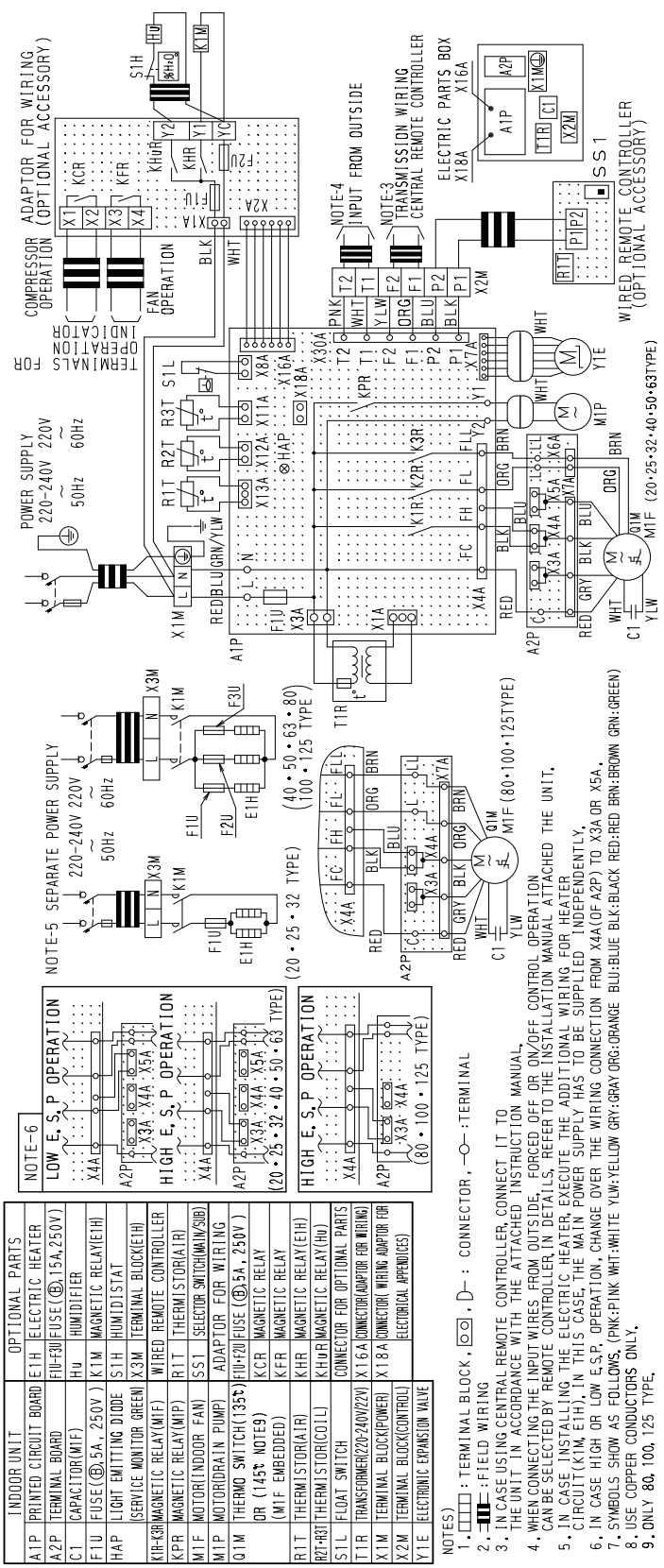

6. Electric Characteristics

Units					Power supply		IFM		Input(W)	
Model	Type	Hz	Volts	Voltage range	MCA	MFA	KW	FLA	Cooling	Heating
FXSQ20M	VE	50	220-240	MAX. 264 Min. 198	0.5	15	0.05	0.4	110	90
FXSQ25M					0.5	15	0.05	0.4	110	90
FXSQ32M					0.5	15	0.05	0.4	114	94
FXSQ40M					0.6	15	0.065	0.5	127	107
FXSQ50M					0.9	15	0.085	0.7	143	123
FXSQ63M					1.1	15	0.125	0.9	189	169
FXSQ80M					1.4	15	0.225	1.1	234	214
FXSQ100M					1.5	15	0.225	1.2	242	222
FXSQ125M					2.0	15	0.225	1.6	321	301

Symbols:

MCA : Min. Circuit Amps (A)
MFA : Max. Fuse Amps (See note 5)
KW : Fan Motor Rated Output(KW)
FLA : Full Load Amps(A)
IFM : Indoor Fan Motor

Note:

1. Voltage range

   Units are suitable for use on electrical systems where voltage supplied to unit terminals is not below or above listed range limits.

2. Maximum allowable voltage unbalance between phases is 2%.

3. MCA/MFA

   MCA = 1.25 X FLA

   MFA ≦ 4 X FLA

   (Next lower standard fuse rating. Min.15A)

4. Select wire size based on the MCA.

5. Instead of fuse, use Circuit Breaker.

C : 4D036936A

7. Capacity Tables

7.1 Cooling Capacity

FXSQ-M [50Hz]

Cooling capacity

Unit Size	Outdoor air temp. °CDB	Indoor air temp. 14.0°CWB 20°CDB TC	SC	16.0°CWB 23°CDB TC	SC	18.0°CWB 26°CDB TC	SC	19.0°CWB 27°CDB TC	SC	20.0°CWB 28°CDB TC	SC	22.0°CWB 30°CDB TC	SC	24.0°CWB 32°CDB TC	SC
20	10.0	1.5	1.4	1.8	1.6	2.1	1.7	2.2	1.8	2.3	1.9	2.6	1.9	2.9	1.9
	12.0	1.5	1.4	1.8	1.6	2.1	1.7	2.2	1.8	2.3	1.9	2.6	1.9	2.9	1.9
	14.0	1.5	1.4	1.8	1.6	2.1	1.7	2.2	1.8	2.3	1.9	2.6	1.9	2.8	1.9
	16.0	1.5	1.4	1.8	1.6	2.1	1.7	2.2	1.8	2.3	1.9	2.6	1.9	2.8	1.8
	18.0	1.5	1.4	1.8	1.6	2.1	1.7	2.2	1.8	2.3	1.9	2.6	1.9	2.7	1.8
	20.0	1.5	1.4	1.8	1.6	2.1	1.7	2.2	1.8	2.3	1.9	2.6	1.9	2.7	1.8
	21.0	1.5	1.4	1.8	1.6	2.1	1.7	2.2	1.8	2.3	1.9	2.6	1.9	2.7	1.8
	23.0	1.5	1.4	1.8	1.6	2.1	1.7	2.2	1.8	2.3	1.9	2.6	1.9	2.6	1.7
	25.0	1.5	1.4	1.8	1.6	2.1	1.7	2.2	1.8	2.3	1.9	2.6	1.8	2.6	1.7
	27.0	1.5	1.4	1.8	1.6	2.1	1.7	2.2	1.8	2.3	1.9	2.5	1.8	2.6	1.7
	29.0	1.5	1.4	1.8	1.6	2.1	1.7	2.2	1.8	2.3	1.9	2.5	1.8	2.5	1.7
	31.0	1.5	1.4	1.8	1.6	2.1	1.7	2.2	1.8	2.3	1.9	2.4	1.8	2.5	1.7
	33.0	1.5	1.4	1.8	1.6	2.1	1.7	2.2	1.8	2.3	1.9	2.4	1.8	2.5	1.7
	35.0	1.5	1.4	1.8	1.6	2.1	1.7	2.2	1.8	2.3	1.8	2.4	1.8	2.4	1.7
	37.0	1.5	1.4	1.8	1.6	2.1	1.7	2.2	1.8	2.3	1.8	2.3	1.8	2.4	1.7
	39.0	1.5	1.4	1.8	1.6	2.1	1.7	2.2	1.8	2.2	1.8	2.3	1.7	2.3	1.6
25	10.0	1.9	1.7	2.3	1.9	2.6	2.0	2.8	2.1	3.0	2.2	3.4	2.3	3.7	2.3
	12.0	1.9	1.7	2.3	1.9	2.6	2.0	2.8	2.1	3.0	2.2	3.4	2.3	3.6	2.2
	14.0	1.9	1.7	2.3	1.9	2.6	2.0	2.8	2.1	3.0	2.2	3.4	2.3	3.6	2.2
	16.0	1.9	1.7	2.3	1.9	2.6	2.0	2.8	2.1	3.0	2.2	3.4	2.3	3.5	2.2
	18.0	1.9	1.7	2.3	1.9	2.6	2.0	2.8	2.1	3.0	2.2	3.4	2.3	3.5	2.2
	20.0	1.9	1.7	2.3	1.9	2.6	2.0	2.8	2.1	3.0	2.2	3.4	2.3	3.4	2.1
	21.0	1.9	1.7	2.3	1.9	2.6	2.0	2.8	2.1	3.0	2.2	3.4	2.3	3.4	2.1
	23.0	1.9	1.7	2.3	1.9	2.6	2.0	2.8	2.1	3.0	2.2	3.3	2.2	3.4	2.1
	25.0	1.9	1.7	2.3	1.9	2.6	2.0	2.8	2.1	3.0	2.2	3.3	2.2	3.3	2.1
	27.0	1.9	1.7	2.3	1.9	2.6	2.0	2.8	2.1	3.0	2.2	3.2	2.2	3.3	2.1
	29.0	1.9	1.7	2.3	1.9	2.6	2.0	2.8	2.1	3.0	2.2	3.2	2.2	3.2	2.0
	31.0	1.9	1.7	2.3	1.9	2.6	2.0	2.8	2.1	3.0	2.2	3.1	2.1	3.2	2.0
	33.0	1.9	1.7	2.3	1.9	2.6	2.0	2.8	2.1	3.0	2.2	3.1	2.1	3.1	2.0
	35.0	1.9	1.7	2.3	1.9	2.6	2.0	2.8	2.1	3.0	2.2	3.0	2.1	3.1	2.0
	37.0	1.9	1.7	2.3	1.9	2.6	2.0	2.8	2.1	2.9	2.2	3.0	2.1	3.0	2.0
	39.0	1.9	1.7	2.3	1.9	2.6	2.0	2.8	2.1	2.9	2.2	2.9	2.1	3.0	2.0
32	10.0	2.4	2.0	2.9	2.3	3.4	2.5	3.6	2.5	3.8	2.7	4.3	2.8	4.7	2.8
	12.0	2.4	2.0	2.9	2.3	3.4	2.5	3.6	2.5	3.8	2.7	4.3	2.8	4.7	2.7
	14.0	2.4	2.0	2.9	2.3	3.4	2.5	3.6	2.5	3.8	2.7	4.3	2.8	4.6	2.7
	16.0	2.4	2.0	2.9	2.3	3.4	2.5	3.6	2.5	3.8	2.7	4.3	2.8	4.6	2.7
	18.0	2.4	2.0	2.9	2.3	3.4	2.5	3.6	2.5	3.8	2.7	4.3	2.8	4.5	2.6
	20.0	2.4	2.0	2.9	2.3	3.4	2.5	3.6	2.5	3.8	2.7	4.3	2.8	4.4	2.6
	21.0	2.4	2.0	2.9	2.3	3.4	2.5	3.6	2.5	3.8	2.7	4.3	2.8	4.4	2.6
	23.0	2.4	2.0	2.9	2.3	3.4	2.5	3.6	2.5	3.8	2.7	4.2	2.7	4.3	2.6
	25.0	2.4	2.0	2.9	2.3	3.4	2.5	3.6	2.5	3.8	2.7	4.2	2.7	4.3	2.5
	27.0	2.4	2.0	2.9	2.3	3.4	2.5	3.6	2.5	3.8	2.7	4.1	2.6	4.2	2.5
	29.0	2.4	2.0	2.9	2.3	3.4	2.5	3.6	2.5	3.8	2.7	4.1	2.6	4.2	2.5
	31.0	2.4	2.0	2.9	2.3	3.4	2.5	3.6	2.5	3.8	2.7	4.0	2.6	4.1	2.5
	33.0	2.4	2.0	2.9	2.3	3.4	2.5	3.6	2.5	3.8	2.7	3.9	2.6	4.0	2.4
	35.0	2.4	2.0	2.9	2.3	3.4	2.5	3.6	2.5	3.8	2.7	3.9	2.6	4.0	2.4
	37.0	2.4	2.0	2.9	2.3	3.4	2.5	3.6	2.5	3.7	2.7	3.8	2.5	3.9	2.4
	39.0	2.4	2.0	2.9	2.3	3.4	2.5	3.6	2.6	3.7	2.6	3.8	2.5	3.8	2.4
40	10.0	3.0	2.6	3.6	3.0	4.2	3.2	4.5	3.3	4.8	3.6	5.4	3.3	5.9	3.6
	12.0	3.0	2.6	3.6	3.0	4.2	3.2	4.5	3.3	4.8	3.6	5.4	3.3	5.8	3.6
	14.0	3.0	2.6	3.6	3.0	4.2	3.2	4.5	3.3	4.8	3.6	5.4	3.3	5.8	3.5
	16.0	3.0	2.6	3.6	3.0	4.2	3.2	4.5	3.3	4.8	3.6	5.4	3.3	5.7	3.5
	18.0	3.0	2.6	3.6	3.0	4.2	3.2	4.5	3.3	4.8	3.6	5.4	3.3	5.6	3.5
	20.0	3.0	2.6	3.6	3.0	4.2	3.2	4.5	3.3	4.8	3.6	5.4	3.3	5.5	3.4
	21.0	3.0	2.6	3.6	3.0	4.2	3.2	4.5	3.3	4.8	3.6	5.4	3.3	5.5	3.4
	23.0	3.0	2.6	3.6	3.0	4.2	3.2	4.5	3.3	4.8	3.6	5.3	3.3	5.4	3.4
	25.0	3.0	2.6	3.6	3.0	4.2	3.2	4.5	3.3	4.8	3.6	5.2	3.2	5.3	3.3
	27.0	3.0	2.6	3.6	3.0	4.2	3.2	4.5	3.3	4.8	3.6	5.2	3.2	5.3	3.3
	29.0	3.0	2.6	3.6	3.0	4.2	3.2	4.5	3.3	4.8	3.6	5.1	3.2	5.2	3.3
	31.0	3.0	2.6	3.6	3.0	4.2	3.2	4.5	3.3	4.8	3.6	5.0	3.1	5.1	3.2
	33.0	3.0	2.6	3.6	3.0	4.2	3.2	4.5	3.3	4.8	3.6	4.9	3.1	5.0	3.2
	35.0	3.0	2.6	3.6	3.0	4.2	3.2	4.5	3.3	4.7	3.6	4.9	3.1	5.0	3.2
	37.0	3.0	2.6	3.6	3.0	4.2	3.2	4.5	3.3	4.7	3.5	4.8	3.0	4.9	3.1
	39.0	3.0	2.6	3.6	3.0	4.2	3.2	4.5	3.3	4.6	3.5	4.7	3.0	4.8	3.1
50	10.0	3.8	3.2	4.5	3.7	5.2	3.9	5.6	4.1	6.0	4.3	6.7	4.0	7.4	4.4
	12.0	3.8	3.2	4.5	3.7	5.2	3.9	5.6	4.1	6.0	4.3	6.7	4.0	7.3	4.4
	14.0	3.8	3.2	4.5	3.7	5.2	3.9	5.6	4.1	6.0	4.3	6.7	4.0	7.2	4.3
	16.0	3.8	3.2	4.5	3.7	5.2	3.9	5.6	4.1	6.0	4.3	6.7	4.0	7.1	4.3
	18.0	3.8	3.2	4.5	3.7	5.2	3.9	5.6	4.1	6.0	4.3	6.7	4.0	7.0	4.3
	20.0	3.8	3.2	4.5	3.7	5.2	3.9	5.6	4.1	6.0	4.3	6.7	4.0	6.9	4.2
	21.0	3.8	3.2	4.5	3.7	5.2	3.9	5.6	4.1	6.0	4.3	6.7	4.0	6.8	4.2
	23.0	3.8	3.2	4.5	3.7	5.2	3.9	5.6	4.1	6.0	4.3	6.6	4.0	6.7	4.2
	25.0	3.8	3.2	4.5	3.7	5.2	3.9	5.6	4.1	6.0	4.3	6.5	4.0	6.6	4.1
	27.0	3.8	3.2	4.5	3.7	5.2	3.9	5.6	4.1	6.0	4.3	6.4	3.9	6.6	4.1
	29.0	3.8	3.2	4.5	3.7	5.2	3.9	5.6	4.1	6.0	4.3	6.3	3.9	6.5	4.0
	31.0	3.8	3.2	4.5	3.7	5.2	3.9	5.6	4.1	6.0	4.3	6.2	3.8	6.4	4.0
	33.0	3.8	3.2	4.5	3.7	5.2	3.9	5.6	4.1	6.0	4.3	6.1	3.8	6.3	3.9
	35.0	3.8	3.2	4.5	3.7	5.2	3.9	5.6	4.1	5.9	4.3	6.0	3.8	6.2	3.9
	37.0	3.8	3.2	4.5	3.7	5.2	3.9	5.6	4.1	5.8	4.3	5.9	3.7	6.1	3.9
	39.0	3.8	3.2	4.5	3.7	5.2	3.9	5.6	4.1	5.7	4.2	5.8	3.7	6.0	3.8

Cooling capacity

Unit Size	Outdoor air temp. °CDB	Indoor air temp. 14.0°CWB 20°CDB TC	SC	16.0°CWB 23°CDB TC	SC	18.0°CWB 26°CDB TC	SC	19.0°CWB 27°CDB TC	SC	20.0°CWB 28°CDB TC	SC	22.0°CWB 30°CDB TC	SC	24.0°CWB 32°CDB TC	SC
63	10.0	4.8	4.1	5.7	4.7	6.6	4.9	7.1	5.2	7.6	5.5	8.5	5.6	9.3	5.6
	12.0	4.8	4.1	5.7	4.7	6.6	4.9	7.1	5.2	7.6	5.5	8.5	5.6	9.2	5.6
	14.0	4.8	4.1	5.7	4.7	6.6	4.9	7.1	5.2	7.6	5.5	8.5	5.6	9.1	5.5
	16.0	4.8	4.1	5.7	4.7	6.6	4.9	7.1	5.2	7.6	5.5	8.5	5.6	9.0	5.4
	18.0	4.8	4.1	5.7	4.7	6.6	4.9	7.1	5.2	7.6	5.5	8.5	5.6	8.8	5.3
	20.0	4.8	4.1	5.7	4.7	6.6	4.9	7.1	5.2	7.6	5.5	8.5	5.6	8.7	5.3
	21.0	4.8	4.1	5.7	4.7	6.6	4.9	7.1	5.2	7.6	5.5	8.5	5.6	8.7	5.2
	23.0	4.8	4.1	5.7	4.7	6.6	4.9	7.1	5.2	7.6	5.5	8.4	5.5	8.5	5.2
	25.0	4.8	4.1	5.7	4.7	6.6	4.9	7.1	5.2	7.6	5.5	8.3	5.5	8.4	5.1
	27.0	4.8	4.1	5.7	4.7	6.6	4.9	7.1	5.2	7.6	5.5	8.1	5.4	8.3	5.1
	29.0	4.8	4.1	5.7	4.7	6.6	4.9	7.1	5.2	7.6	5.5	8.0	5.3	8.2	5.1
	31.0	4.8	4.1	5.7	4.7	6.6	4.9	7.1	5.2	7.6	5.5	7.9	5.3	8.1	5.0
	33.0	4.8	4.1	5.7	4.7	6.6	4.9	7.1	5.2	7.6	5.5	7.8	5.2	7.9	5.0
	35.0	4.8	4.1	5.7	4.7	6.6	4.9	7.1	5.2	7.5	5.5	7.7	5.2	7.8	4.9
	37.0	4.8	4.1	5.7	4.7	6.6	4.9	7.1	5.2	7.4	5.4	7.5	5.2	7.7	4.9
	39.0	4.8	4.1	5.7	4.7	6.6	4.9	7.1	5.2	7.2	5.4	7.4	5.1	7.6	4.9
80	10.0	6.1	5.0	7.2	5.7	8.4	6.1	9.0	6.3	9.6	6.6	10.8	6.8	11.8	6.9
	12.0	6.1	5.0	7.2	5.7	8.4	6.1	9.0	6.3	9.6	6.6	10.8	6.8	11.7	6.8
	14.0	6.1	5.0	7.2	5.7	8.4	6.1	9.0	6.3	9.6	6.6	10.8	6.8	11.5	6.7
	16.0	6.1	5.0	7.2	5.7	8.4	6.1	9.0	6.3	9.6	6.6	10.8	6.8	11.4	6.6
	18.0	6.1	5.0	7.2	5.7	8.4	6.1	9.0	6.3	9.6	6.6	10.8	6.8	11.2	6.5
	20.0	6.1	5.0	7.2	5.7	8.4	6.1	9.0	6.3	9.6	6.6	10.8	6.8	11.1	6.4
	21.0	6.1	5.0	7.2	5.7	8.4	6.1	9.0	6.3	9.6	6.6	10.8	6.8	11.0	6.4
	23.0	6.1	5.0	7.2	5.7	8.4	6.1	9.0	6.3	9.6	6.6	10.6	6.7	10.8	6.3
	25.0	6.1	5.0	7.2	5.7	8.4	6.1	9.0	6.3	9.6	6.6	10.5	6.6	10.7	6.2
	27.0	6.1	5.0	7.2	5.7	8.4	6.1	9.0	6.3	9.6	6.6	10.3	6.5	10.5	6.2
	29.0	6.1	5.0	7.2	5.7	8.4	6.1	9.0	6.3	9.6	6.6	10.2	6.5	10.4	6.1
	31.0	6.1	5.0	7.2	5.7	8.4	6.1	9.0	6.3	9.6	6.6	10.0	6.4	10.2	6.1
	33.0	6.1	5.0	7.2	5.7	8.4	6.1	9.0	6.3	9.6	6.6	9.8	6.3	10.1	6.1
	35.0	6.1	5.0	7.2	5.7	8.4	6.1	9.0	6.3	9.5	6.6	9.7	6.3	9.9	6.0
	37.0	6.1	5.0	7.2	5.7	8.4	6.1	9.0	6.3	9.3	6.5	9.5	6.2	9.8	6.0
	39.0	6.1	5.0	7.2	5.7	8.4	6.1	9.0	6.4	9.2	6.5	9.4	6.2	9.6	5.9
100	10.0	7.6	6.2	9.0	7.1	10.5	7.6	11.2	7.9	11.9	8.3	13.4	8.5	14.7	8.5
	12.0	7.6	6.2	9.0	7.1	10.5	7.6	11.2	7.9	11.9	8.3	13.4	8.5	14.5	8.4
	14.0	7.6	6.2	9.0	7.1	10.5	7.6	11.2	7.9	11.9	8.3	13.4	8.5	14.4	8.3
	16.0	7.6	6.2	9.0	7.1	10.5	7.6	11.2	7.9	11.9	8.3	13.4	8.5	14.2	8.2
	18.0	7.6	6.2	9.0	7.1	10.5	7.6	11.2	7.9	11.9	8.3	13.4	8.5	14.0	8.1
	20.0	7.6	6.2	9.0	7.1	10.5	7.6	11.2	7.9	11.9	8.3	13.4	8.5	13.8	8.0
	21.0	7.6	6.2	9.0	7.1	10.5	7.6	11.2	7.9	11.9	8.3	13.4	8.5	13.7	7.9
	23.0	7.6	6.2	9.0	7.1	10.5	7.6	11.2	7.9	11.9	8.3	13.2	8.4	13.5	7.8
	25.0	7.6	6.2	9.0	7.1	10.5	7.6	11.2	7.9	11.9	8.3	13.0	8.3	13.3	7.7
	27.0	7.6	6.2	9.0	7.1	10.5	7.6	11.2	7.9	11.9	8.3	12.8	8.1	13.1	7.7
	29.0	7.6	6.2	9.0	7.1	10.5	7.6	11.2	7.9	11.9	8.3	12.6	8.0	12.9	7.6
	31.0	7.6	6.2	9.0	7.1	10.5	7.6	11.2	7.9	11.9	8.3	12.4	8.0	12.7	7.5
	33.0	7.6	6.2	9.0	7.1	10.5	7.6	11.2	7.9	11.9	8.3	12.2	7.9	12.5	7.5
	35.0	7.6	6.2	9.0	7.1	10.5	7.6	11.2	7.9	11.8	8.2	12.1	7.8	12.3	7.5
	37.0	7.6	6.2	9.0	7.1	10.5	7.6	11.2	7.9	11.6	8.1	11.9	7.8	12.2	7.4
	39.0	7.6	6.2	9.0	7.1	10.5	7.6	11.2	7.9	11.4	8.1	11.7	7.7	12.0	7.3
125	10.0	9.5	7.8	11.3	8.9	13.1	9.6	14.0	9.9	14.9	10.3	16.8	10.7	18.4	11.0
	12.0	9.5	7.8	11.3	8.9	13.1	9.6	14.0	9.9	14.9	10.3	16.8	10.7	18.2	10.9
	14.0	9.5	7.8	11.3	8.9	13.1	9.6	14.0	9.9	14.9	10.3	16.8	10.7	18.0	10.7
	16.0	9.5	7.8	11.3	8.9	13.1	9.6	14.0	9.9	14.9	10.3	16.8	10.7	17.7	10.6
	18.0	9.5	7.8	11.3	8.9	13.1	9.6	14.0	9.9	14.9	10.3	16.8	10.7	17.5	10.4
	20.0	9.5	7.8	11.3	8.9	13.1	9.6	14.0	9.9	14.9	10.3	16.8	10.7	17.2	10.3
	21.0	9.5	7.8	11.3	8.9	13.1	9.6	14.0	9.9	14.9	10.3	16.8	10.7	17.1	10.2
	23.0	9.5	7.8	11.3	8.9	13.1	9.6	14.0	9.9	14.9	10.3	16.5	10.6	16.9	10.1
	25.0	9.5	7.8	11.3	8.9	13.1	9.6	14.0	9.9	14.9	10.3	16.3	10.4	16.6	10.0
	27.0	9.5	7.8	11.3	8.9	13.1	9.6	14.0	9.9	14.9	10.3	16.1	10.3	16.4	9.9
	29.0	9.5	7.8	11.3	8.9	13.1	9.6	14.0	9.9	14.9	10.3	15.8	10.1	16.2	9.8
	31.0	9.5	7.8	11.3	8.9	13.1	9.6	14.0	9.9	14.9	10.3	15.6	10.0	15.9	9.6
	33.0	9.5	7.8	11.3	8.9	13.1	9.6	14.0	9.9	14.9	10.3	15.3	9.9	15.7	9.5
	35.0	9.5	7.8	11.3	8.9	13.1	9.6	14.0	9.9	14.8	10.2	15.1	9.8	15.4	9.4
	37.0	9.5	7.8	11.3	8.9	13.1	9.6	14.0	9.9	14.5	10.1	14.9	9.7	15.2	9.3
	39.0	9.5	7.8	11.3	8.9	13.1	9.6	14.0	10.0	14.3	9.9	14.6	9.6	15.0	9.2

TC Total capacity ; kW
SC Sensible capacity ; kW

Refer to Outdoor Unit Capacity Tables : on page 411~, 470~, for the actual performance data of each indoor and outdoor unit combination.

8. Fan Performances

8.1 50Hz

FXSQ20 · 25M

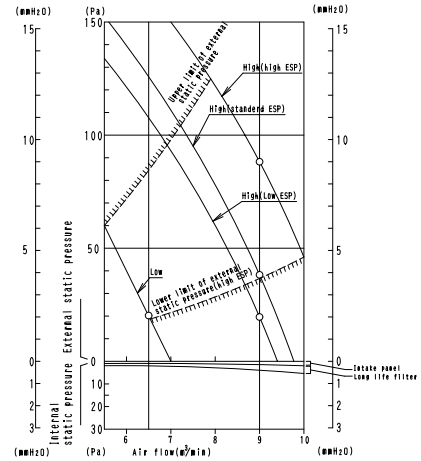

C : 3D036959-5

FXSQ32M

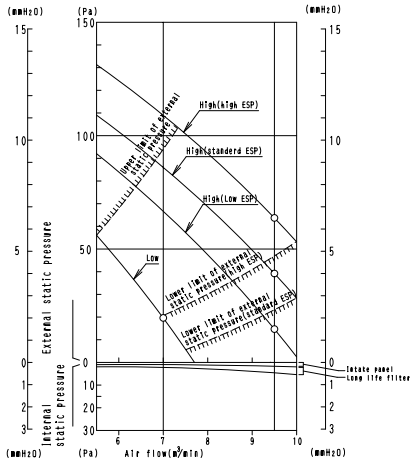

C : 3D036960-5

FXSQ40M

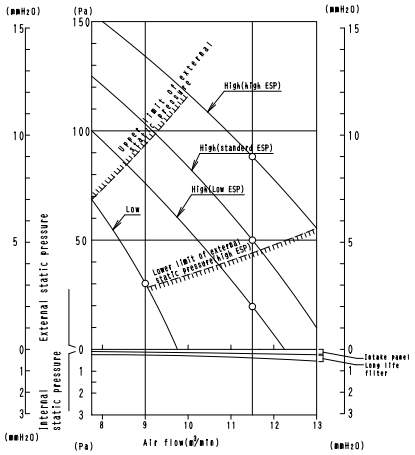

C : 3D036961-5

FXSQ50M

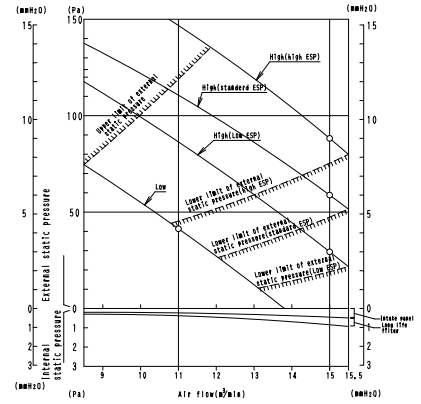

C : 3D036962-5

FXSQ63M

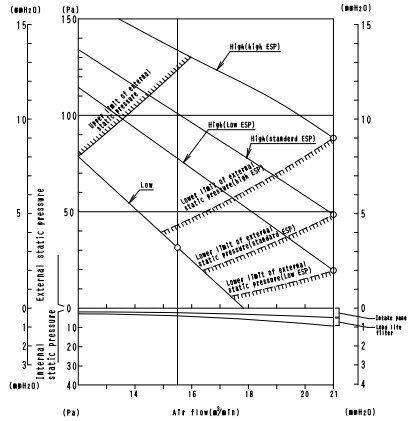

C : 3D036963-5

FXSQ80M

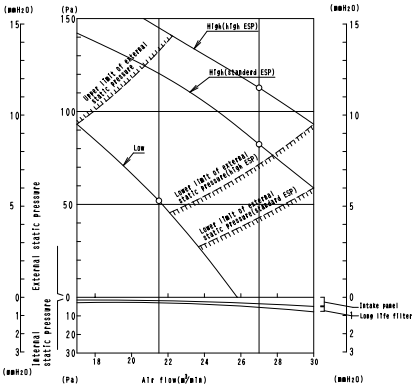

C : 3D036964-5

FXSQ100M

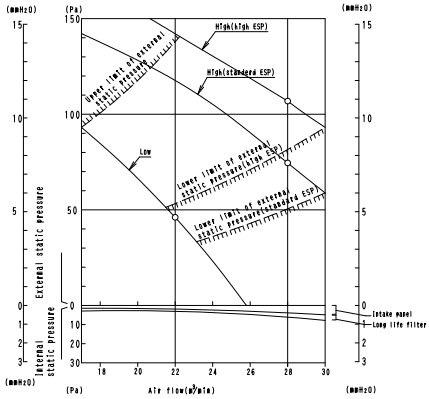

C : 3D036965-5

FXSQ125M

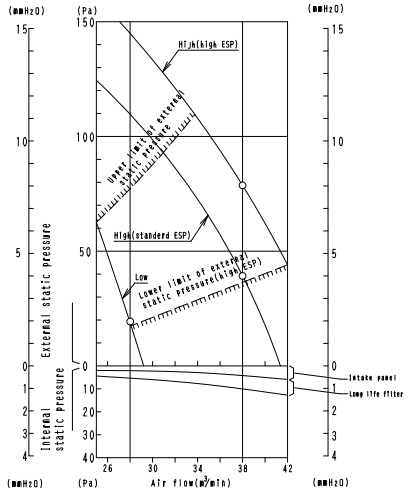

C : 3D036966-5

Note:

1. The remote controller can be used to switch between “high” and “low”.
2. The air flow is set to “standard” before leaving the factory. It is possible to switch between “standard ESP” and “high ESP” by changing the terminals in the indoor unit electrical box.
3. The external static pressure indicates the characteristics of the fan when a suction panel (optional accessory) and a canvas for the suction panel (optional accessory) are incorporated into the main unit (with a long-life filter).

9. Sound Levels

Overall

■ **Ceiling Mounted Built-In Type**

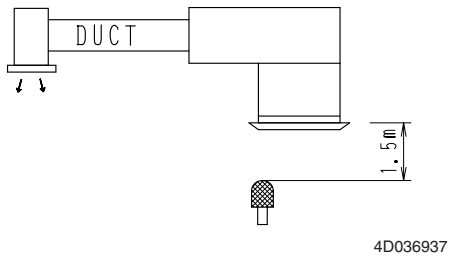

Note:

1. The operating conditions are assumed to be standard (JIS conditions).
2. These operating values were obtained in a dead room (conversion values).
   Sound level will vary depending on a range of factors such as the construction (acoustic absorption coefficient) of the particular room in which the equipments installed.

dBA

Model	220V, 50Hz		240V, 50Hz	
	H	L	H	L
FXSQ20M FXSQ25M	37	32	39	34
FXSQ32M FXSQ40M	38	32	40	34
FXSQ50M	41	36	43	38
FXSQ63M	42	35	44	37
FXSQ80M FXSQ100M	43	37	45	39
FXSQ125M	46	41	48	43

6

Octave Band Level

○———○ 220V 50Hz
○- - - -○ 240V 50Hz

FXSQ20 · 25MVE

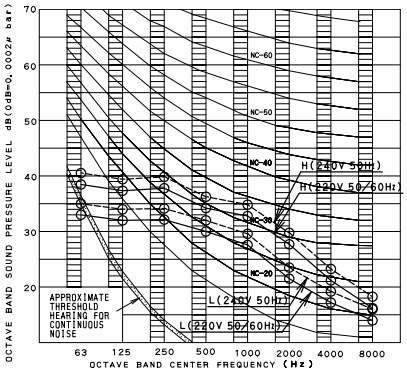

4D036937

FXSQ32MVE

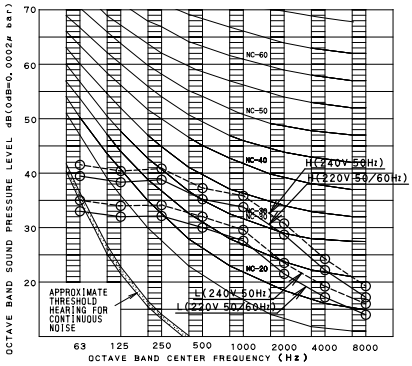

4D036938

FXSQ40MVE

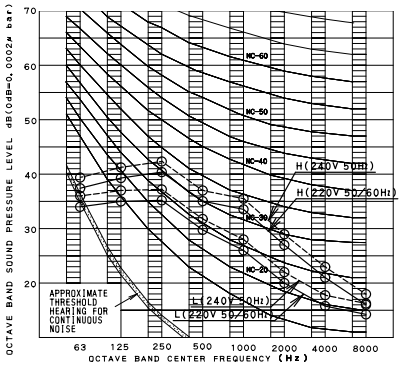

4D036939

FXSQ50MVE

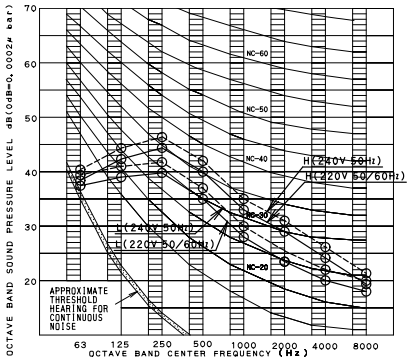

4D036940

FXSQ63MVE

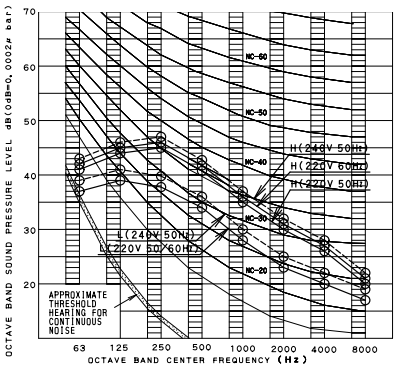

4D036941

FXSQ80MVE

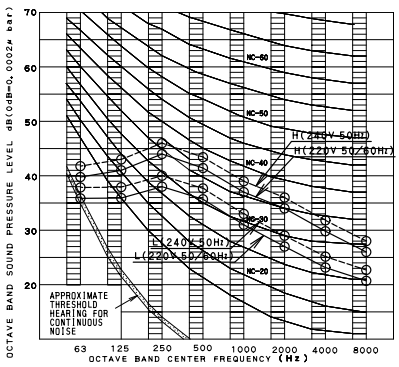

4D036942

FXSQ100MVE

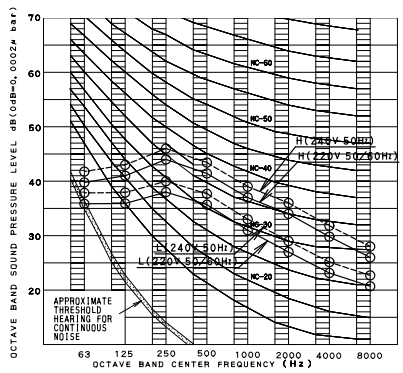

4D036943

FXSQ125MVE

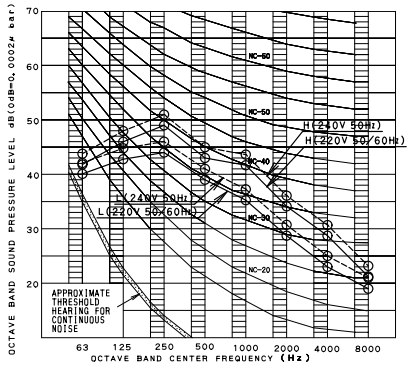

4D036944

10. Installation

Center of Gravity

Unit (mm)

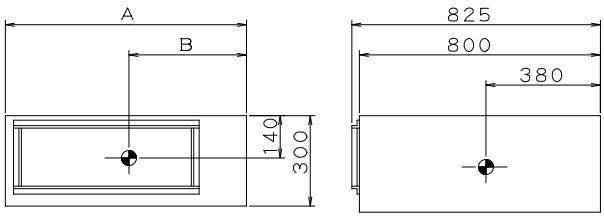

MODEL	A	B
FXSQ20・25・32MVE	550	250
FXSQ40・50MVE	700	300
FXSQ63MVE	1000	460
FXSQ80・100・125MVE	1400	640

C : 4D036946D

6

Service Space

Unit (mm)

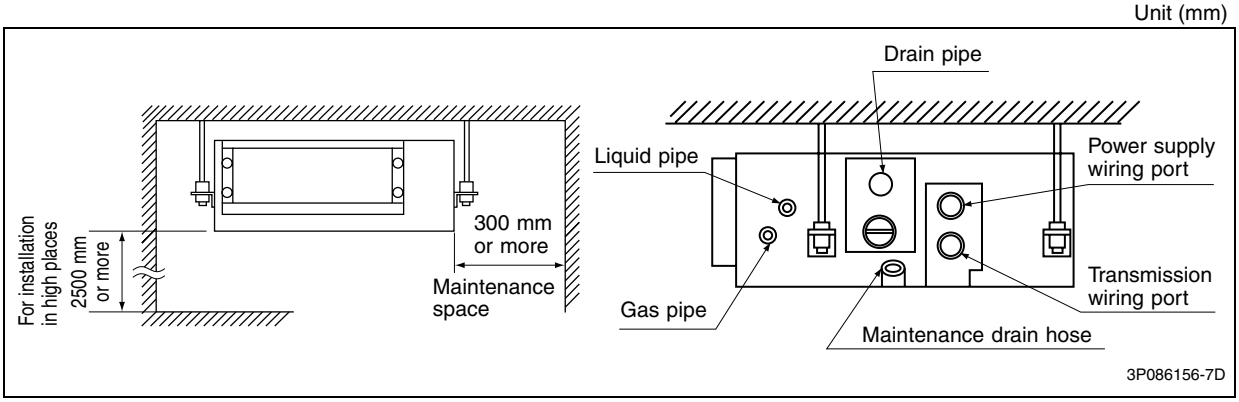

Note:
Above figure means minimum value. Please keep these value at least.

Bolt Pitch

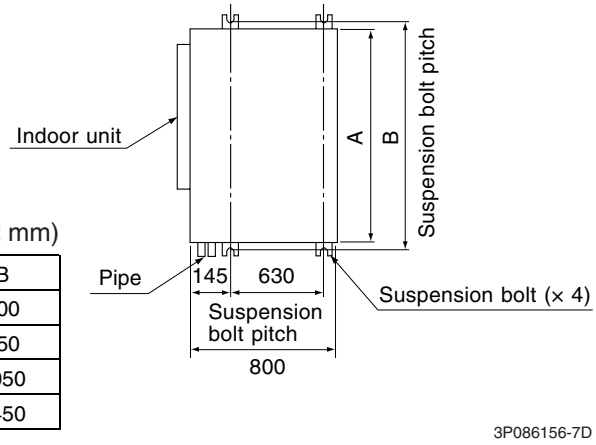

(Unit : mm)

Model	A	B
FXSQ20 · 25 · 32MVE	550	600
FXSQ40 · 50MVE	700	750
FXSQ63MVE	1000	1050
FXSQ80 · 100 · 125MVE	1400	1450

・ For standard installation (air inlet on the bottom side), choose one of the below two means of installation.

Note: For other than standard installation, contact your Daikin dealer for details.

Drain Pump Kit

Indoor unit	Drain pump kit
FXSQ-M	Standard (Equipped with indoor unit)

Drain Piping Work

<<Rig the drain pipe as shown below and take measures against condensation. Improperly rigged piping could lead to leaks and eventually wet furniture and belongings.>>

(1) Carry out the drain piping

- The diameter of the drain pipe should be greater than or equal to the diameter of the connecting pipe (vinyl tube ; pipe size; 25 mm ; outer dimension : 32 mm).
- Keep the drain pipe short and sloping downwards at a gradient of at least 1 / 100 to prevent air pockets from forming.
- If the drain hose cannot be sufficiently set on a slope, execute the drain raising piping.
- To keep the drain hose from sagging, space hanging wires every 1 to 1.5 m.

CAUTION

Setting the unit at an angle opposite to the drain piping might cause leaks.

- Use the drain hose and the metal clamp. Tighten the clamp firmly. Insert the drain hose into the drain socket, up to the tape. Tighten the clamp until the screw head is less than 4 mm from the hose.
- Wrap the sealing pad over the metal clamp and drain hose to insulate.
- Insulate the drain hose inside the building.

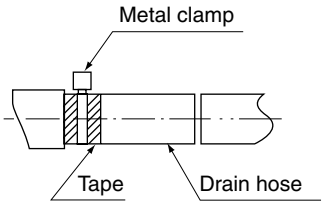

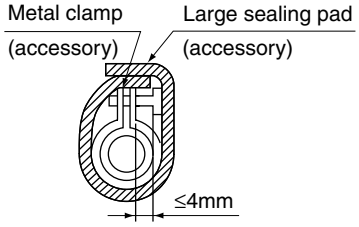

〈 PRECAUTIONS FOR DRAIN RAISING PIPING 〉

〈HOW TO INSTALL PIPING〉

(1) Connect the drain hose to the drain raising pipes, and insulate them.
(2) Connect the drain hose to the drain outlet on the indoor unit, and tighten it with the metal clamp.
(3) Insulate both metal clamp and drain hose with the sealing pad.

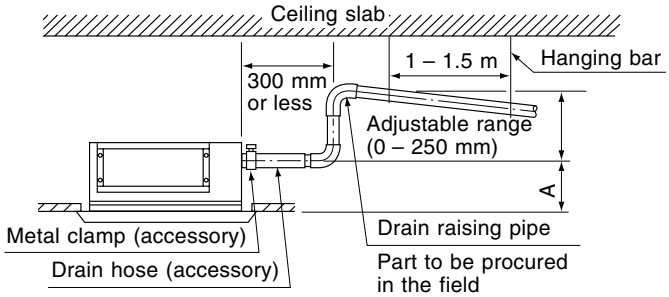

	A (mm)
When canvas duct is installed	350 – 530
When air inlet panel is directly installed	275

- If converging multiple drain pipes, install according to the procedure shown below.

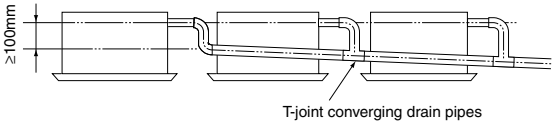

Select converging drain pipes whose gauge is suitable for the operating capacity of the unit.

CAUTION

- Drain piping connections
  Do not connect the drain piping directly to sewage pipes that smell of ammonia. The ammonia in the sewage might enter the indoor unit through the drain pipes and corrode the heat exchanger.
- Keep in mind that it will become the cause of getting drain pipe blocked if water collects on drain pipe.

3P086156-7D

(2) After piping work is finished, check drainage flows smoothly.

- Open the water inlet lid, add approximately 1 liter of water gradually and check drainage flow.

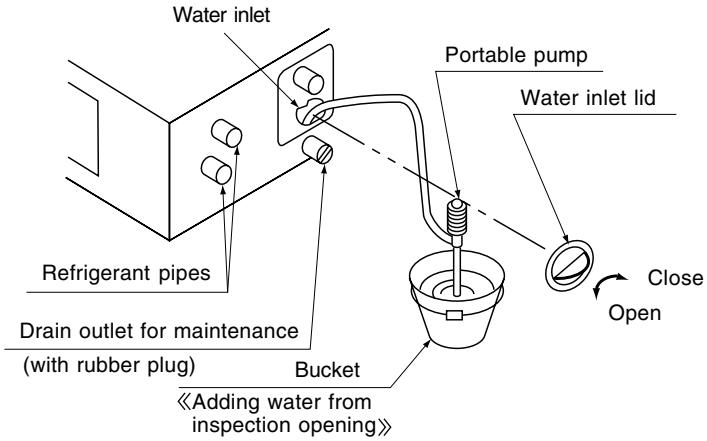

Note: Use this outlet to drain water from the drain pan.

[WHEN ELECTRIC WIRING WORK IS FINISHED]

- Check drainage flow during COOL running, explained under "TEST OPERATION."

[WHEN ELECTRIC WIRING WORK IS NOT FINISHED]

- Remove the electric parts box lid, connect a power supply and remote controller to the terminals.
  (Refer to the "HOW TO CONNECT WIRINGS")
  Be sure attach the electric parts box lid before turning on the power.
  Next, press the inspection / test operation button " TEST " on the remote controller. The unit will engage the test operation mode.
  Press the operation mode selector button " " until selecting FAN OPERATION " ". Then, press the ON/OFF button " ". The indoor unit fan and drain pump will start up. Check that the water has drained from the unit. Press " TEST " to go back to the first mode.

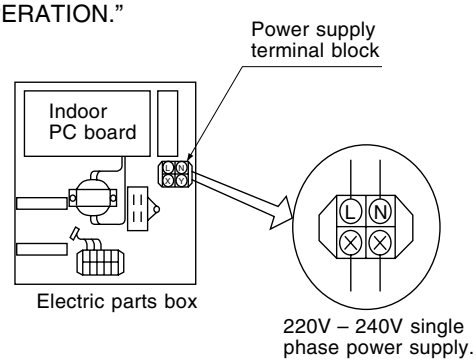

- You can check whether drainage is satisfactory or not by removing the access opening lid and checking the water level of the drain pan through the access opening.
- **Be careful when doing so because the fan is turning at the same time.**

3P086156-7D

11. Accessories

Standard Accessories

FXSQ20~125M

Name	Metal clamp	Paper pattern for installation	Drain hose	Insulation for fitting	Sealing pad	Screws for duct flanges
Quantity	1 pc.	1 pc.	1 pc.	1 each.	1 each.	1 set
Shape				for gas pipe for liquid pipe	Large mid	FXSQ20 · 25 · 32MVE: 6 FXSQ40 · 50MVE: 8 FXSQ63MVE: 12 FXSQ80 · 100 · 125MVE: 16

Name	Washer for hanging bracket	Clamp	Screws for fixing the paper pattern for installation	(Other)
Quantity	8 pcs.	6 pcs.	6 pcs.	• Operation manual • Installation manual • Sealing material (Small 35×150)
Shape				

• Screws for fixing panels are attached to decoration panel.

3P086156-7D

Optional Accessories (For Unit)

No.	Item		Type	FXSQ20M FXSQ25M FXSQ32M	FXSQ40M FXSQ50M	FXSQ63M	FXSQ80M FXSQ100M	FXSQ125M
1	Panel related	Decoration panel		BYBS32DJW1	BYBS45DJW1	BYBS71DJW1	BYBS125DJW1	
		Access panel		KTBJ25K36W	KTBJ25K56W	KTBJ25K80W	KTBJ25K160W	
2	∗1 Auxiliary electric heater	Model	240V/220V	KEA25K32VE	KEA25K50VE	KEA25K63VE	KEA25K100VE	KEA25K125VE
		Capacity	kW	0.75	1.2	1.4	2.1	2.8
3	Filter related	∗2 High efficiency filter 65%		KAFJ252L36	KAFJ252L56	KAFJ252L80	KAFJ252L160	
		∗2 High efficiency filter 90%		KAFJ253L36	KAFJ253L56	KAFJ253L80	KAFJ253L160	
		Long life replacement filter		KAFJ251K36	KAFJ251K56	KAFJ251K80	KAFJ251K160	
		Filter chamber	For bottom suction	KAJ25L36D	KAJ25L56D	KAJ25L80D	KAJ25L160D	
			For rear suction	KAJ25L36B	KAJ25L56B	KAJ25L80B	KAJ25L160B	
4	Air inlet and air discharge outlet related	Air suction canvas		KSA-25K36	KSA-25K56	KSA-25K80	KSA-25K160	
		Screening door		KBBJ25K36	KBBJ25K56	KBBJ25K80	KBBJ25K160	
		Air suction flange		KDJ2507K36	KDJ2507K56	KDJ2507K80	KDJ2507K160	
		Air discharge adaptor		KDAJ25K36	KDAJ25K56	KDAJ25K71	KDAJ25K140	
5	Natural evaporating pan type humidifier ∗1			KNM25K32V1	KNM25K50V1	KNM25K63V1	KNM25K125V1	

Note:

∗1 One adaptor for wiring (KRP1B61) per indoor unit is required if installing an electric heater or a natural evaporating pan type humidifier. An electric heater cannot be used for VRV system cooling only.

∗2 If installing a high filter in the ceiling mounted built-in type, an assembly chamber for either bottom or rear suction is required.

Optional Accessories (For Controls) : Refer to P.561

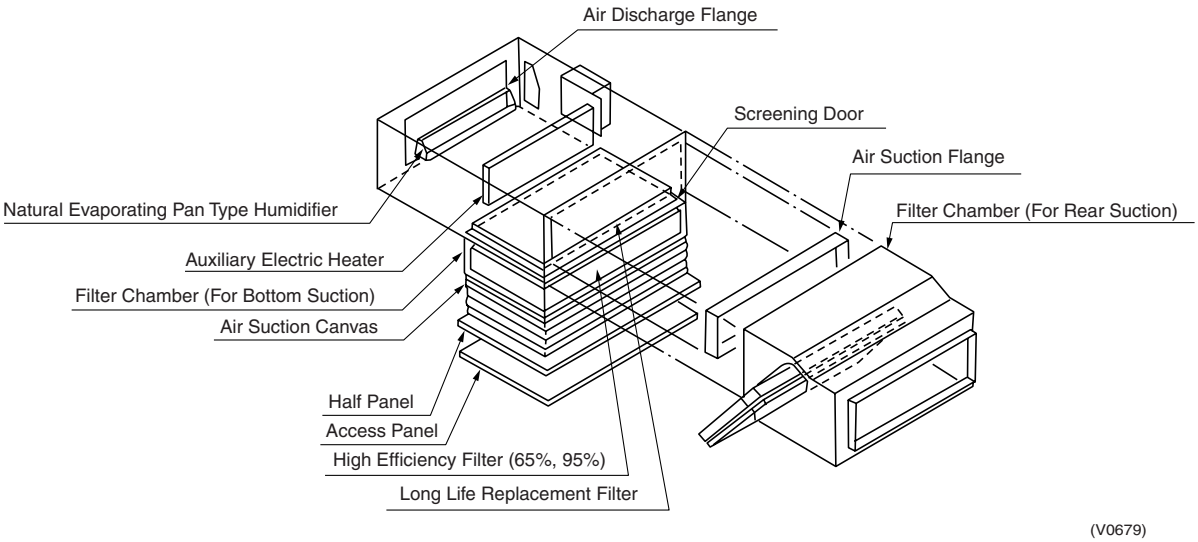

6

Access Panel

Specifications

Item \ Model	KTBJ25K36W	KTBJ25K56W	KTBJ25K80W	KTBJ25K160W
Color	White			
Applicable Model	20~32 Class	40 · 50 Class	63 Class	80~125 Class

Dimension

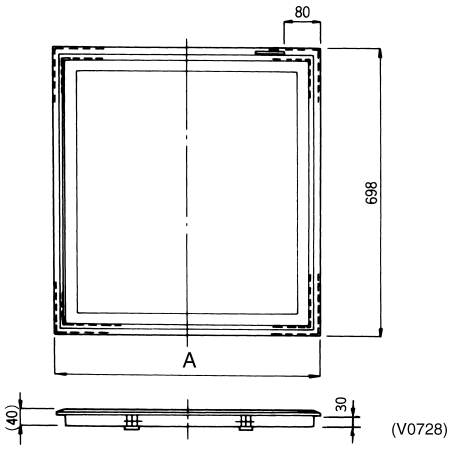

Model	A
KTBJ25K36W	626
KTBJ25K56W	776
KTBJ25K80W	1076
KTBJ25K160W	1476

Installation

[Before installation]

1. Make an opening on the ceiling

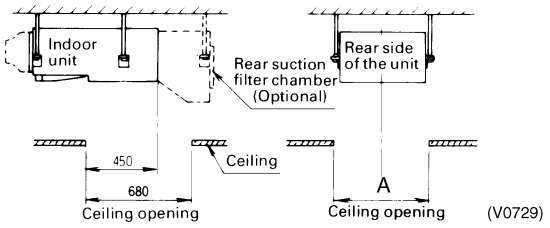

2. Install ceiling joist supports to fit the ceiling opening

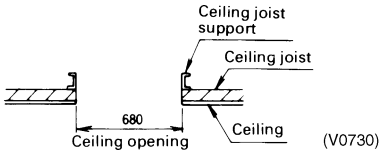

Model	A
KTBJ25K36	606
KTBJ25K56	756
KTBJ25K80	1056
KTBJ25K160	1406

[Installation of the ceiling board]

The ceiling board can be installed into the inner frame assembly as follows.

1. Remove decoration panel retainer from the inner frame assembly.
2. Remove the decoration panel and substitute with the ceiling board.
3. Set the ceiling board by retainer removed in step 1 of above.

CAUTION

When the ceiling board is installed, the decoration panel is not needed.

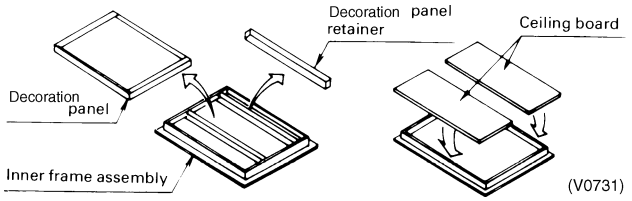

Auxiliary Electric Heater (A wiring adaptor is needed)

Specifications

Items \ Model	KEA25K32VE	KEA25K50VE	KEA25K63VE	KEA25K100VE	KEA25K125VE
Heater Capacity (kW)	0.75	1.2	1.4	2.1	2.8
Power Supply	Single Phase, 220-240V/220V 50Hz				
Applicable Models	20 · 25 · 32 Class	40 · 50 Class	63 Class	80 · 100 Class	125 Class

Installation

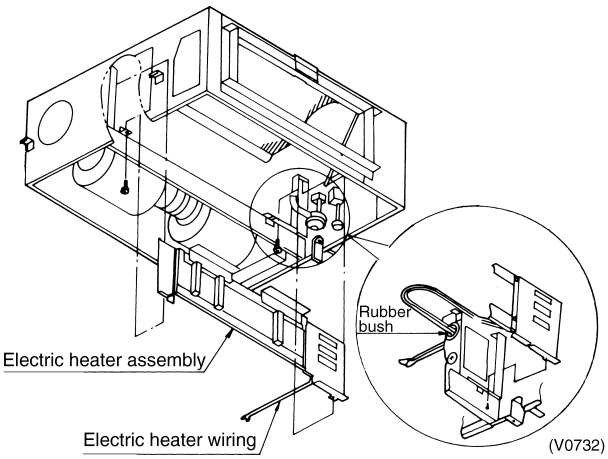

Pressure Loss of Electric Heater

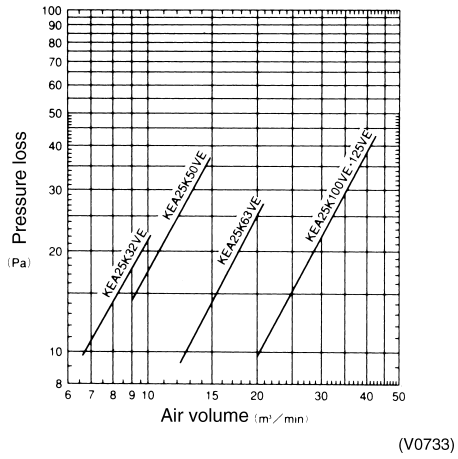

Wiring

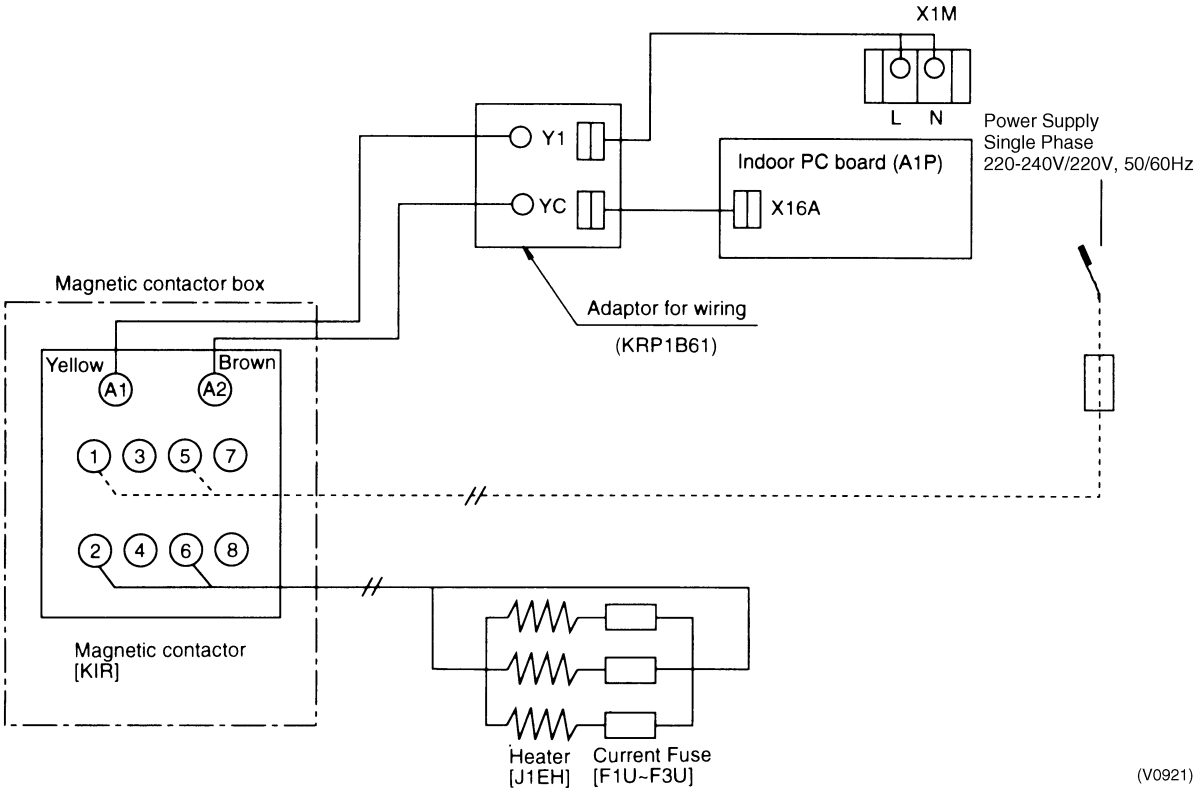

Precaution at use

1. When the aux. electric heater will be installed, “Wiring adaptor (KRP1B61)” is separately needed for one indoor unit by one piece of the adaptor.

Natural Evaporating Pan Type Humidifier (Wiring adaptor is required.)

Specifications

Item / Model	KNM25K32V1	KNM25K50V1	KNM25K63V1	KNM25K125V1
Humidifying Capacity (L/h)	0.4	0.6	1.0	1.8
Power Supply (W)	Single Phase, 220-240V 50Hz			
Power Consumption	12/9.6			
Water Inlet Port	1/2B			
Water Outlet Port	VP25 (External dia. ϕ32) (drain pipe at indoor unit)			
Applicable Models	20 · 25 · 32 Class	40 · 50 Class	63 Class	80 · 100 · 125 Class

Precaution at use

1. “Wiring adaptor (KRP1B61)” is separately needed for one indoor unit by one piece of the adaptor.
2. This humidifier will be built in a indoor unit, while the solenoid valve box will be mounted out of the unit's body (refer to the dimensions of optional accessories).
3. The field setting should be changed by a remote controller.

Note:
The value in JIS heating condition's standard.

Feed water piping

1. Provide a stop valve of feed water for the feed water circuit.
2. Supply clean water for the feed water. Contaminated water clogs a valve and the contaminants accumulate in a water tank, disturbing a normal operation of the humidifier. (Never use cooling water for a cooling tower or hot water for heating purpose). Moreover, since white powder will appear if the feed water contains much silica, it is recommended to install a water purifier or a water softener if these phenomena are found.
3. Use water in the range of water temperature 5 ~ 50°C and water pressure 0.049 ~ 0.294 MPa[0.5 ~3kg/cm²]. Provide a reducing valve between a strainer and this kit, in case of 0.294MPa or more for feed water pressure.
4. The feed water pipe can not be connected to a public water route. Accordingly, if water must be supplied through a public water by all means, provide a cistern tank (approved model only).

Wiring diagram

---------- Field wiring
Make wiring as shown on the right, if a humidity controller will be mounted.
Arrange the wiring shown right locally for that case. Set the turn-over switch to OFF for the choice of ON/OFF of group humidity controlling input on the "Wiring adaptor PC board" .

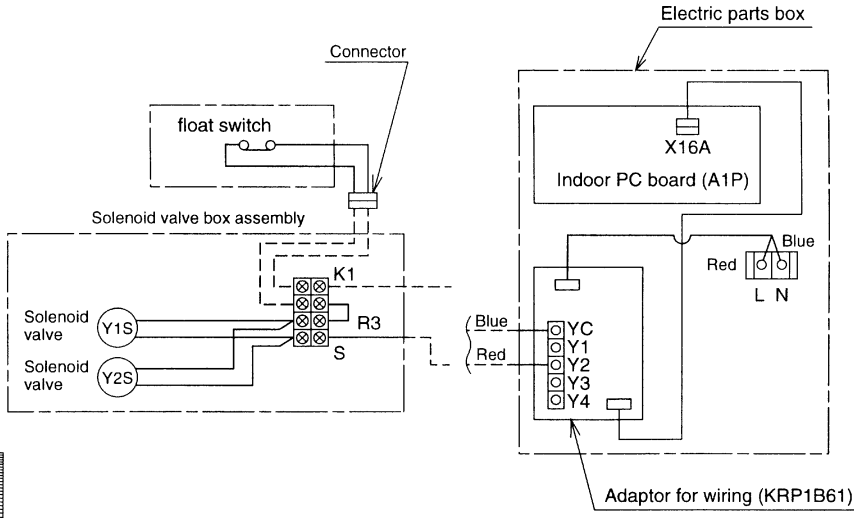

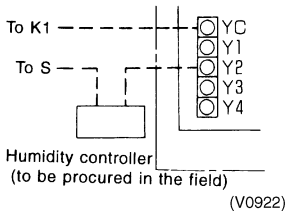

Pressure Loss of Humidifier

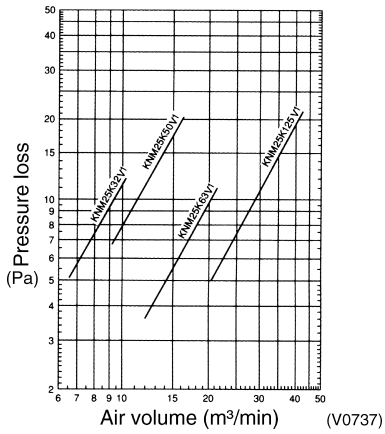

High Efficiency Filter

Specifications

Items \ Model	KAFJ252L36	KAFJ252L56	KAFJ252L80	KAFJ252L160	KAFJ253L36	KAFJ253L56	KAFJ253L80	KAFJ253L160
Dust Collection Efficiency (%)	Colorimetric method 65%				Colorimetric method 90%			
Initial Pressure Loss (Pa)	12 or less	14 or less		22 or less	21 or less	24 or less		34 or less
Final Pressure Loss (Pa)	98 or less				98 or less			
Filter	Non-woven fabric of synthetic fiber				Non-woven fabric of synthetic fiber			
Life Time (h)	2,500 hours (Dust density 0.15mg/m³)				1,800 hours (Dust density 0.15mg/m³)			
High Efficiency Filter Chamber (for the Bottom Suction)	KAJ25L36D	KAJ25L56D	KAJ25L80D	KAJ25L160D	KAJ25L36D	KAJ25L56D	KAJ25L80D	KAJ25L160D
High Efficiency Filter Chamber (for the Rear Suction)	KAJ25L36B	KAJ25L56B	KAJ25L80B	KAJ25L160B	KAJ25L36B	KAJ25L56B	KAJ25L80B	KAJ25L160B
External Dimension (mm) (T×W×D)	25×500×360	25×650×360	(25×475×360)×2	(25×700×360)×1 (25×650×360)×1	25×500×360	25×650×360	(25×475×360)×2	(25×700×360)×1 (25×650×360)×1
Applicable Models	20 · 25 · 32 Class	40 · 50 Class	63 Class	80 · 100 · 125 Class	20 · 25 · 32 Class	40 · 50 Class	63 Class	80 · 100 · 125 Class

Installation

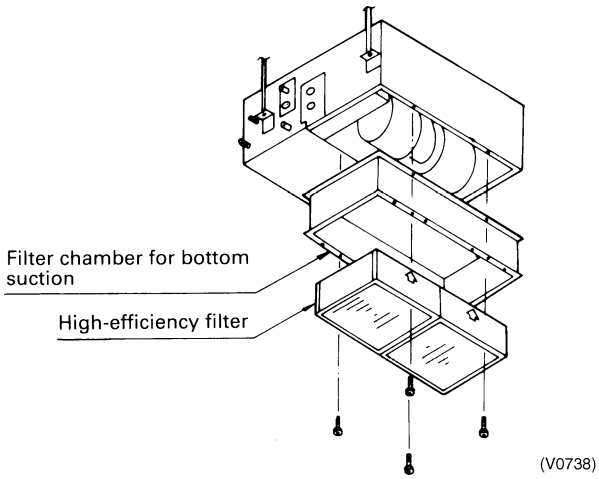

Characteristics of Filter

■ 65% type

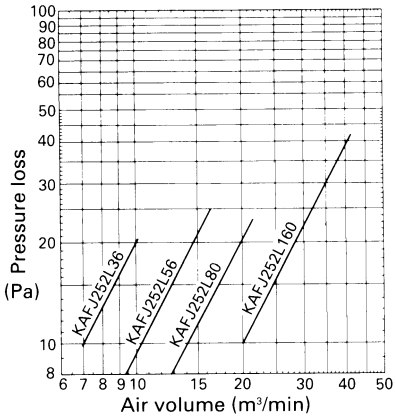

■ 90% type

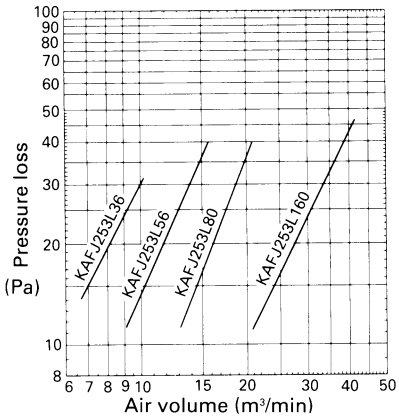

Long-Life Replacement Filter

Specifications

Item / Model		KAFJ251K36	KAFJ251K56	KAFJ251K80	KAFJ251K160
Average Efficiency (%)		50% (Gravity method)			
Pressure Loss (Pa)	Initial	10 or less		4.9 or less	
	Final	49		49 or less	
Materials		Mildew Proof Resin Net			
Number Required per Model		1	1	2	2
Life Time (h)		2,500 hours (dust particle concentration at 0.15 mg/m³)			
Applicable Model		20 · 25 · 32 Class	40 · 50 Class	63 Class	80 · 100 · 125 Class

Note:

The filter models for 20 ~ 50 Class can be used also as Rear-suction types.

Characteristics of filter

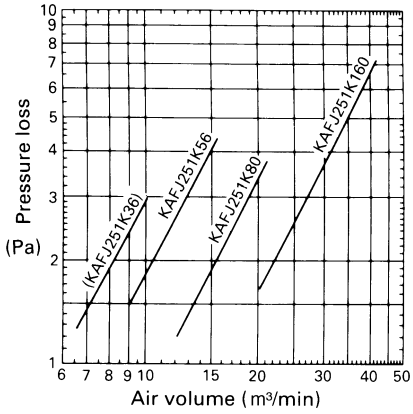

(V0741)

Canvas Duct (Air Suction Canvas)

Specifications

Item / Model		KSA-25K36	KSA-25K56	KSA-25K80	KSA-25K160
Dimensions (mm)	H	255	255	255	255
	W	550	700	1000	1400
	D	405	405	405	405
Canvas Duct		TOYOBO · SL1000 · SIMVER Flame resistant			
Applicable Model		BYBS32DJW1	BYBS45DJW1	BYBS71DJW1	BYBS125DJW1

Installation

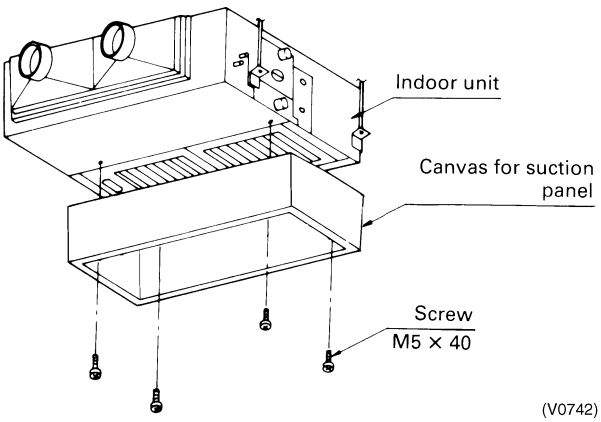

(V0742)

Suction Panel

Pressure Loss of Suction Panel

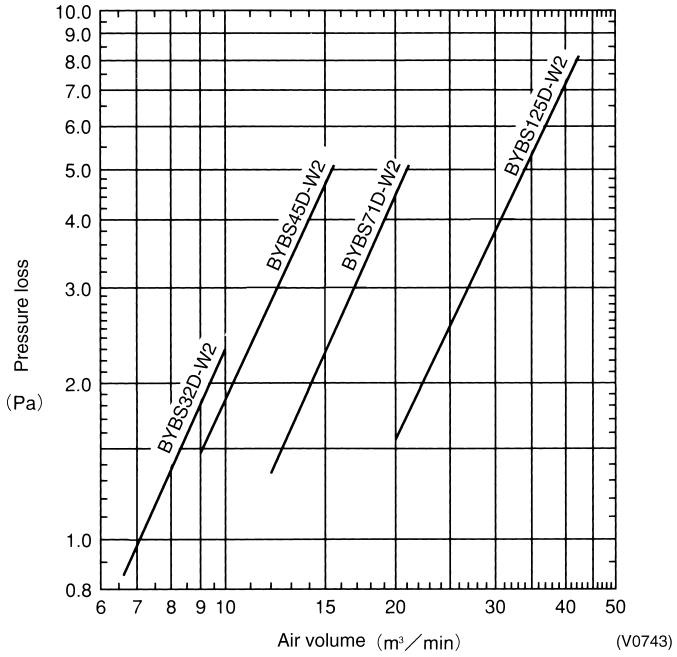

Air Discharge Adaptor

Specifications

Item \ Model	KDAJ25K36	KDAJ25K56	KDAJ25K71	KDAJ25K140
Connection Dia. (ϕmm)	ϕ200×1 port	ϕ200×2 port	ϕ200×2 port	ϕ200×4 port
Applicable Models	20 · 25 · 32 Class	40 · 50 Class	63 Class	80 · 100 · 125 Class

Filter Chamber (for Rear-suction Type)

This kit will be used for the rear-suction type when the high efficiency filter or the long life filter will be built in.

Applicable Model

Model	Applicable Model
KAJ25L36B	20 · 25 · 32 Class
KAJ25L56B	40 · 50 Class
KAJ25L80B	63 Class
KAJ25L160B	80 · 100 · 125 Class

Installation

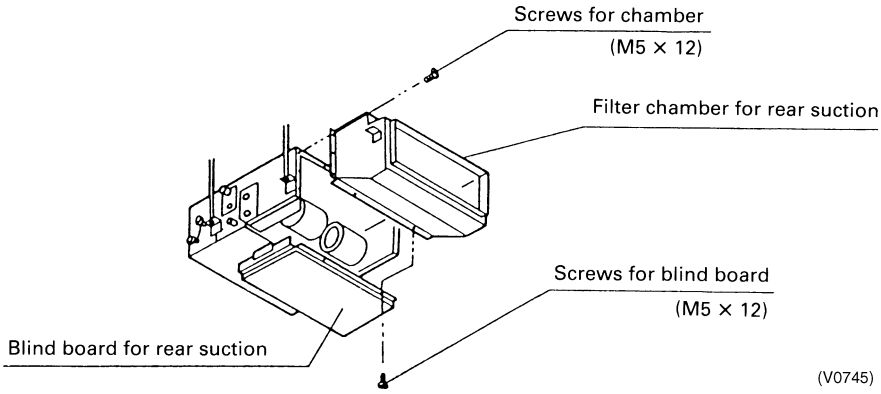

Be sure to remove the long life filter and attach the rear-suction type's sealing plate there when the filter chamber (for the rear-suction type) must be installed.

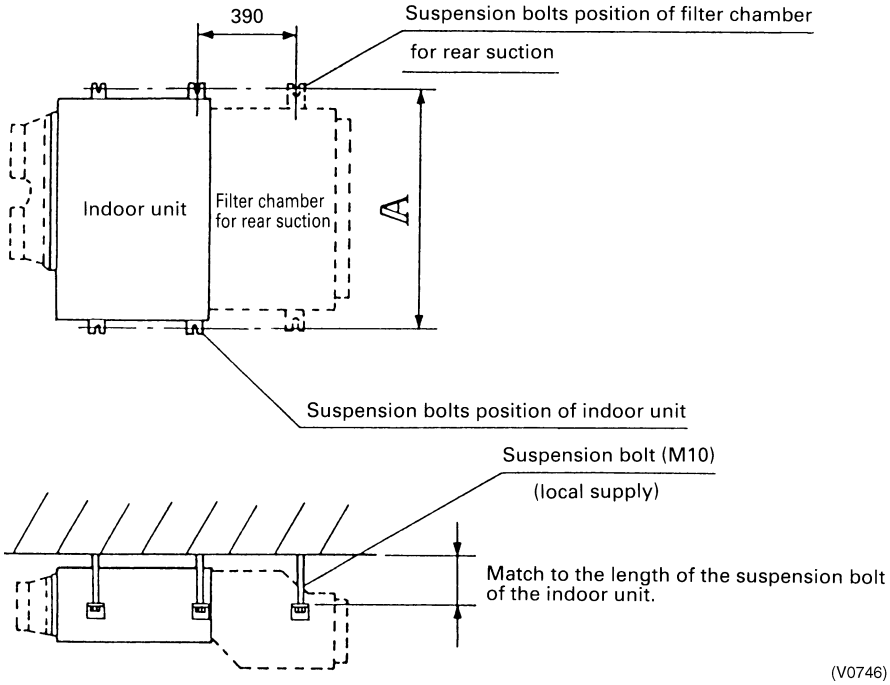

Model	A
KAJ25L36B	600
KAJ25L56B	750
KAJ25L80B	1050
KAJ25L160B	1450

Note:

Refer to the appearance figure of optional accessory describing later for further details.

Filter Chamber for Bottom Suction

Applicable Model

Model	Applicable Model
KAJ25L36D	20 · 25 · 32 Class
KAJ25L56D	40 · 50 Class
KAJ25L80D	63 Class
KAJ25L160D	80 · 100 · 125 Class

Dimension

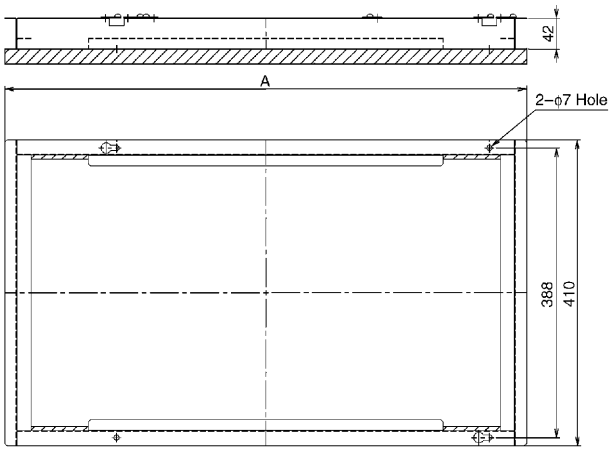

JC : D3K1420A

Model	A
KAJ25L36D	550
KAJ25L56D	700
KAJ25L80D	1000
KAJ25L160D	1400

Installation

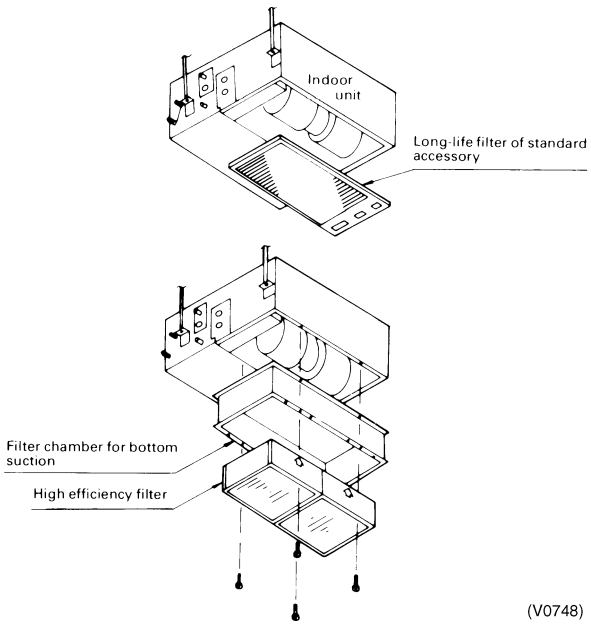

Note:
Refer to the appearance figure of optional accessory describing later for further details.

Air Suction Flange

When this kit will be used, the rear suction type's sealing plate will be required separately.

Specifications

Item	Model	Air Suction Flange			
		KDJ2507K36	KDJ2507K56	KDJ2507K80	KDJ2507K160
Dimensions (mm)	W	527	677	977	1377
	H	278			
	T	25			
Size of Connecting Duct (mm)	W	477	627	927	1327
	L	228			
Materials		Galvanized steel plate			
Applicable Model		20 · 25 · 32 Class	40 · 50 Class	63 Class	80 · 100 · 125 Class

Example of Installation

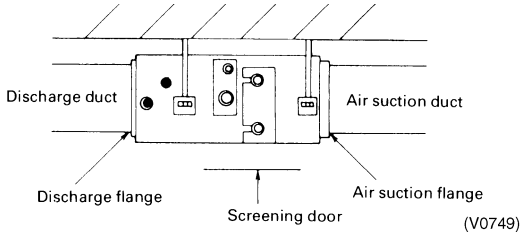

Blind Board (Screening Door) used for the rear-suction type

Specifications

Item	Model	KBBJ25K36	KBBJ25K56	KBBJ25K80	KBBJ25K160
Dimensions (mm)	W	535	685	985	1385
	D	404			
	T	10			
Materials		Galvanized Steel Plate			
Applicable Model		20 · 25 · 32 Class	40 · 50 Class	63 Class	80 · 100 · 125 Class

Dimension

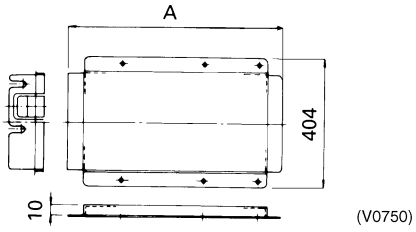

Applicable Model	A
KBBJ25K36	535
KBBJ25K56	685
KBBJ25K80	985
KBBJ25K160	1385

Installation

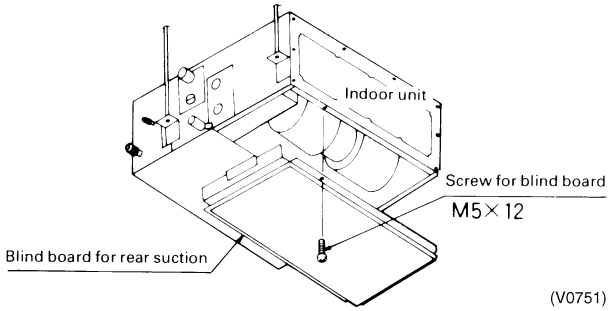

Dimensions with the Optional Accessories

Natural evaporating pan type humidifier (Discharge outlet adaptor)

■ **FXSQ20~32M**

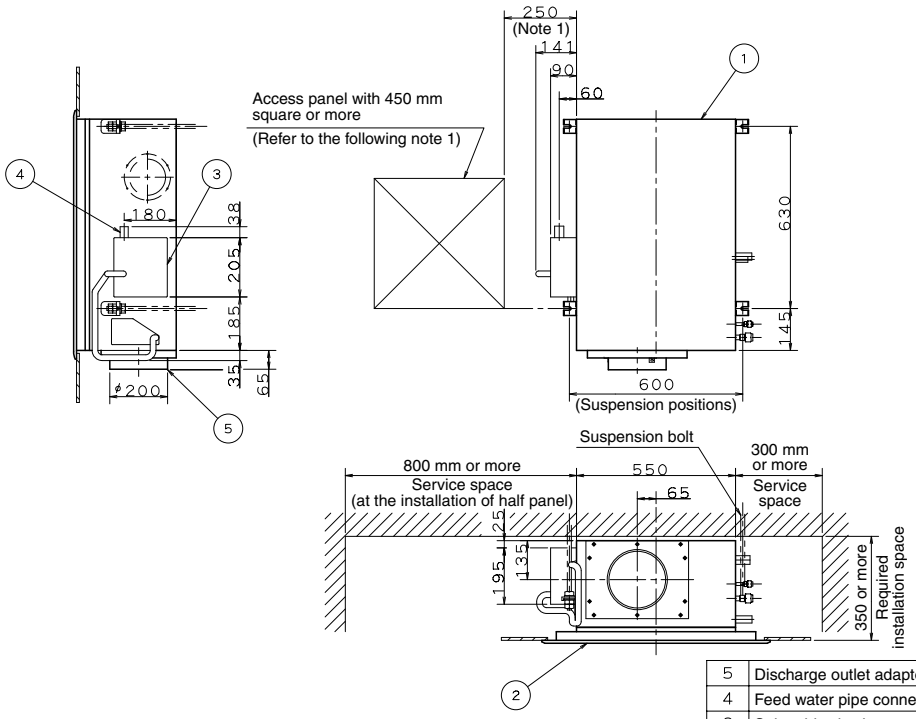

Number	Name	Description
5	Discharge outlet adaptor	
4	Feed water pipe connection	For natural evaporating pan type humidifier PT 1/2
3	Solenoid valve box	For natural evaporating pan type humidifier
2	Suction full panel	
1	Built-in unit body	

Note)
1. An access panel is needed when a half panel will be installed.
2. When optional accessory other than these kits will be built in, refer to external drawing with optional accessories.
3. Parts names ②~⑤ show optional accessories.

JC : DU220-245B

■ **FXSQ40 · 50M**

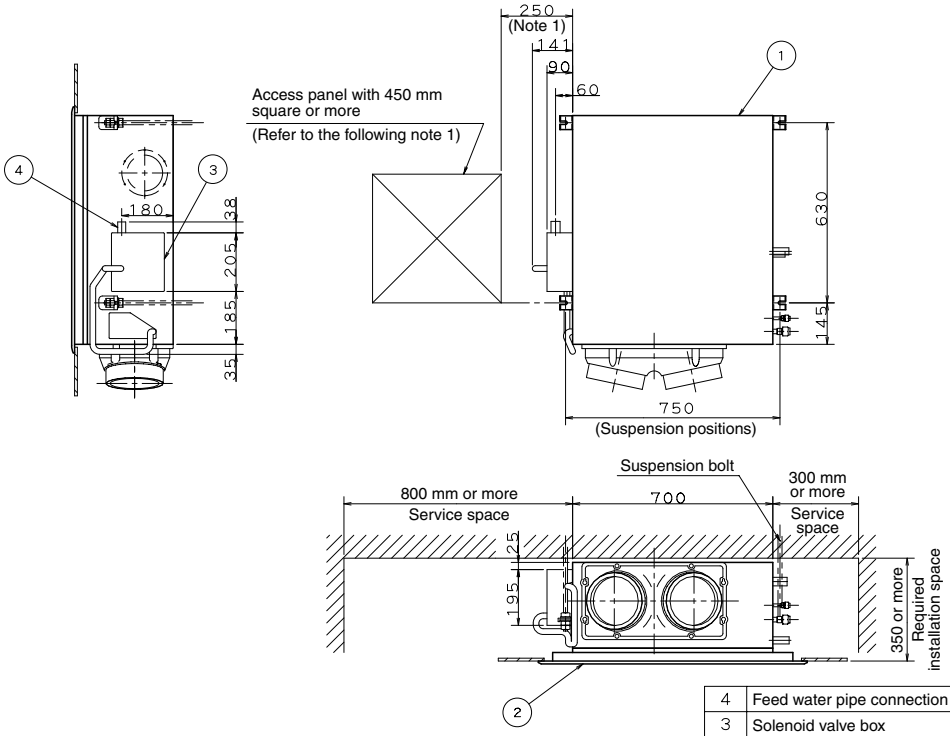

Number	Name	Description
4	Feed water pipe connection	For natural evaporating pan type humidifier PT 1/2
3	Solenoid valve box	For natural evaporating pan type humidifier
2	Suction full panel	
1	Built-in Hi type body	

Note)
1. An access panel is needed when a half panel will be installed.
2. When optional accessory other than these kits will be built in, refer to external drawing with optional accessories.
3. Parts names ②~④ show optional accessories.

JC : DU425-2111E

External drawing with optional accessories (Natural evaporating type humidifier) (Air Discharge Adaptor)

■ FXSQ63M

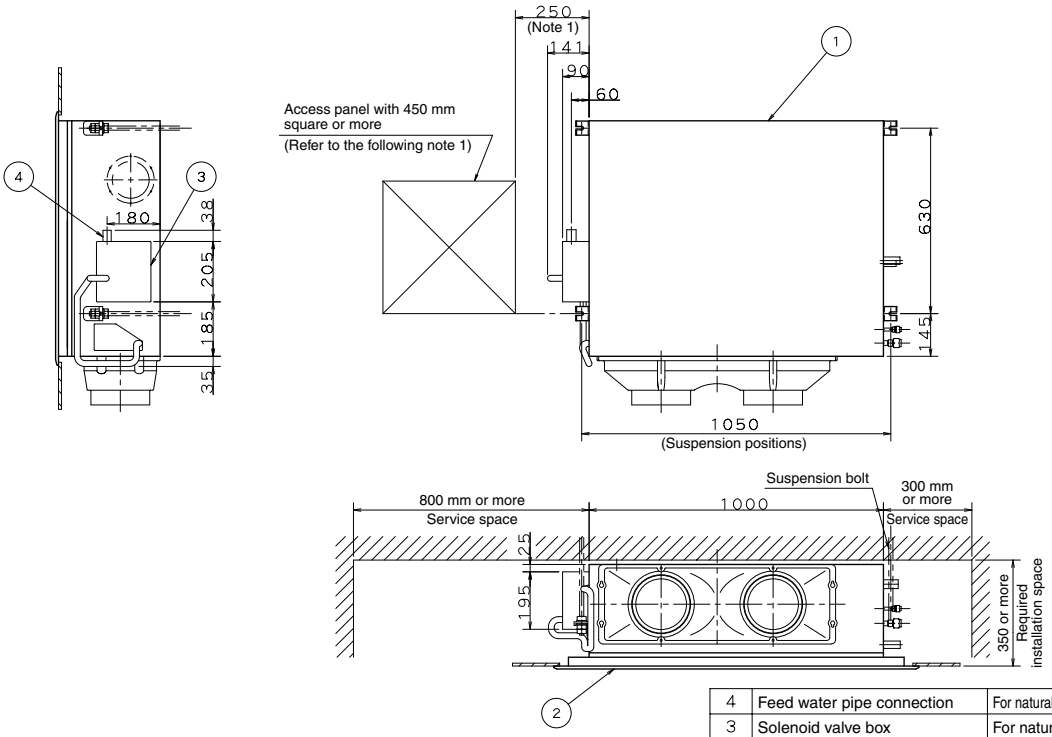

Number	Name	Description
4	Feed water pipe connection	For natural evaporating pan type humidifier PT 1/2
3	Solenoid valve box	For natural evaporating pan type humidifier
2	Suction full panel	
1	Built-in Hi type body	

Note)
1. An access panel is needed when a half panel will be installed.
2. When optional accessory other than these kits will be built in, refer to external drawing with optional accessories.
3. Parts names ②~④ show optional accessories.

JC : DU427-2192F

■ FXSQ80~125M

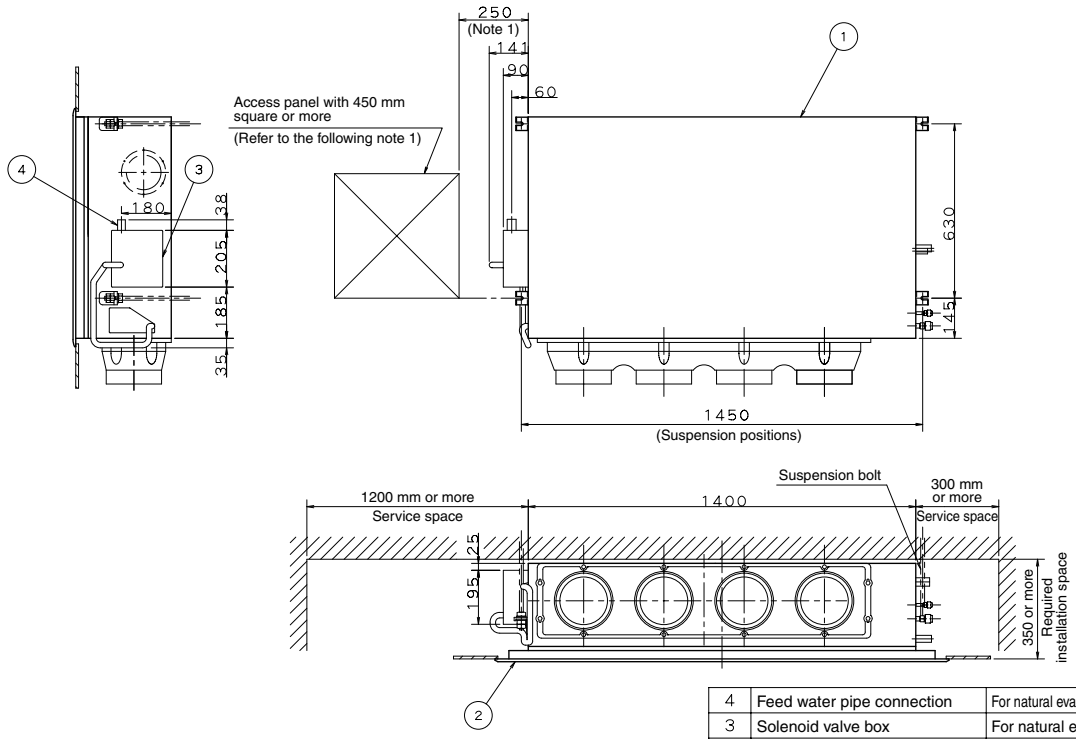

Number	Name	Description
4	Feed water pipe connection	For natural evaporating pan type humidifier PT 1/2
3	Solenoid valve box	For natural evaporating pan type humidifier
2	Suction full panel	
1	Built-in Hi type body	

Note)
1. An access panel is needed when a half panel will be installed.
2. When optional accessory other than these kits will be built in, refer to external drawing with optional accessories.
3. Parts names ②~④ show optional accessories.

JC : DU428-2158F

High Efficiency Filter (Air Discharge Adaptor)

■ FXSQ20~32M

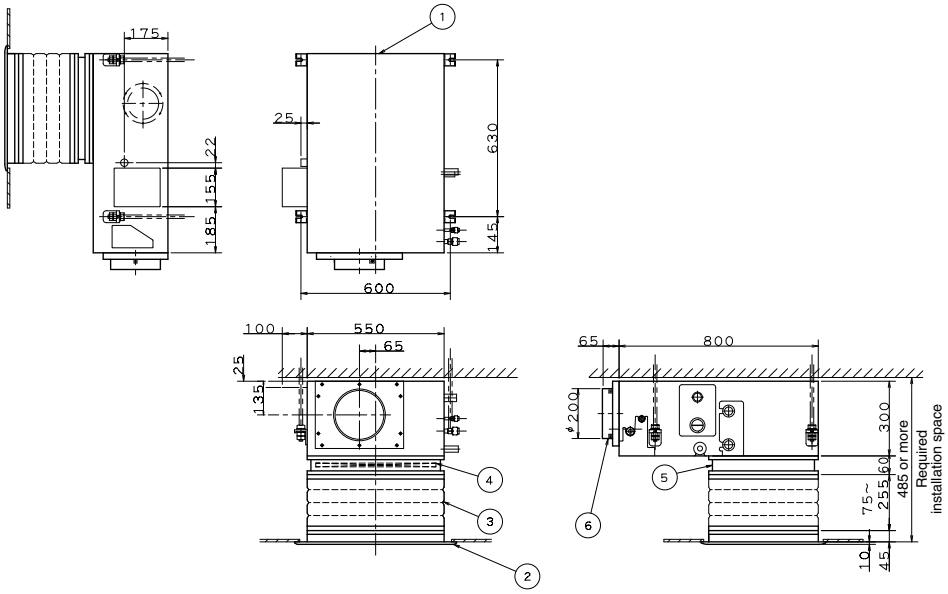

Number	Name	Description
6	Air discharge adaptor	
5	Bottom suction filter chamber	
4	High efficiency filter	
3	Air suction canvas	
2	Suction half panel	
1	Built-in unit body	

JC : DU820-238B

Note)
1. When optional accessory other than these kits will be built in, refer to the external drawing with optional accessories.
2. Parts names ②~⑧ show optional accessories.

■ FXSQ40 · 50M

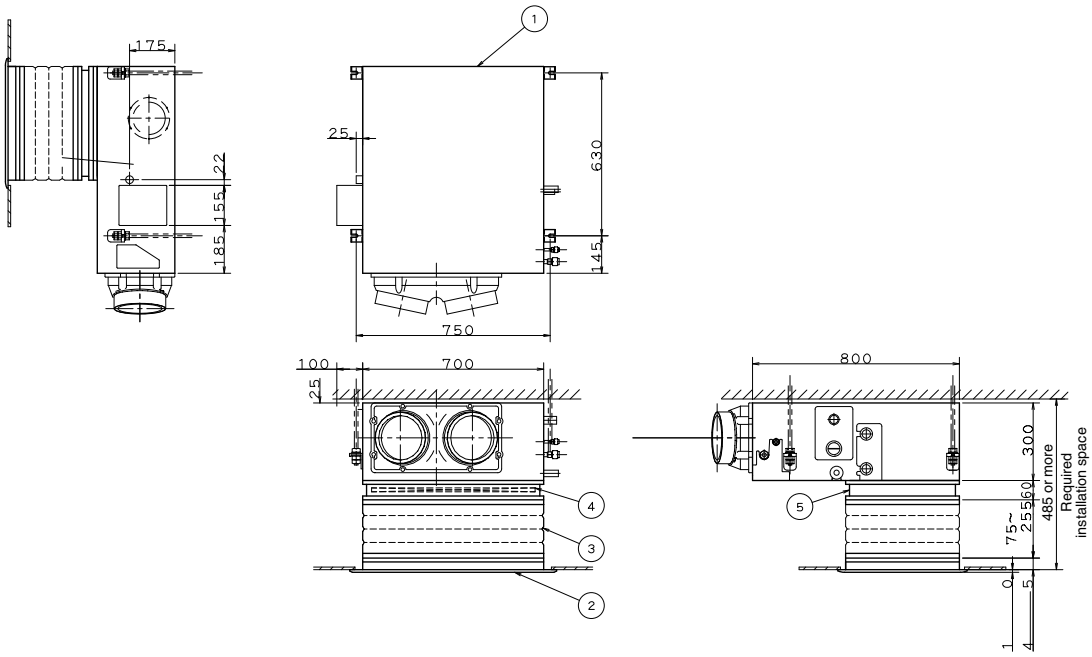

Number	Name	Description
5	Bottom suction filter chamber	
4	High efficiency filter	
3	Air suction canvas	
2	Suction half panel	
1	Built-in Hi type body	

JC : DU823-226E

Note)
1. When optional accessory other than these kits will be built in, refer to the external drawing with optional accessories.
2. Parts names ②~⑦ show optional accessories.

High Efficiency Filter

■ FXSQ63M

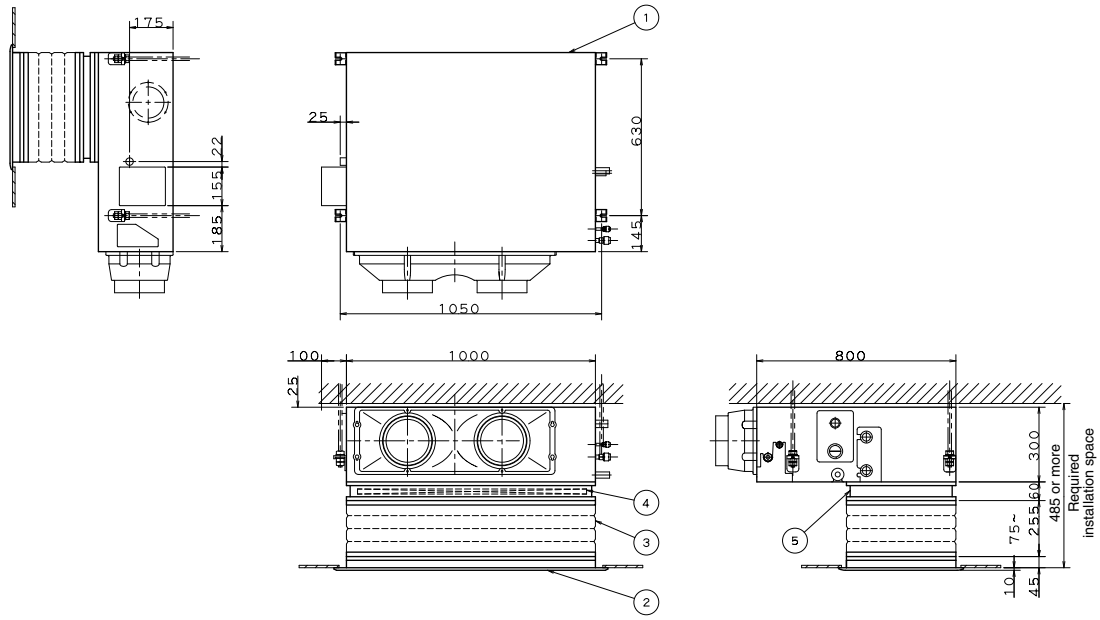

Number	Name	Description
5	Bottom suction filter chamber	
4	High efficiency filter	
3	Air suction canvas	
2	Suction half panel	
1	Built-in Hi type body	

JC : DU826-207F

Note)
1. When optional accessory other than these kits will be built in, refer to the external drawing with optional accessories.
2. Parts names ②~⑦ show optional accessories.

■ FXSQ80~125M

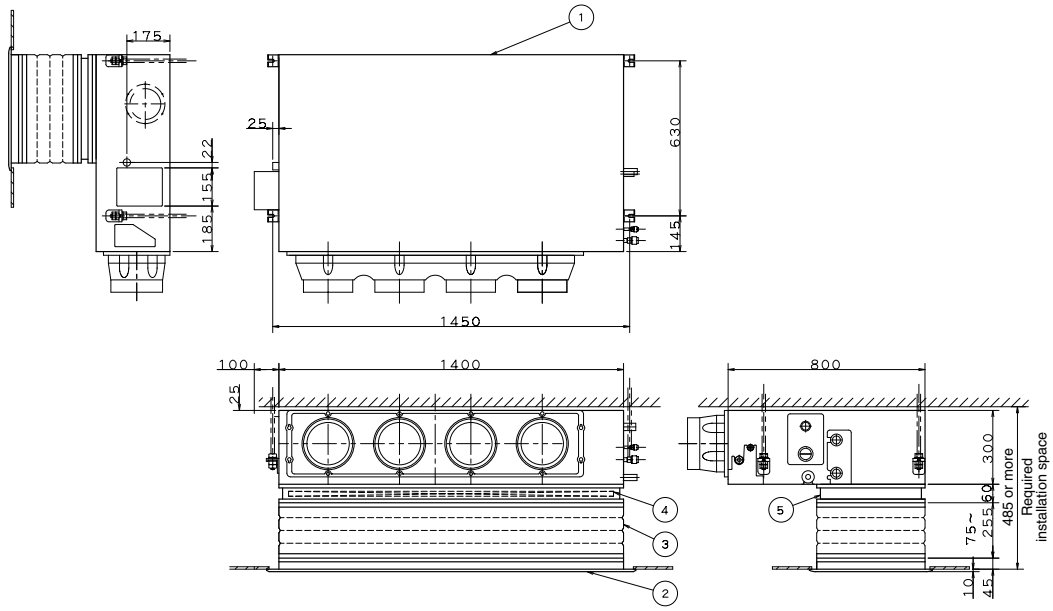

Number	Name	Description
5	Bottom suction filter chamber	
4	High efficiency filter	
3	Air suction canvas	
2	Suction half panel	
1	Built-in Hi type body	

JC : DU828-215F

Note)
1. When optional accessory other than these kits will be built in, refer to the external drawing with optional accessories.
2. Parts names ②~⑦ show optional accessories.

Duct Style Installation

■ FXSQ20~32M

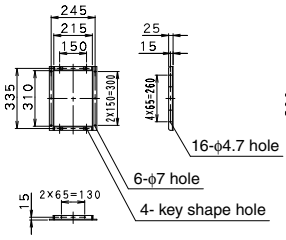

Details of discharge outlet flange

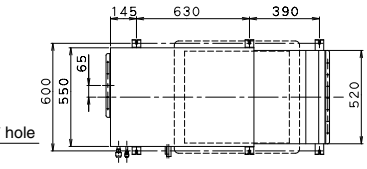

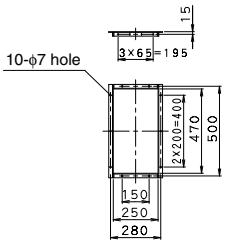

Suction flange
(filter chamber for rear-suction type) details

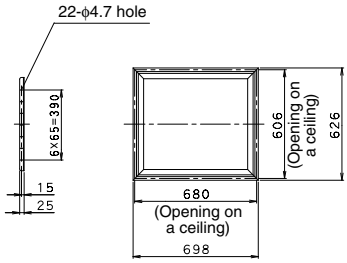

A view

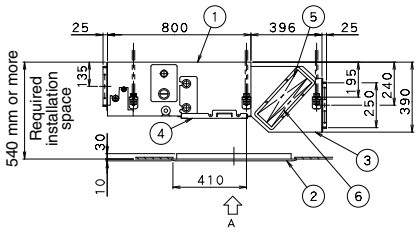

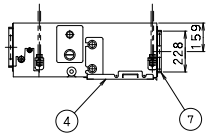

At installation of suction flange

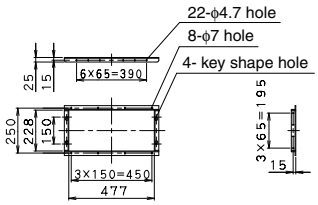

Suction flange details

Note)
1. When optional accessory other than these kits will be built in, refer to the external drawing with optional accessories.
2. Parts names ②~⑦ show optional accessories.

Number	Name	Description
7	Suction inlet flange	
6	Long life filter	
5	High efficiency filter	
4	Rear-suction sealing plate	
3	Rear-suction filter chamber	(with rear-suction sealing plate)
2	Access panel	
1	Built-in unit body	

JC : DU220-248B

■ FXSQ40 · 50M

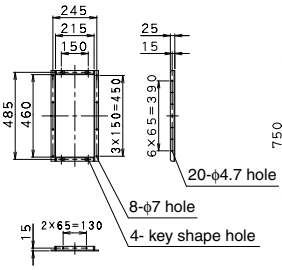

Details of discharge outlet flange

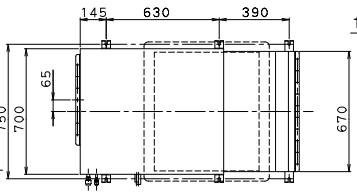

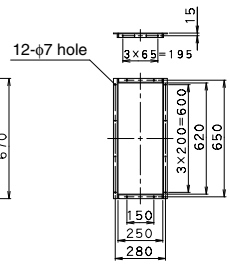

Suction flange
(filter chamber for rear-suction type) details

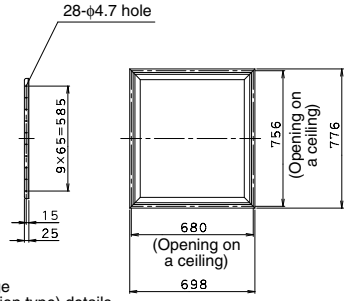

A view

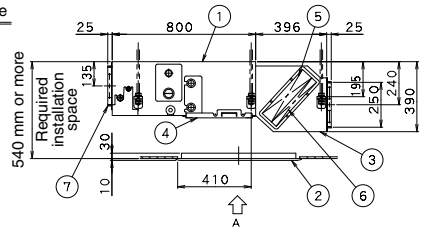

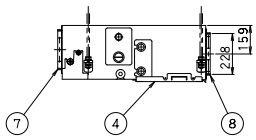

At installation of suction flange

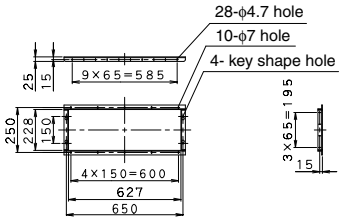

Suction flange details

Note)
1. When optional accessory other than these kits will be built in, refer to the external drawing with optional accessories.
2. Parts names ②~⑧ show optional accessories.

Number	Name	Description
8	Suction inlet flange	
7	Suction flange	
6	Long life filter	
5	High efficiency filter	
4	Rear-suction sealing plate	
3	Rear-suction filter chamber	(with rear-suction sealing plate)
2	Access panel	
1	Built-in Hi type body	

JC : DU425-2115E

Duct Style Installation

■ FXSQ63M

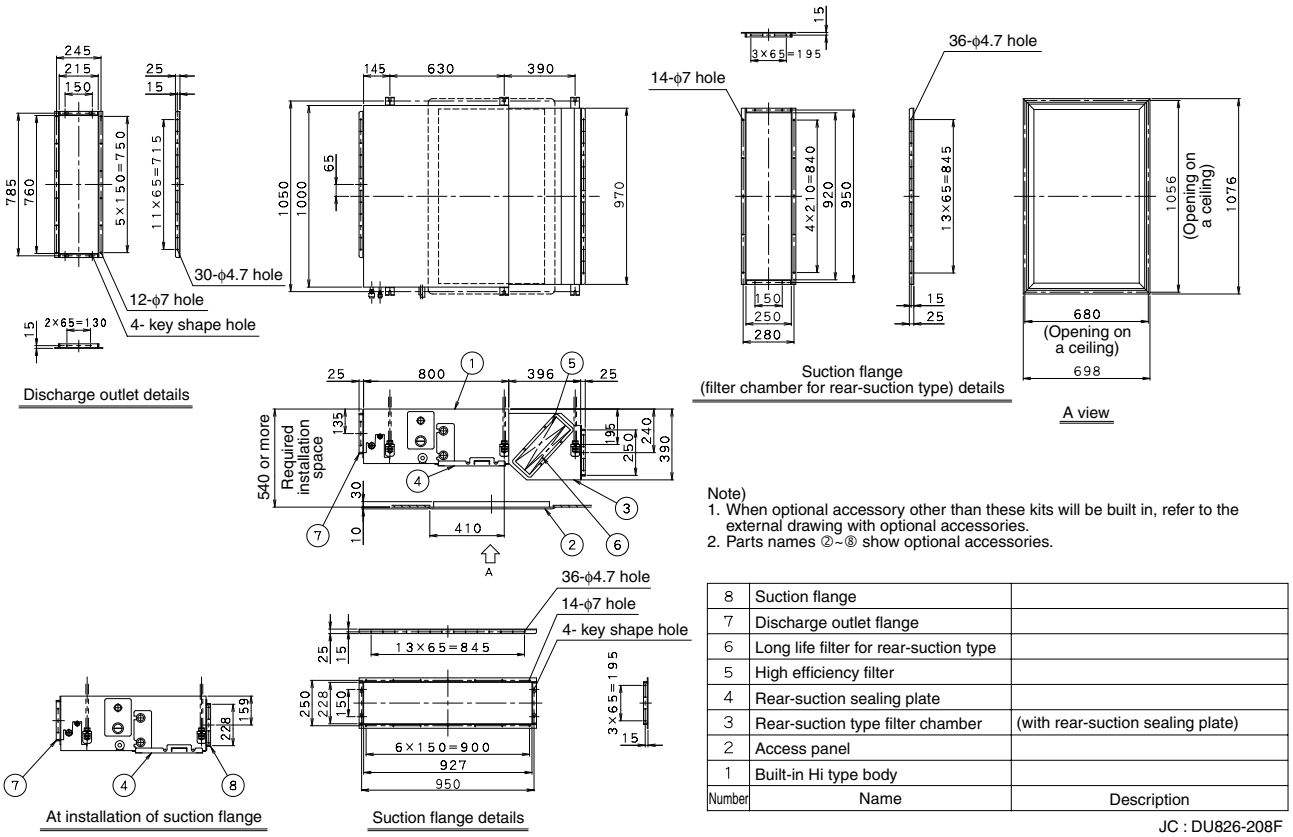

Note)
1. When optional accessory other than these kits will be built in, refer to the external drawing with optional accessories.
2. Parts names ②~⑧ show optional accessories.

Number	Name	Description
8	Suction flange	
7	Discharge outlet flange	
6	Long life filter for rear-suction type	
5	High efficiency filter	
4	Rear-suction sealing plate	
3	Rear-suction type filter chamber	(with rear-suction sealing plate)
2	Access panel	
1	Built-in Hi type body	

JC : DU826-208F

■ FXSQ80~125M

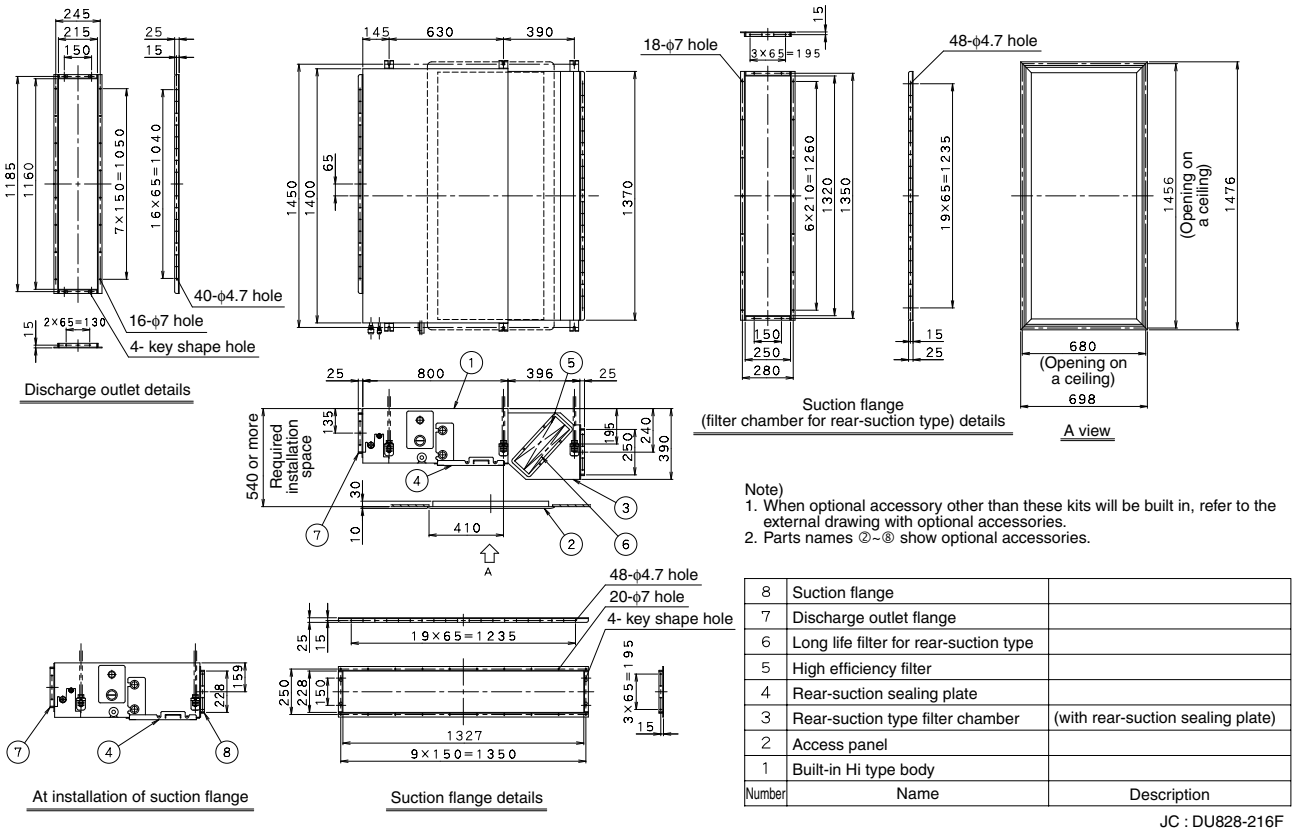

Note)
1. When optional accessory other than these kits will be built in, refer to the external drawing with optional accessories.
2. Parts names ②~⑧ show optional accessories.

Number	Name	Description
8	Suction flange	
7	Discharge outlet flange	
6	Long life filter for rear-suction type	
5	High efficiency filter	
4	Rear-suction sealing plate	
3	Rear-suction type filter chamber	(with rear-suction sealing plate)
2	Access panel	
1	Built-in Hi type body	

JC : DU828-216F

FXMQ-MA
Ceiling Mounted Duct Type

1. Features 214
2. Specifications 215
3. Dimensions 217
4. Piping Diagrams 221
5. Wiring Diagrams 222
6. Electric Characteristics 224
7. Capacity Tables 225
   7.1 Cooling Capacity 225
8. Fan Performances 226
   8.1 50Hz 226
9. Sound Levels 227
10. Installation 228
11. Accessories 232

1. Features

Ceiling mounted duct type is newly added to the line-up of the indoor unit for VRV series, which gives you much more flexibility in designing of the air conditioning system to satisfy the needs of individual air-conditioning even in the broad area.

■ **High external static pressure allows extensive duct work for flexible applications.**

Ceiling mounted duct type	
FXMQ40MA FXMQ50MA FXMQ63MA FXMQ80MA FXMQ100MA FXMQ125MA	FXMQ200MA FXMQ250MA

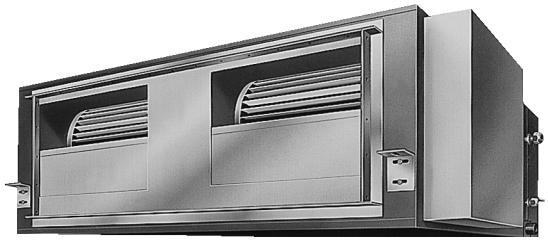

Wide line-up to increase the flexibility in system designing.

40~80 type

200 · 250 type

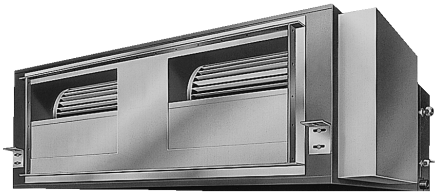

100 · 125 type

2. Specifications

Ceiling Mounted Duct Type

Model			FXMQ40MAVE	FXMQ50MAVE	FXMQ63MAVE	FXMQ80MAVE
∗1 Cooling Capacity (19.5°CWB)		kcal/h	4,000	5,000	6,300	8,000
		Btu/h	16,000	19,800	24,900	31,700
		kW	4.7	5.8	7.3	9.3
∗2 Cooling Capacity (19.0°CWB)		kW	4.5	5.6	7.1	9.0
Casing			Galvanized Steel Plate	Galvanized Steel Plate	Galvanized Steel Plate	Galvanized Steel Plate
Dimensions: (H×W×D)		mm	390×720×690	390×720×690	390×720×690	390×720×690
Coil (Cross Fin Coil)	Rows×Stages×Fin Pitch	mm	3×16×2.0	3×16×2.0	3×16×2.0	3×16×2.0
	Face Area	m²	0.181	0.181	0.181	0.181
Fan	Model		D11/2D3AB1VE	D11/2D3AB1VE	D11/2D3AB1VE	D11/2D3AA1VE
	Type		Sirocco Fan	Sirocco Fan	Sirocco Fan	Sirocco Fan
	Motor Output × Number of Units	W	100×1	100×1	100×1	160×1
	Air Flow Rate (H/L)	m³/min	14/11.5	14/11.5	14/11.5	19.5/16
		cfm	494/406	494/406	494/406	688/565
	External Static Pressure 50Hz	Pa	157-118 ∗3	157-118 ∗3	157-118 ∗3	157-108 ∗3
	Drive		Direct Drive	Direct Drive	Direct Drive	Direct Drive
Temperature Control			Microprocessor Thermostat for Cooling and Heating	Microprocessor Thermostat for Cooling and Heating	Microprocessor Thermostat for Cooling and Heating	Microprocessor Thermostat for Cooling and Heating
Sound Absorbing Thermal Insulation Material			Glass Fiber	Glass Fiber	Glass Fiber	Glass Fiber
Air Filter			∗4	∗4	∗4	∗4
Piping Connections	Liquid Pipes	mm	ϕ6.4 (Flare Connection)	ϕ6.4 (Flare Connection)	ϕ9.5 (Flare Connection)	ϕ9.5 (Flare Connection)
	Gas Pipes	mm	ϕ12.7 (Flare Connection)	ϕ12.7 (Flare Connection)	ϕ15.9 (Flare Connection)	ϕ15.9 (Flare Connection)
	Drain Pipe	mm	VP25 (External Dia. 32 Internal Dia. 25)	VP25 (External Dia. 32 Internal Dia. 25)	VP25 (External Dia. 32 Internal Dia. 25)	VP25 (External Dia. 32 Internal Dia. 25)
Machine Weight (Mass)		kg	44	44	44	45
∗6 Sound Level (H/L) (220V)		dBA	39/35	39/35	39/35	42/38
Safety Devices			Fuse. Thermal Fuse for Fan Motor.	Fuse. Thermal Fuse for Fan Motor.	Fuse. Thermal Fuse for Fan Motor.	Fuse. Thermal Fuse for Fan Motor.
Refrigerant Control			Electronic Expansion Valve	Electronic Expansion Valve	Electronic Expansion Valve	Electronic Expansion Valve
Connectable Outdoor Unit			R-410A P Series	R-410A P Series	R-410A P Series	R-410A P Series
Standard Accessories			Operation Manual. Installation Manual. Drain Hose. Clamp Metal. Insulation for Fitting. Sealing Pads. Clamps. Screws.	Operation Manual. Installation Manual. Drain Hose. Clamp Metal. Insulation for Fitting. Sealing Pads. Clamps. Screws.	Operation Manual. Installation Manual. Drain Hose. Clamp Metal. Insulation for Fitting. Sealing Pads. Clamps. Screws.	Operation Manual. Installation Manual. Drain Hose. Clamp Metal. Insulation for Fitting. Sealing Pads. Clamps. Screws.
Drawing No.			C : 3D038814A			

Note:

∗1 Indoor temp. : 27°CDB, 19.5°CWB / outdoor temp. : 35°CDB / Equivalent piping length : 7.5 m, level difference : 0 m.
∗2 Indoor temp. : 27°CDB, 19.0°CWB / outdoor temp. : 35°CDB / Equivalent piping length : 7.5 m, level difference : 0 m.
∗3 External static pressure is changeable to change over the connectors inside electrical box, this pressure means "High static pressure-Standard".
∗4 Air filter is not standard accessory, but please mount it in the duct system of the suction side. Select its colorimetric method (gravity method) 50% or more.
5 Capacities are net, including a deduction for cooling (an addition for heating) for indoor fan motor heat.
∗6 Anechoic chamber conversion value, measured at a point 1.5 m downward from the unit center. These values are normally somewhat higher during actual operation as a result of ambient conditions.
7 Refer to page 224 for Fan Motor Input.

Conversion Formulae
kcal/h=kW×860 Btu/h=kW×3412 cfm=m³/min×35.3

7

Ceiling Mounted Duct Type

Model			FXMQ100MAVE	FXMQ125MAVE	FXMQ200MAVE	FXMQ250MAVE
∗1 Cooling Capacity (19.5°CWB)		kcal/h	10,000	12,500	19,800	24,800
		Btu/h	39,600	49,500	78,500	98,300
		kW	11.6	14.5	23.0	28.8
∗2 Cooling Capacity (19.0°CWB)		kW	11.2	14.0	22.4	28.0
Casing			Galvanized Steel Plate	Galvanized Steel Plate	Galvanized Steel Plate	Galvanized Steel Plate
Dimensions: (H×W×D)		mm	390×1,110×690	390×1,110×690	470×1,380×1,100	470×1,380×1,100
Coil (Cross Fin Coil)	Rows×Stages×Fin Pitch	mm	3×16×2.0	3×16×2.0	3×26×2.0	3×26×2.0
	Face Area	m²	0.319	0.319	0.68	0.68
Fan	Model		2D11/2D3AG1VE	2D11/2D3AF1VE	D13/4G2DA1×2	D13/4G2DA1×2
	Type		Sirocco Fan	Sirocco Fan	Sirocco Fan	Sirocco Fan
	Motor Output × Number of Units	W	270×1	430×1	380×2	380×2
	Air Flow Rate (H/L)	m³/min	29/23	36/29	58/50	72/62
		cfm	1,024/812	1,271/1,024	2,047/1,765	2,542/2,189
	External Static Pressure 50Hz	Pa	157-98 ∗3	191-152 ∗3	221-132 ∗3	270-147 ∗3
	Drive		Direct Drive	Direct Drive	Direct Drive	Direct Drive
Temperature Control			Microprocessor Thermostat for Cooling and Heating	Microprocessor Thermostat for Cooling and Heating	Microprocessor Thermostat for Cooling and Heating	Microprocessor Thermostat for Cooling and Heating
Sound Absorbing Thermal Insulation Material			Glass Fiber	Glass Fiber	Glass Fiber	Glass Fiber
Air Filter			∗4	∗4	∗4	∗4
Piping Connections	Liquid Pipes	mm	ϕ9.5 (Flare Connection)	ϕ9.5 (Flare Connection)	ϕ9.5 (Flare Connection)	ϕ9.5 (Flare Connection)
	Gas Pipes	mm	ϕ15.9 (Flare Connection)	ϕ15.9 (Flare Connection)	ϕ19.1(Brazing Connection)	ϕ22.2 (Brazing Connection)
	Drain Pipe	mm	VP25 (External Dia. 32 Internal Dia. 25)	VP25 (External Dia. 32 Internal Dia. 25)	PS1B	PS1B
Machine Weight (Mass)		kg	63	65	137	137
∗6 Sound Level (H/L) (220V)		dBA	43/39	45/42	48/45	48/45
Safety Devices			Fuse. Thermal Fuse for Fan Motor.	Fuse. Thermal Fuse for Fan Motor.	Fuse. Thermal Protector for Fan Motor.	Fuse. Thermal Protector for Fan Motor.
Refrigerant Control			Electronic Expansion Valve	Electronic Expansion Valve	Electronic Expansion Valve	Electronic Expansion Valve
Connectable Outdoor Unit			R-410A P Series	R-410A P Series	R-410A P Series	R-410A P Series
Standard Accessories			Operation Manual. Installation Manual. Drain Hose. Clamp Metal. Insulation for Fitting. Sealing Pads. Clamps. Screws.	Operation Manual. Installation Manual. Drain Hose. Clamp Metal. Insulation for Fitting. Sealing Pads. Clamps. Screws.	Operation Manual. Installation Manual. Sealing Pads. Connection Pipes. Screws. Clamps.	Operation Manual. Installation Manual. Sealing Pads. Connection Pipes. Screws. Clamps.
Drawing No.			C : 3D038814A			

Note:

∗1 Indoor temp. : 27°CDB, 19.5°CWB / outdoor temp. : 35°CDB / Equivalent piping length : 7.5 m, level difference : 0 m.
∗2 Indoor temp. : 27°CDB, 19.0°CWB / outdoor temp. : 35°CDB / Equivalent piping length : 7.5 m, level difference : 0 m.
∗3 External static pressure is changeable to change over the connectors inside electrical box, this pressure means "High static pressure-Standard".
∗4 Air filter is not standard accessory, but please mount it in the duct system of the suction side. Select its colorimetric method (gravity method) 50% or more.
5 Capacities are net, including a deduction for cooling (an addition for heating) for indoor fan motor heat.
∗6 Anechoic chamber conversion value, measured at a point 1.5 m downward from the unit center. These values are normally somewhat higher during actual operation as a result of ambient conditions.
7 Refer to page 224 for Fan Motor Input.

Conversion Formulae
kcal/h=kW×860 Btu/h=kW×3412 cfm=m³/min×35.3

3. Dimensions

FXMQ40MA
FXMQ50MA

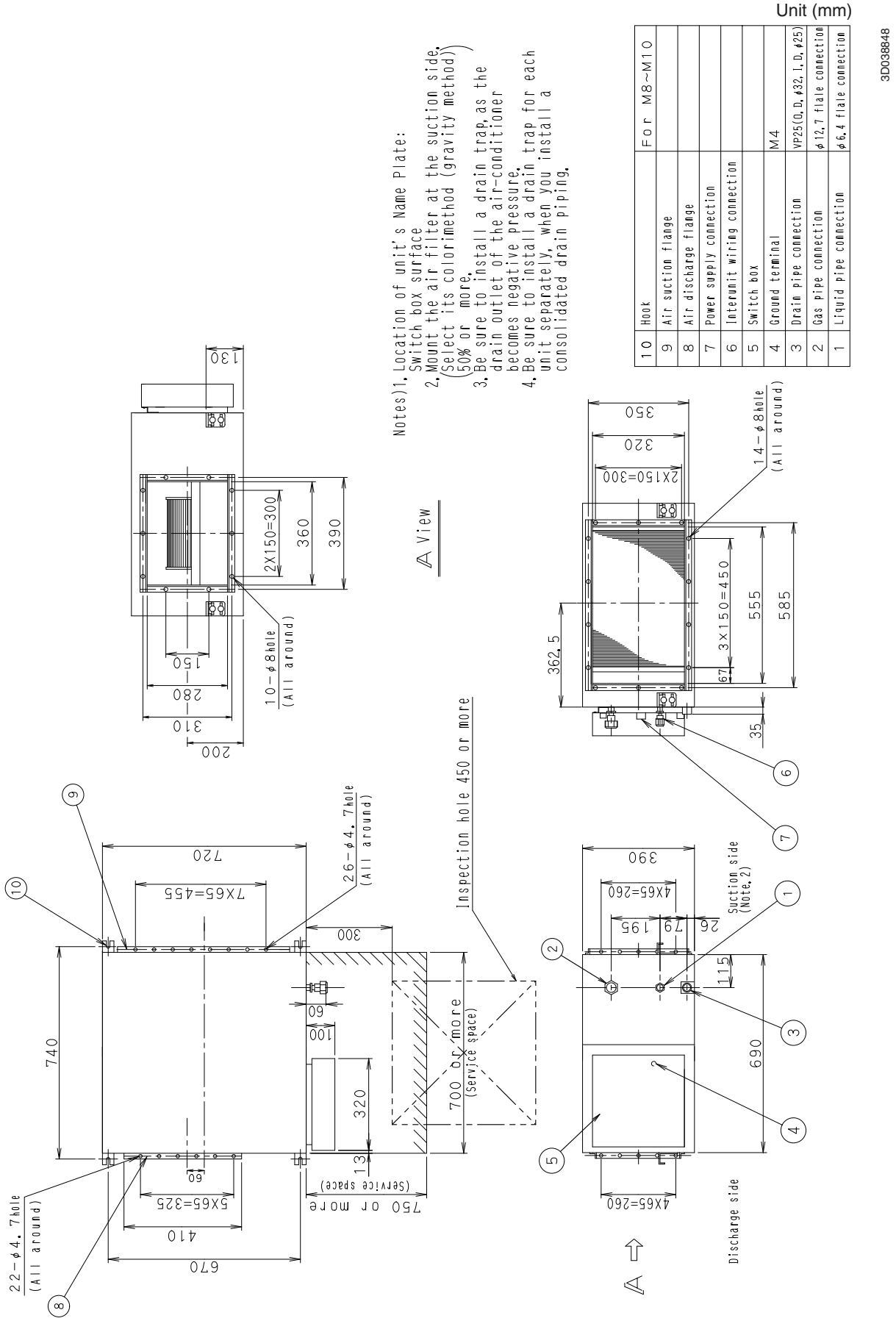

FXMQ63MA
FXMQ80MA

Unit (mm)

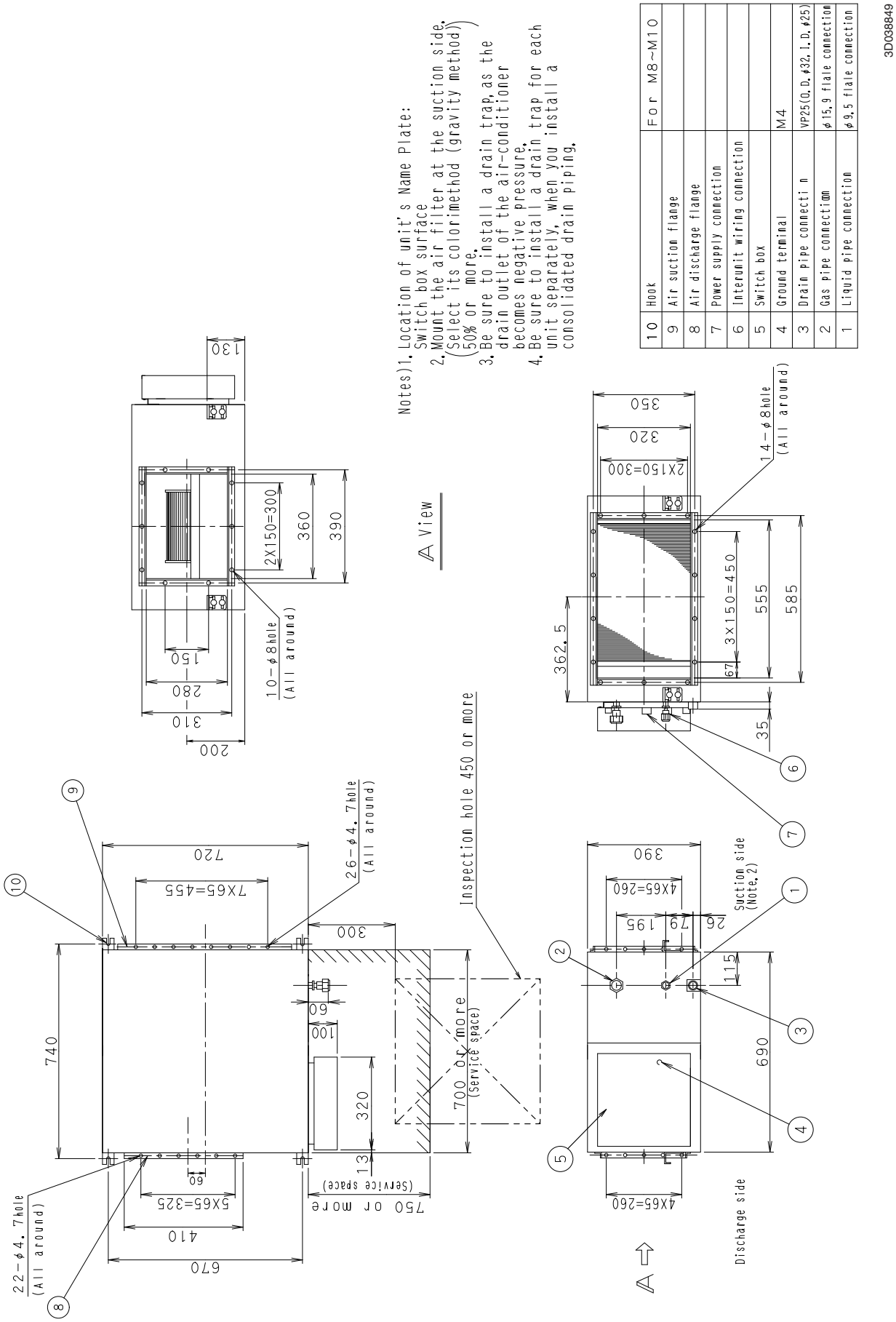

FXMQ100MA
FXMQ125MA

Unit (mm)

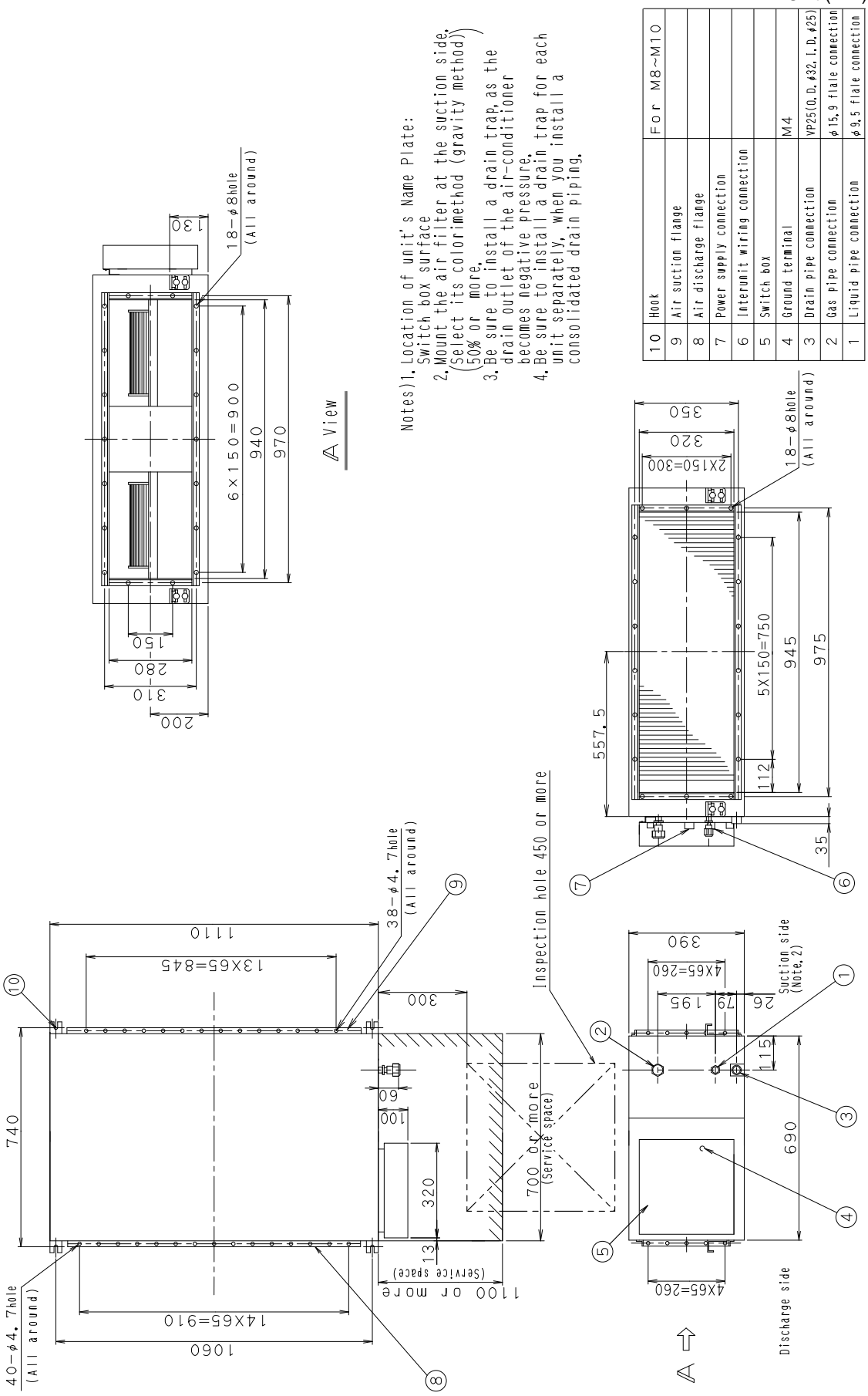

FXMQ200MA
FXMQ250MA

Unit (mm)

3D038851

13	Water supply port	
12	Drain piping connection	PS1B Internal thread Major dia. φ33.249, Minor dia. φ30.991
11	Name plate	
10	Attached piping	Brazing
9	Suction flange	
8	Discharge companion flange	
7	Hook	M10
6	Transmission wiring connection	
5	Power supply wiring connection	
4	Switch box	
3	Ground terminal	M5(Inside switch box)
2	Gas pipe connection	Attendant piping connection
1	Liquid pipe connection	Flare connection

Piping size (Field supply)

Indoor unit	Gas side	Liquid side
FXMQ200MVE	φ19.1attached piping	φ9.5
FXMQ250MVE	φ22.2attached piping	φ9.5

Notes) 1. Location of unit's Name Plates: Switch box surface
2. Mount the air filter at the suction side. (Select its colorimetho d (gravity method) 50% or more.)

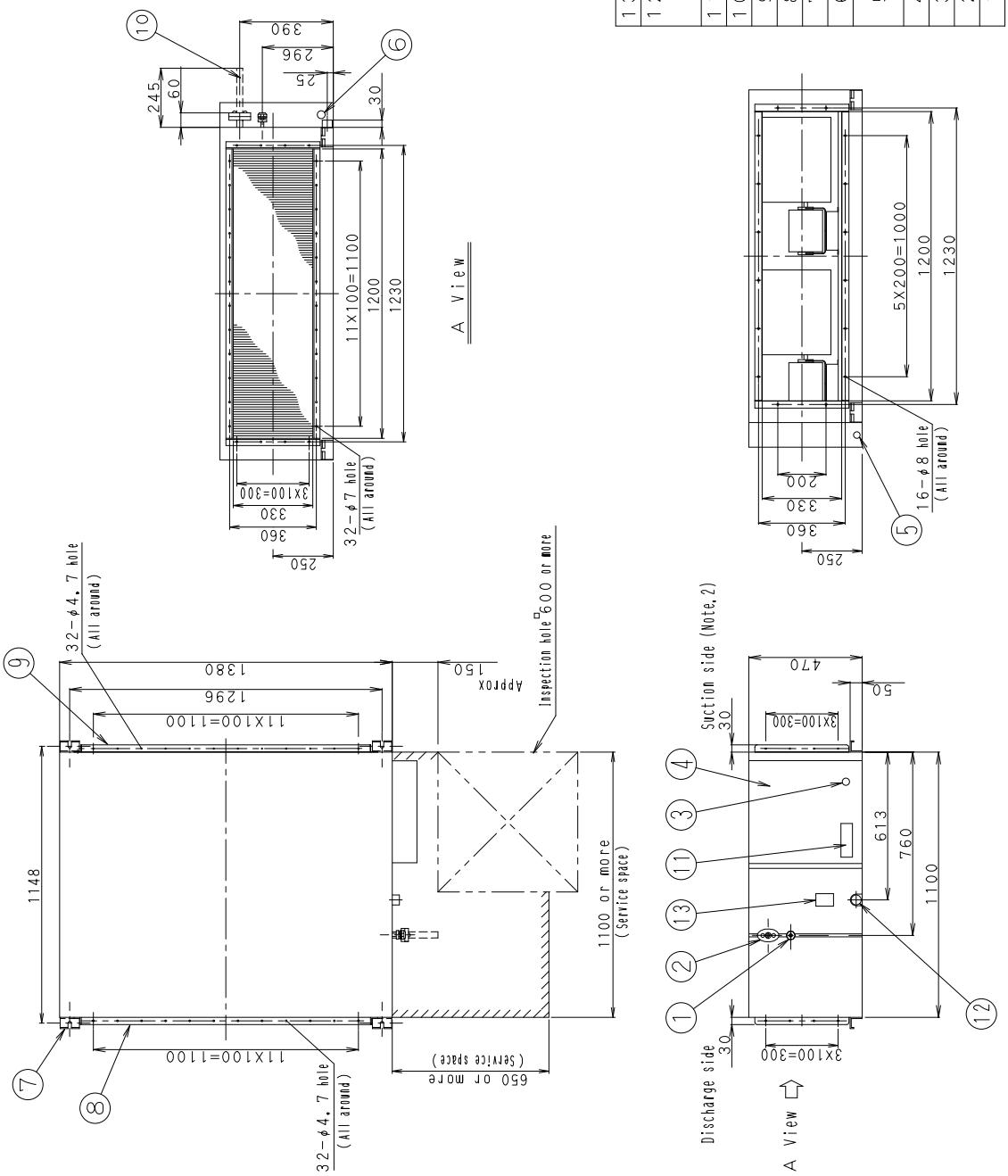

4. Piping Diagrams

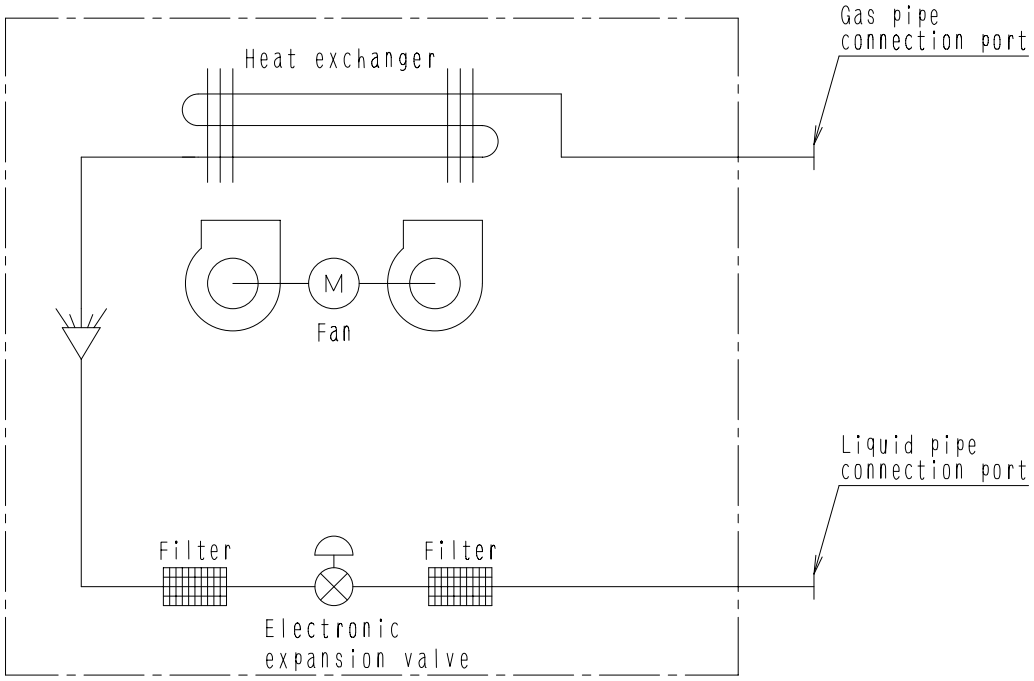

4D034245B

■ **Refrigerant pipe connection port diameters**

(mm)

Model	Gas	Liquid
FXMQ40 · 50MA	ϕ12.7	ϕ6.4
FXMQ63 · 80 · 100 · 125MA	ϕ15.9	ϕ9.5
FXMQ200MA	ϕ19.1	
FXMQ250MA	ϕ22.2	

5. Wiring Diagrams

FXMQ40 · 50 · 63 · 80 · 100 · 125MAVE

3D039620B

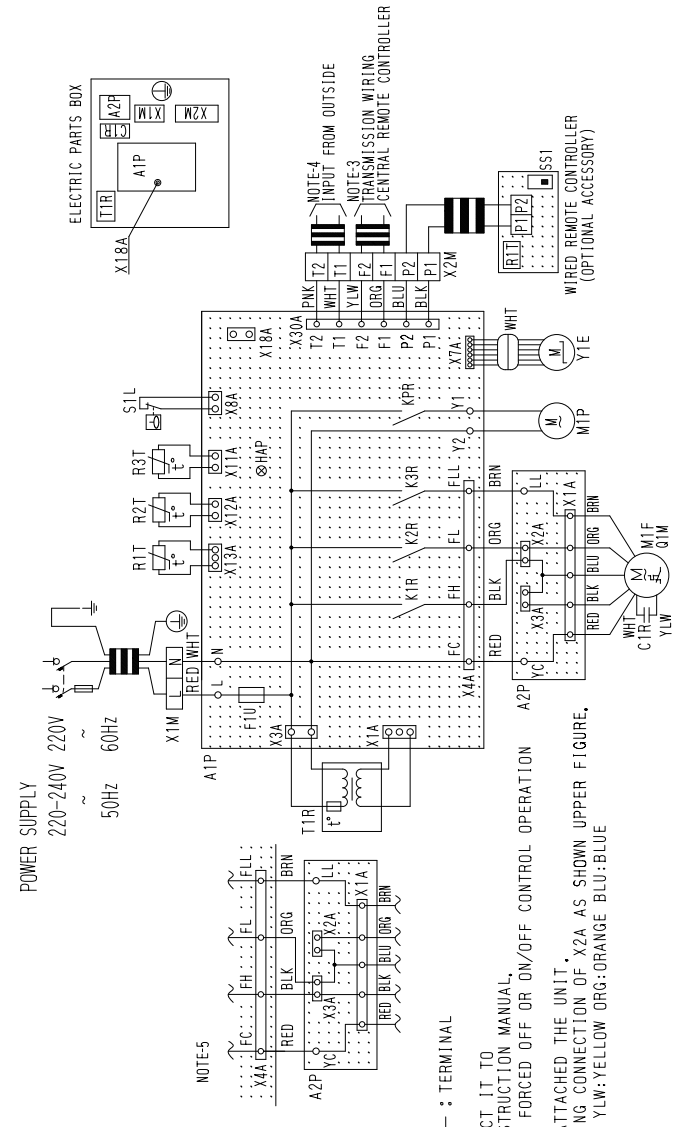

	INDOOR UNIT		R1T	THERMISTOR(AIR)
A1P	PRINTED CIRCUIT BOARD		R2T・R3T	THERMISTOR(COIL)
A2P	TERMINAL BOARD		S1L	FLOAT SWITCH
C1R	CAPACITOR(M1F)		T1R	TRANSFORMER(220-240V/22V)
F1U	FUSE(Ⓑ,5A,250V)	40・50・63・80TYPE	X1M	TERMINAL BLOCK(POWER)
F1U	FUSE(Ⓑ,10A,250V)	100・125TYPE	X2M	TERMINAL BLOCK(CONTROL)
HAP	LIGHT EMITTING DIODE	(SERVICE MONITOR-GREEN)	Y1E	ELECTRONIC EXPANSION VALVE
K1R-K3R	MAGNETIC RELAY(M1F)			OPTIONAL PARTS
KPR	MAGNETIC RELAY(M1P)		M1P	MOTOR (DRAIN PUMP)
M1F	MOTOR(INDOOR FAN)		WIRED	REMOTE CONTROLLER
Q1M	THERMO SWITCH (M1F EMBEDDED)		SS1	SELECTOR SWITCH (MAIN/SUB)
			R1T	THERMISTOR(AIR)
			CONNECTOR FOR OPTIONAL PARTS	
			X18A	CONNECTOR(WIRING ADAPTOR FOR ELECTORICAL APPENDICES)

NOTES)
1. ▭ :TERMINAL BLOCK, ▭, ⊃— :CONNECTOR, —○— : TERMINAL
2. ▬ :FIELD WIRING
3. IN CASE USING CENTRAL REMOTE CONTROLLER, CONNECT IT TO THE UNIT IN ACCORDANCE WITH THE ATTACHED INSTRUCTION MANUAL.
4. WHEN CONNECTING THE INPUT WIRES FROM OUTSIDE, FORCED OFF OR ON/OFF CONTROL OPERATION CAN BE SELECTED BY REMOTE CONTROLLER. IN DETAILS, REFER TO THE INSTALLATION MANUAL ATTACHED THE UNIT.
5. IN CASE HIGH E,S,P, OPERATION, CHANGE THE WIRING CONNECTION OF X2A AS SHOWN UPPER FIGURE.
6. SYMBOLS SHOW AS FOLLOWS, (PNK:PINK WHT:WHITE YLW:YELLOW ORG:ORANGE BLU:BLUE BLK:BLACK RED:RED BRN:BROWN)
7. USE COPPER CONDUCTORS ONLY.

FXMQ200 · 250MAVE

3D039621B

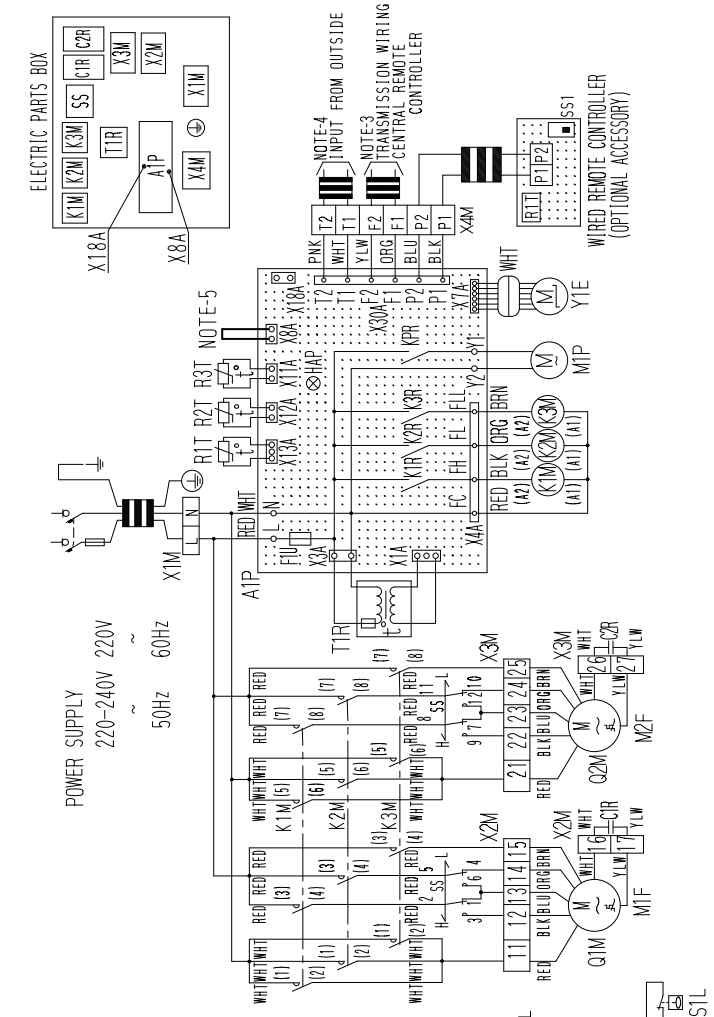

INDOOR UNIT		R1T	THERMISTOR(AIR)
A1P	PRINTED CIRCUIT BOARD	R2T・R3T	THERMISTOR(COIL)
C1R・C2R	CAPACITOR (M1F・2F)	SS	SELECTOR SWITCH (STATIC PRESSURE)
F1U	FUSE(Ⓑ,5A, 250V)	T1R	TRANSFORMER(220-240V/22V)
HAP	LIGHT EMITTING DIODE (SERVICE MONITOR-GREEN)	X1M	TERMINAL BLOCK(POWER)
K1M	MAGNETIC CONTACTOR(M1F・2F)	X2M-X3M	TERMINAL BLOCK
K2M	MAGNETIC CONTACTOR(M1F・2F)	X4M	TERMINAL BLOCK(CONTROL)
K3M	MAGNETIC CONTACTOR(M1F・2F)	Y1E	ELECTRONIC EXPANSION VALVE
K1R-K3R	MAGNETIC RELAY(M1F・2F)	OPTIONAL PARTS	
KPR	MAGNETIC RELAY(M1P)	M1P	MOTOR (DRAIN PUMP)
M1F・M2F	MOTOR (INDOOR FAN)	WIRED REMOTE CONTROLLER	
Q1M・Q2M	THERMO SWITCH (M1F・2F EMBEDDED)	R1T	THERMISTOR(AIR)
		SS1	SELECTOR SWITCH(MAIN/SUB)
		CONNECTOR FOR OPTIONAL PARTS	
		X8A	CONNECTOR(FLOAT SWITCH)
		X18A	CONNECTOR(WIRING ADAPTOR FOR ELECTORICAL APPENDICES)

NOTES)
1. ▭▭ : TERMINAL BLOCK
   ▭, ▭ : CONNECTOR
   ▭ : SHORT CIRCUIT CONNECTOR
   —○— : TERMINAL
2. ═══ : FIELD WIRING
3. IN CASE USING CENTRAL REMOTE CONTROLLER, CONNECT IT TO THE THE UNIT IN ACCORDANCE WITH THE ATTACHED INSTRUCTION MANUAL.
4. WHEN CONNECTING THE INPUT WIRES FROM OUTSIDE, FORCED OFF OR ON/OFF CONTROL OPERATION CAN BE SELECTED BY REMOTE CONTROLLER, IN DETAILS, REFER TO THE INSTALLATION MANUAL ATTACHED THE UNIT.
5. IN CASE INSTALLING THE DRAIN PUMP, REMOVE THE SHORT CIRCUIT CONNECTOR OF X8A AND EXECUTE THE ADDITIONAL WIRING FOR FLOAT SWITCH AND DRAIN PUMP.
6. SYMBOLS SHOW AS FOLLOWS, (PNK:PINK WHT:WHITE YLW:YELLOW ORG:ORANGE BLU:BLUE BLK:BLACK RED:RED BRN:BROWN)
7. USE COPPER CONDUCTORS ONLY.
8. IN CASE HIGH E.S.P. OPERATION , CHANGE THE SWITCH(SS) FOR "H".

6. Electric Characteristics

Units					Power supply		IFM		Input(W)	
Model	Type	Hz	Volts	Voltage range	MCA	MFA	KW	FLA	Cooling	Heating
FXMQ40・50・63MA	VE	50	220-240	MAX. 264 Min. 198	1.3	15	0.100	1.0	211	211
FXMQ80MA					1.5	15	0.160	1.2	284	284
FXMQ100MA					2.5	15	0.270	2.0	411	411
FXMQ125MA					3.8	15	0.430	3.0	619	619
FXMQ200MA					8.1	15	0.380×2	6.5	1294	1294
FXMQ250MA					9.0	15	0.380×2	7.2	1465	1465

Symbols:

MCA : Min. Circuit Amps (A)
MFA : Max. Fuse Amps (See note 5)
KW : Fan Motor Rated Output(KW)
FLA : Full Load Amps(A)
IFM : Indoor Fan Motor

Note:

1. Voltage range

   Units are suitable for use on electrical systems where voltage supplied to unit terminals is not below or above listed range limits.

2. Maximum allowable voltage unbalance between phases is 2%.

3. MCA/MFA

   MCA = 1.25 X FLA

   MFA ≦ 4 X FLA
   (Next lower standard fuse rating. Min.15A)

4. Select wire size based on the MCA.

5. Instead of fuse, use Circuit Breaker.

C : 4D040330A

7. Capacity Tables

7.1 Cooling Capacity

FXMQ-MA [50Hz]

Cooling capacity

Unit Size	Outdoor air temp. °CDB	Indoor air temp. 14.0°CWB 20°CDB TC	SC	16.0°CWB 23°CDB TC	SC	18.0°CWB 26°CDB TC	SC	19.0°CWB 27°CDB TC	SC	20.0°CWB 28°CDB TC	SC	22.0°CWB 30°CDB TC	SC	24.0°CWB 32°CDB TC	SC
40	10.0	3.0	2.9	3.6	3.1	4.2	3.5	4.5	3.5	4.8	3.6	5.4	3.7	5.9	3.7
	12.0	3.0	2.9	3.6	3.1	4.2	3.5	4.5	3.5	4.8	3.6	5.4	3.7	5.8	3.7
	14.0	3.0	2.9	3.6	3.1	4.2	3.5	4.5	3.5	4.8	3.6	5.4	3.7	5.8	3.7
	16.0	3.0	2.9	3.6	3.1	4.2	3.5	4.5	3.5	4.8	3.6	5.4	3.7	5.7	3.6
	18.0	3.0	2.9	3.6	3.1	4.2	3.5	4.5	3.5	4.8	3.6	5.4	3.7	5.6	3.6
	20.0	3.0	2.9	3.6	3.1	4.2	3.5	4.5	3.5	4.8	3.6	5.4	3.7	5.5	3.5
	21.0	3.0	2.9	3.6	3.1	4.2	3.5	4.5	3.5	4.8	3.6	5.4	3.7	5.5	3.5
	23.0	3.0	2.9	3.6	3.1	4.2	3.5	4.5	3.5	4.8	3.6	5.3	3.6	5.4	3.4
	25.0	3.0	2.9	3.6	3.1	4.2	3.5	4.5	3.5	4.8	3.6	5.2	3.6	5.3	3.4
	27.0	3.0	2.9	3.6	3.1	4.2	3.5	4.5	3.5	4.8	3.6	5.2	3.5	5.3	3.4
	29.0	3.0	2.9	3.6	3.1	4.2	3.5	4.5	3.5	4.8	3.6	5.1	3.5	5.2	3.4
	31.0	3.0	2.9	3.6	3.1	4.2	3.5	4.5	3.5	4.8	3.6	5.0	3.5	5.1	3.3
	33.0	3.0	2.9	3.6	3.1	4.2	3.5	4.5	3.5	4.8	3.6	4.9	3.4	5.0	3.3
	35.0	3.0	2.9	3.6	3.1	4.2	3.5	4.5	3.5	4.7	3.6	4.9	3.4	5.0	3.3
	37.0	3.0	2.9	3.6	3.1	4.2	3.5	4.5	3.5	4.7	3.5	4.8	3.4	4.9	3.3
	39.0	3.0	2.9	3.6	3.1	4.2	3.5	4.5	3.6	4.6	3.5	4.7	3.4	4.8	3.2
50	10.0	3.8	3.3	4.5	3.6	5.2	4.0	5.6	4.1	6.0	4.2	6.7	4.3	7.4	4.3
	12.0	3.8	3.3	4.5	3.6	5.2	4.0	5.6	4.1	6.0	4.2	6.7	4.3	7.3	4.3
	14.0	3.8	3.3	4.5	3.6	5.2	4.0	5.6	4.1	6.0	4.2	6.7	4.3	7.2	4.2
	16.0	3.8	3.3	4.5	3.6	5.2	4.0	5.6	4.1	6.0	4.2	6.7	4.3	7.1	4.2
	18.0	3.8	3.3	4.5	3.6	5.2	4.0	5.6	4.1	6.0	4.2	6.7	4.3	7.0	4.1
	20.0	3.8	3.3	4.5	3.6	5.2	4.0	5.6	4.1	6.0	4.2	6.7	4.3	6.9	4.1
	21.0	3.8	3.3	4.5	3.6	5.2	4.0	5.6	4.1	6.0	4.2	6.7	4.3	6.8	4.0
	23.0	3.8	3.3	4.5	3.6	5.2	4.0	5.6	4.1	6.0	4.2	6.6	4.2	6.7	4.0
	25.0	3.8	3.3	4.5	3.6	5.2	4.0	5.6	4.1	6.0	4.2	6.5	4.2	6.6	4.0
	27.0	3.8	3.3	4.5	3.6	5.2	4.0	5.6	4.1	6.0	4.2	6.4	4.1	6.6	3.9
	29.0	3.8	3.3	4.5	3.6	5.2	4.0	5.6	4.1	6.0	4.2	6.3	4.1	6.5	3.9
	31.0	3.8	3.3	4.5	3.6	5.2	4.0	5.6	4.1	6.0	4.2	6.2	4.0	6.4	3.8
	33.0	3.8	3.3	4.5	3.6	5.2	4.0	5.6	4.1	6.0	4.2	6.1	4.0	6.3	3.8
	35.0	3.8	3.3	4.5	3.6	5.2	4.0	5.6	4.1	5.9	4.1	6.0	4.0	6.2	3.8
	37.0	3.8	3.3	4.5	3.6	5.2	4.0	5.6	4.1	5.8	4.1	5.9	3.9	6.1	3.7
	39.0	3.8	3.3	4.5	3.6	5.2	4.0	5.6	4.1	5.7	4.0	5.8	3.9	6.0	3.7
63	10.0	4.8	3.8	5.7	4.2	6.6	4.6	7.1	4.6	7.6	4.6	8.5	4.8	9.3	4.9
	12.0	4.8	3.8	5.7	4.2	6.6	4.6	7.1	4.6	7.6	4.6	8.5	4.8	9.2	4.9
	14.0	4.8	3.8	5.7	4.2	6.6	4.6	7.1	4.6	7.6	4.6	8.5	4.8	9.1	4.8
	16.0	4.8	3.8	5.7	4.2	6.6	4.6	7.1	4.6	7.6	4.6	8.5	4.8	9.0	4.8
	18.0	4.8	3.8	5.7	4.2	6.6	4.6	7.1	4.6	7.6	4.6	8.5	4.8	8.8	4.8
	20.0	4.8	3.8	5.7	4.2	6.6	4.6	7.1	4.6	7.6	4.6	8.5	4.8	8.7	4.7
	21.0	4.8	3.8	5.7	4.2	6.6	4.6	7.1	4.6	7.6	4.6	8.5	4.8	8.7	4.7
	23.0	4.8	3.8	5.7	4.2	6.6	4.6	7.1	4.6	7.6	4.6	8.4	4.8	8.5	4.6
	25.0	4.8	3.8	5.7	4.2	6.6	4.6	7.1	4.6	7.6	4.6	8.3	4.7	8.4	4.6
	27.0	4.8	3.8	5.7	4.2	6.6	4.6	7.1	4.6	7.6	4.6	8.1	4.7	8.3	4.6
	29.0	4.8	3.8	5.7	4.2	6.6	4.6	7.1	4.6	7.6	4.6	8.0	4.7	8.2	4.5
	31.0	4.8	3.8	5.7	4.2	6.6	4.6	7.1	4.6	7.6	4.6	7.9	4.6	8.1	4.5
	33.0	4.8	3.8	5.7	4.2	6.6	4.6	7.1	4.6	7.6	4.6	7.8	4.6	7.9	4.4
	35.0	4.8	3.8	5.7	4.2	6.6	4.6	7.1	4.6	7.5	4.6	7.7	4.5	7.8	4.4
	37.0	4.8	3.8	5.7	4.2	6.6	4.6	7.1	4.6	7.4	4.6	7.5	4.5	7.7	4.3
	39.0	4.8	3.8	5.7	4.2	6.6	4.6	7.1	4.6	7.2	4.6	7.4	4.4	7.6	4.3
80	10.0	6.1	4.9	7.2	5.4	8.4	5.9	9.0	6.0	9.6	6.0	10.8	6.2	11.8	6.4
	12.0	6.1	4.9	7.2	5.4	8.4	5.9	9.0	6.0	9.6	6.0	10.8	6.2	11.7	6.3
	14.0	6.1	4.9	7.2	5.4	8.4	5.9	9.0	6.0	9.6	6.0	10.8	6.2	11.5	6.3
	16.0	6.1	4.9	7.2	5.4	8.4	5.9	9.0	6.0	9.6	6.0	10.8	6.2	11.4	6.2
	18.0	6.1	4.9	7.2	5.4	8.4	5.9	9.0	6.0	9.6	6.0	10.8	6.2	11.2	6.2
	20.0	6.1	4.9	7.2	5.4	8.4	5.9	9.0	6.0	9.6	6.0	10.8	6.2	11.1	6.1
	21.0	6.1	4.9	7.2	5.4	8.4	5.9	9.0	6.0	9.6	6.0	10.8	6.2	11.0	6.1
	23.0	6.1	4.9	7.2	5.4	8.4	5.9	9.0	6.0	9.6	6.0	10.6	6.2	10.8	6.0
	25.0	6.1	4.9	7.2	5.4	8.4	5.9	9.0	6.0	9.6	6.0	10.5	6.1	10.7	6.0
	27.0	6.1	4.9	7.2	5.4	8.4	5.9	9.0	6.0	9.6	6.0	10.3	6.1	10.5	5.9
	29.0	6.1	4.9	7.2	5.4	8.4	5.9	9.0	6.0	9.6	6.0	10.2	6.0	10.4	5.9
	31.0	6.1	4.9	7.2	5.4	8.4	5.9	9.0	6.0	9.6	6.0	10.0	6.0	10.2	5.8
	33.0	6.1	4.9	7.2	5.4	8.4	5.9	9.0	6.0	9.6	6.0	9.8	5.9	10.1	5.7
	35.0	6.1	4.9	7.2	5.4	8.4	5.9	9.0	6.0	9.5	6.0	9.7	5.9	9.9	5.7
	37.0	6.1	4.9	7.2	5.4	8.4	5.9	9.0	6.0	9.3	5.9	9.5	5.8	9.8	5.6
	39.0	6.1	4.9	7.2	5.4	8.4	5.9	9.0	6.0	9.2	5.9	9.4	5.8	9.6	5.6

Cooling capacity

Unit Size	Outdoor air temp. °CDB	Indoor air temp. 14.0°CWB 20°CDB TC	SC	16.0°CWB 23°CDB TC	SC	18.0°CWB 26°CDB TC	SC	19.0°CWB 27°CDB TC	SC	20.0°CWB 28°CDB TC	SC	22.0°CWB 30°CDB TC	SC	24.0°CWB 32°CDB TC	SC
100	10.0	7.6	6.7	9.0	7.4	10.5	8.3	11.2	8.3	11.9	8.5	13.4	8.7	14.7	8.8
	12.0	7.6	6.7	9.0	7.4	10.5	8.3	11.2	8.3	11.9	8.5	13.4	8.7	14.5	8.7
	14.0	7.6	6.7	9.0	7.4	10.5	8.3	11.2	8.3	11.9	8.5	13.4	8.7	14.4	8.6
	16.0	7.6	6.7	9.0	7.4	10.5	8.3	11.2	8.3	11.9	8.5	13.4	8.7	14.2	8.5
	18.0	7.6	6.7	9.0	7.4	10.5	8.3	11.2	8.3	11.9	8.5	13.4	8.7	14.0	8.4
	20.0	7.6	6.7	9.0	7.4	10.5	8.3	11.2	8.3	11.9	8.5	13.4	8.7	13.8	8.2
	21.0	7.6	6.7	9.0	7.4	10.5	8.3	11.2	8.3	11.9	8.5	13.4	8.7	13.7	8.2
	23.0	7.6	6.7	9.0	7.4	10.5	8.3	11.2	8.3	11.9	8.5	13.2	8.6	13.5	8.1
	25.0	7.6	6.7	9.0	7.4	10.5	8.3	11.2	8.3	11.9	8.5	13.0	8.5	13.3	8.0
	27.0	7.6	6.7	9.0	7.4	10.5	8.3	11.2	8.3	11.9	8.5	12.8	8.3	13.1	7.9
	29.0	7.6	6.7	9.0	7.4	10.5	8.3	11.2	8.3	11.9	8.5	12.6	8.3	12.9	7.9
	31.0	7.6	6.7	9.0	7.4	10.5	8.3	11.2	8.3	11.9	8.5	12.4	8.2	12.7	7.8
	33.0	7.6	6.7	9.0	7.4	10.5	8.3	11.2	8.3	11.9	8.5	12.2	8.2	12.5	7.7
	35.0	7.6	6.7	9.0	7.4	10.5	8.3	11.2	8.3	11.8	8.4	12.1	8.1	12.3	7.6
	37.0	7.6	6.7	9.0	7.4	10.5	8.3	11.2	8.3	11.6	8.3	11.9	8.1	12.2	7.6
	39.0	7.6	6.7	9.0	7.4	10.5	8.3	11.2	8.3	11.4	8.3	11.7	8.0	12.0	7.6
125	10.0	9.5	8.2	11.3	9.1	13.1	10.0	14.0	10.2	14.9	10.4	16.8	10.8	18.4	10.9
	12.0	9.5	8.2	11.3	9.1	13.1	10.0	14.0	10.2	14.9	10.4	16.8	10.8	18.2	10.8
	14.0	9.5	8.2	11.3	9.1	13.1	10.0	14.0	10.2	14.9	10.4	16.8	10.8	18.0	10.7
	16.0	9.5	8.2	11.3	9.1	13.1	10.0	14.0	10.2	14.9	10.4	16.8	10.8	17.7	10.5
	18.0	9.5	8.2	11.3	9.1	13.1	10.0	14.0	10.2	14.9	10.4	16.8	10.8	17.5	10.4
	20.0	9.5	8.2	11.3	9.1	13.1	10.0	14.0	10.2	14.9	10.4	16.8	10.8	17.2	10.2
	21.0	9.5	8.2	11.3	9.1	13.1	10.0	14.0	10.2	14.9	10.4	16.8	10.8	17.1	10.2
	23.0	9.5	8.2	11.3	9.1	13.1	10.0	14.0	10.2	14.9	10.4	16.5	10.7	16.9	10.1
	25.0	9.5	8.2	11.3	9.1	13.1	10.0	14.0	10.2	14.9	10.4	16.3	10.5	16.6	10.0
	27.0	9.5	8.2	11.3	9.1	13.1	10.0	14.0	10.2	14.9	10.4	16.1	10.4	16.4	9.9
	29.0	9.5	8.2	11.3	9.1	13.1	10.0	14.0	10.2	14.9	10.4	15.8	10.2	16.2	9.9
	31.0	9.5	8.2	11.3	9.1	13.1	10.0	14.0	10.2	14.9	10.4	15.6	10.1	15.9	9.8
	33.0	9.5	8.2	11.3	9.1	13.1	10.0	14.0	10.2	14.9	10.4	15.3	10.0	15.7	9.7
	35.0	9.5	8.2	11.3	9.1	13.1	10.0	14.0	10.2	14.8	10.4	15.1	10.0	15.4	9.6
	37.0	9.5	8.2	11.3	9.1	13.1	10.0	14.0	10.2	14.5	10.3	14.9	9.9	15.2	9.5
	39.0	9.5	8.2	11.3	9.1	13.1	10.0	14.0	10.3	14.3	10.1	14.6	9.8	15.0	9.4
200	10.0	15.1	13.4	18.0	14.9	21.0	16.3	22.4	16.8	23.8	17.0	26.8	17.6	29.4	17.8
	12.0	15.1	13.4	18.0	14.9	21.0	16.3	22.4	16.8	23.8	17.0	26.8	17.6	29.0	17.6
	14.0	15.1	13.4	18.0	14.9	21.0	16.3	22.4	16.8	23.8	17.0	26.8	17.6	28.7	17.4
	16.0	15.1	13.4	18.0	14.9	21.0	16.3	22.4	16.8	23.8	17.0	26.8	17.6	28.3	17.2
	18.0	15.1	13.4	18.0	14.9	21.0	16.3	22.4	16.8	23.8	17.0	26.8	17.6	27.9	16.9
	20.0	15.1	13.4	18.0	14.9	21.0	16.3	22.4	16.8	23.8	17.0	26.8	17.6	27.5	16.7
	21.0	15.1	13.4	18.0	14.9	21.0	16.3	22.4	16.8	23.8	17.0	26.8	17.6	27.4	16.6
	23.0	15.1	13.4	18.0	14.9	21.0	16.3	22.4	16.8	23.8	17.0	26.4	17.3	27.0	16.4
	25.0	15.1	13.4	18.0	14.9	21.0	16.3	22.4	16.8	23.8	17.0	26.1	17.1	26.6	16.2
	27.0	15.1	13.4	18.0	14.9	21.0	16.3	22.4	16.8	23.8	17.0	25.7	16.8	26.2	16.1
	29.0	15.1	13.4	18.0	14.9	21.0	16.3	22.4	16.8	23.8	17.0	25.3	16.6	25.8	15.9
	31.0	15.1	13.4	18.0	14.9	21.0	16.3	22.4	16.8	23.8	17.0	24.9	16.4	25.4	15.7
	33.0	15.1	13.4	18.0	14.9	21.0	16.3	22.4	16.8	23.8	17.0	24.5	16.3	25.0	15.6
	35.0	15.1	13.4	18.0	14.9	21.0	16.3	22.4	16.8	23.6	17.0	24.2	16.1	24.6	15.4
	37.0	15.1	13.4	18.0	14.9	21.0	16.3	22.4	16.8	23.2	16.8	23.8	16.0	24.3	15.3
	39.0	15.1	13.4	18.0	14.9	21.0	16.3	22.4	16.8	22.8	16.6	23.4	15.8	23.9	15.1
250	10.0	18.9	16.9	22.5	18.5	26.2	20.4	28.0	20.9	29.8	21.2	33.5	22.1	36.8	22.1
	12.0	18.9	16.9	22.5	18.5	26.2	20.4	28.0	20.9	29.8	21.2	33.5	22.1	36.3	21.8
	14.0	18.9	16.9	22.5	18.5	26.2	20.4	28.0	20.9	29.8	21.2	33.5	22.1	35.9	21.6
	16.0	18.9	16.9	22.5	18.5	26.2	20.4	28.0	20.9	29.8	21.2	33.5	22.1	35.4	21.3
	18.0	18.9	16.9	22.5	18.5	26.2	20.4	28.0	20.9	29.8	21.2	33.5	22.1	34.9	21.0
	20.0	18.9	16.9	22.5	18.5	26.2	20.4	28.0	20.9	29.8	21.2	33.5	22.1	34.4	20.7
	21.0	18.9	16.9	22.5	18.5	26.2	20.4	28.0	20.9	29.8	21.2	33.5	22.1	34.2	20.6
	23.0	18.9	16.9	22.5	18.5	26.2	20.4	28.0	20.9	29.8	21.2	33.0	21.7	33.7	20.3
	25.0	18.9	16.9	22.5	18.5	26.2	20.4	28.0	20.9	29.8	21.2	32.6	21.5	33.2	20.2
	27.0	18.9	16.9	22.5	18.5	26.2	20.4	28.0	20.9	29.8	21.2	32.1	21.2	32.8	20.0
	29.0	18.9	16.9	22.5	18.5	26.2	20.4	28.0	20.9	29.8	21.2	31.6	20.9	32.3	19.9
	31.0	18.9	16.9	22.5	18.5	26.2	20.4	28.0	20.9	29.8	21.2	31.1	20.6	31.8	19.7
	33.0	18.9	16.9	22.5	18.5	26.2	20.4	28.0	20.9	29.8	21.2	30.6	20.4	31.3	19.5
	35.0	18.9	16.9	22.5	18.5	26.2	20.4	28.0	20.9	29.5	21.1	30.2	20.2	30.8	19.4
	37.0	18.9	16.9	22.5	18.5	26.2	20.4	28.0	20.9	29.0	20.9	29.7	20.0	30.4	19.2
	39.0	18.9	16.9	22.5	18.5	26.2	20.4	28.0	21.0	28.5	20.6	29.2	19.8	29.9	19.0

TC Total capacity ; kW
SC Sensible capacity ; kW

Refer to Outdoor Unit Capacity Tables : on page 411~, 470~, for the actual performance data of each indoor and outdoor unit combination.

8. Fan Performances

8.1 50Hz

FXMQ40 · 50 · 63MA

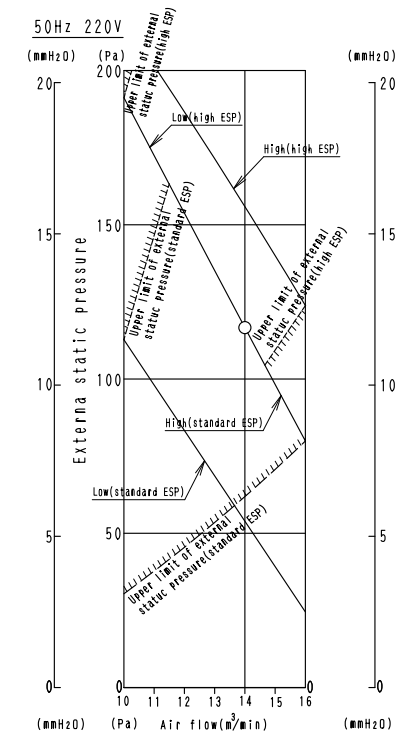

C : 3D019610B-5

FXMQ80MA

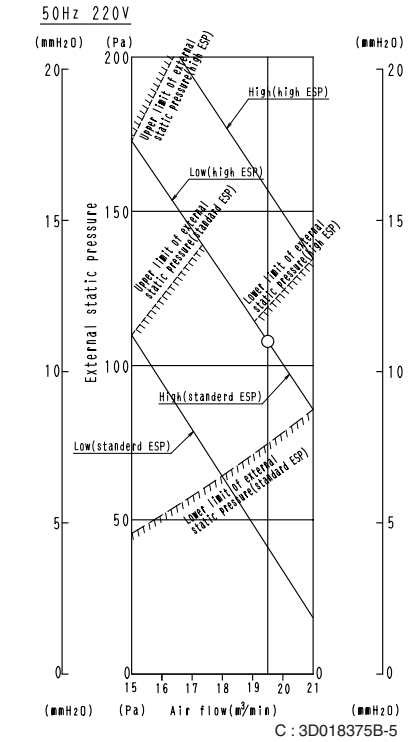

C : 3D018375B-5

FXMQ100MA

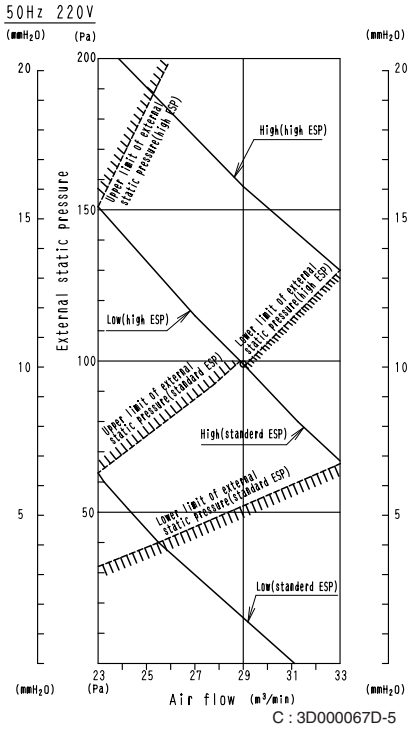

C : 3D000067D-5

FXMQ125MA

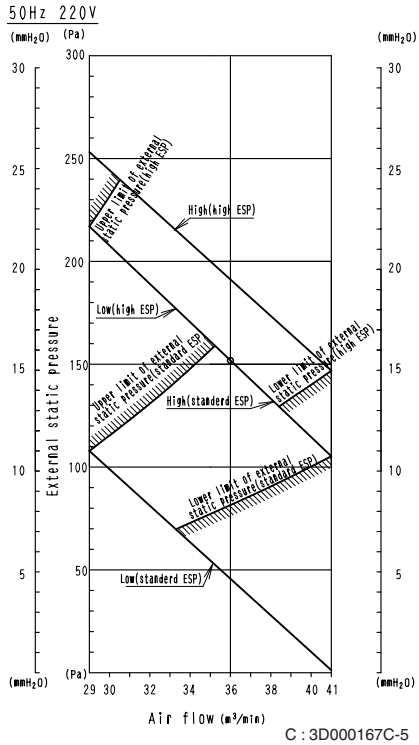

C : 3D000167C-5

FXMQ200MA

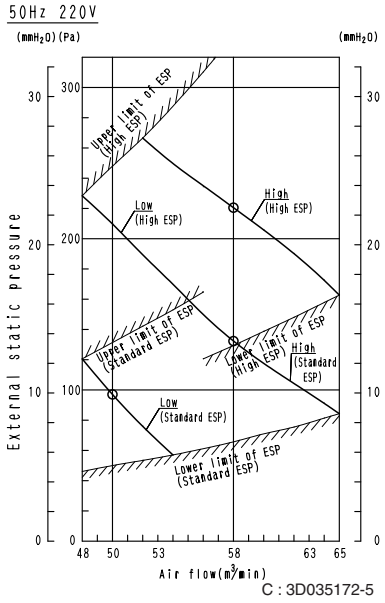

C : 3D035172-5

FXMQ250MA

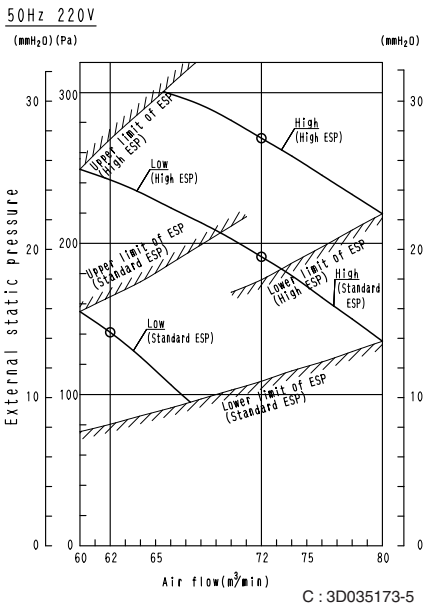

C : 3D035173-5

Note:

1. The remote controller can be used to switch between “high” and “low”.
2. The air flow is set to “standard” before leaving the factory. It is possible to switch between “standard ESP” and “high ESP” by changing the switch in the indoor unit electrical box.

9. Sound Levels

Overall

■ **Ceiling Mounted Duct Type**

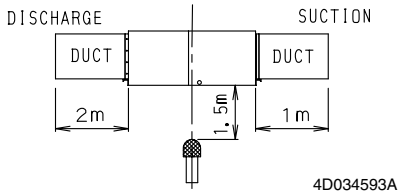

dBA

Model	220V, 50Hz		240V, 50Hz	
	H	L	H	L
FXMQ40MA FXMQ50MA FXMQ63MA	39	35	41	37
FXMQ80MA	42	38	44	40
FXMQ100MA	43	39	45	41
FXMQ125MA	45	42	47	44
FXMQ200MA FXMQ250MA	48	45	49	46

Note:

1. The operating conditions are assumed to be standard (JIS conditions).
2. These operating values were obtained in a dead room (conversion values).
   Sound level will vary depending on a range of factors such as the construction (acoustic absorption coefficient) of the particular room in which the equipments installed.

Octave Band Level

220V 50Hz
240V 50Hz

FXMQ40 · 50 · 63MAVE

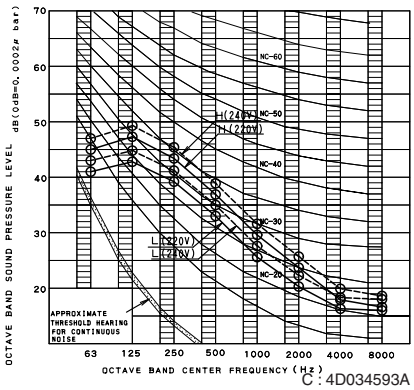

FXMQ80MAVE

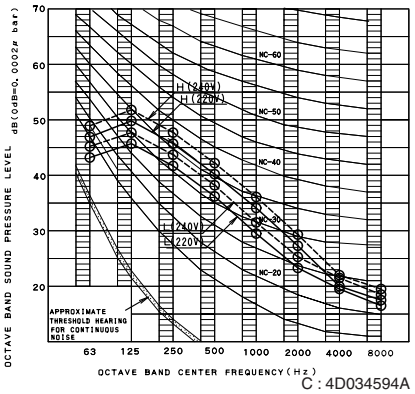

FXMQ100MAVE

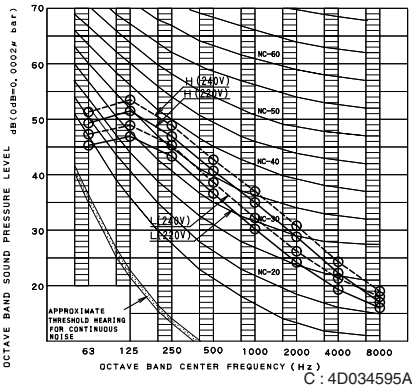

FXMQ125MAVE

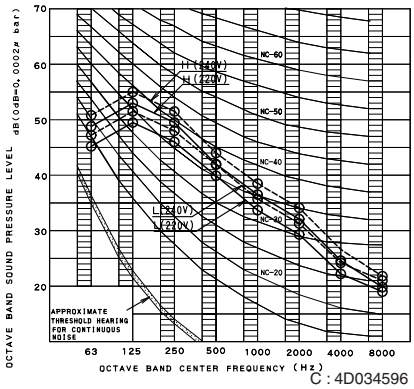

FXMQ200MAVE

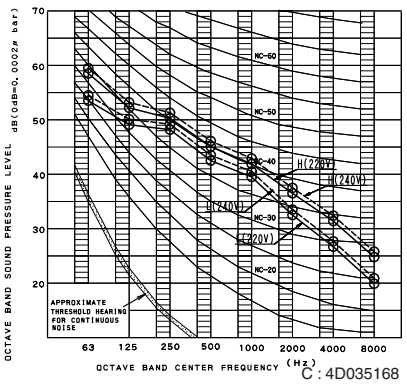

FXMQ250MAVE

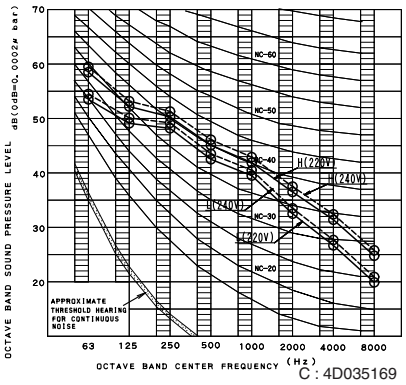

10. Installation

Installation Example

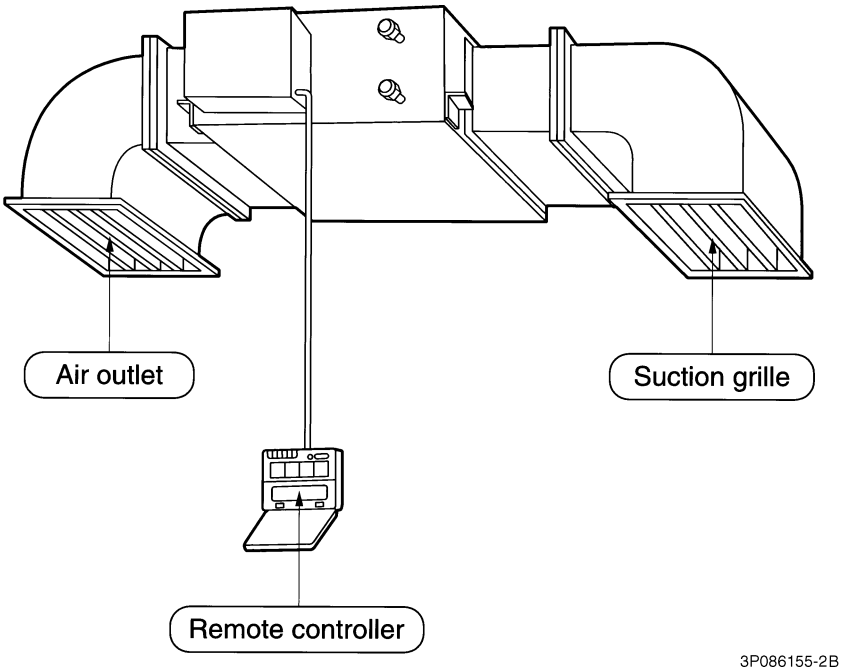

Center of Gravity

FXMQ40~125MA

Unit (mm)

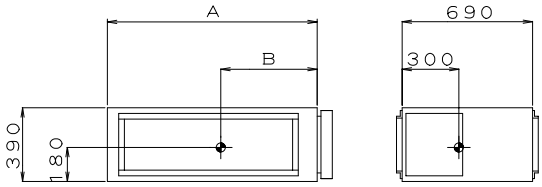

	A	B
FXMQ40・50・63・80MAVE	720	290
FXMQ100・125MAVE	1110	510

C : 4D040333

FXMQ200 · 250MA

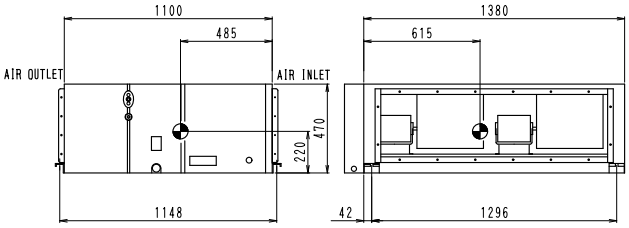

C : 4D035171

Service Space

Please attach additional thermal insulation material to the unit body when it is believed that the relative humidity in the ceiling exceeds 80%. Use glass wool, polyethylene foam, or similar with a thickness of 10 mm or more as thermal insulation material.

(1) Select an installation site where the following conditions are fulfilled and that meets with your customer's approval.
- In the upper space (including the back of the ceiling) of the indoor unit where there is no possible dripping of water from the refrigerant pipe, drain pipe, water pipe, etc.
- Where optimum air distribution can be ensured.
- Where nothing blocks the air passage.
- Where condensate can be properly drained.
- If supporting structural members are not strong enough to take the unit's weight, the unit could fall out of place and cause serious injury.
- Where the false ceiling is not noticeably on an incline.
- Where there is no risk of flammable gas leakage.
- Where sufficient clearance for maintenance and service can be ensured. **(Refer to Fig. 1)**
- Where piping between indoor and outdoor units is possible within the allowable limit. (Refer to the installation manual of the outdoor unit.)

7

CAUTION

- Install the indoor and outdoor units, power supply wiring and connecting wires at least 1 meter away from televisions or radios in order to prevent image interference or noise.
  (Depending on the radio waves, a distance of 1 meter may not be sufficient enough to eliminate the noise.)

(2) Use suspension bolts for installation. Check whether the ceiling is strong enough to support the weight of the unit or not. If there is a risk, reinforce the ceiling before installing the unit.

〈FXMQ40 · 50 · 63 · 80 · 100 · 125M(A)VE〉

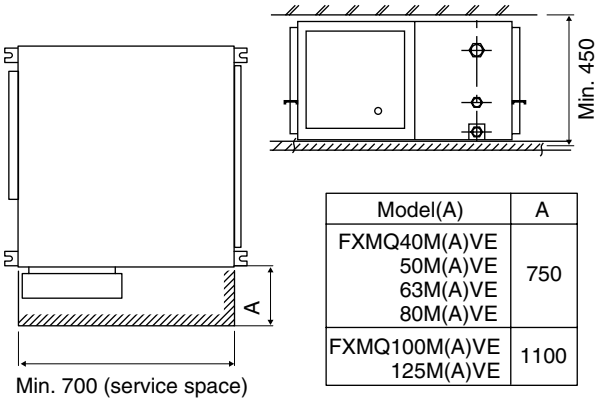

Model(A)	A
FXMQ40M(A)VE 50M(A)VE 63M(A)VE 80M(A)VE	750
FXMQ100M(A)VE 125M(A)VE	1100

〈FXMQ200 · 250M(A)VE〉

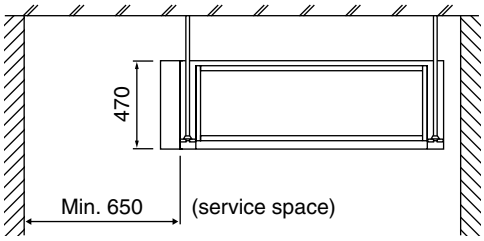

Fig. 1 (length : mm)

C : 3P086156-6U

Note:
Above figure means minimum value. Please keep these value at least.

Bolt Pitch

(1) Relative positions of indoor unit and suspension bolt. **(Refer to Fig. 2)**

〈FXMQ40 · 50 · 63 · 80 · 100 · 125M(A)VE〉

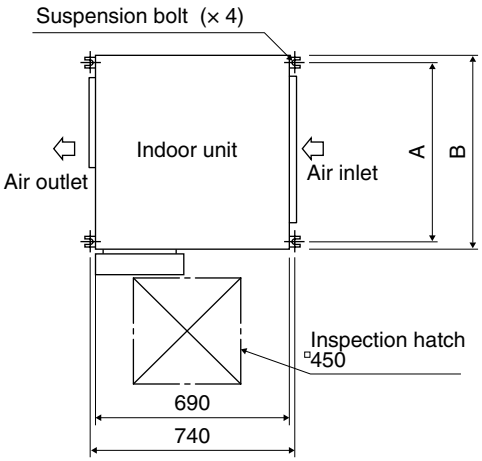

〈FXMQ200 · 250M(A)VE〉

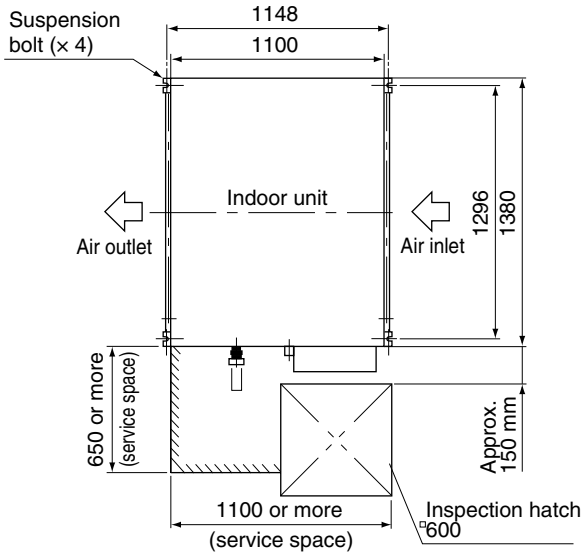

Model	A	B
FXMQ40M(A)VE 50M(A)VE 63M(A)VE 80M(A)VE	670	720
FXMQ100M(A)VE 125M(A)VE	1060	1110

Fig. 2 (length : mm)

(2) Install a canvass duct to the air discharge outlet and air inlet so that vibration from the machine body isn't transmitted to the duct or ceiling.
You should also apply acoustic (insulation material) to the inside of the duct, and vibration insulation rubber to the suspension bolts.

(3) Install suspension bolts. (Use bolts of 10 mm diameter.)
- Install the equipment where supporting structures are strong enough to bear the equipment's weight. Use embedded inserts or anchor bolts with new buildings and hole-in-anchors with old buildings.

〈Installation example〉

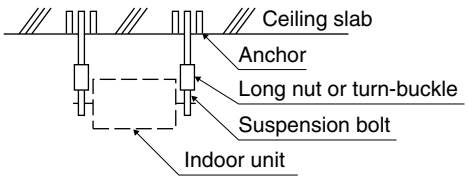

Note) All the above parts are field supplied.

C : 3P086156-6U

Drain Piping Work

《Rig the drain pipe as shown below and take measures against condensation. Improperly rigged piping could lead to leaks and eventually wet furniture and belongings.》
《Insulate the drain hose inside the building.》

(1) Carry out the drain piping.

FXMQ40-125MAVE

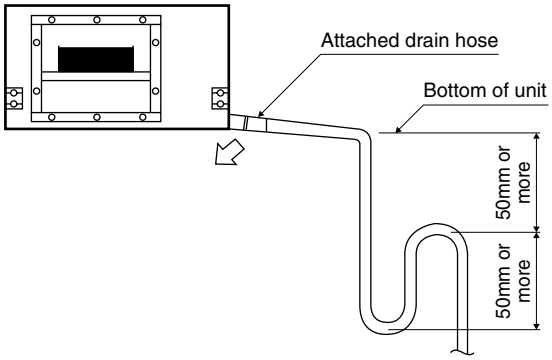

- Keep piping as short as possible and slope it downwards so that air may not remained trapped inside the pipe.
- Keep pipe size equal to or greater than that of the connecting pipe (Vinyl pipe of 25 mm nominal diameter and 32 mm outer diameter).
- Use the attached drain hose and clamp.
  Tighten the clamp firmly.
- Insulate the clamp metal with the sealing pad.

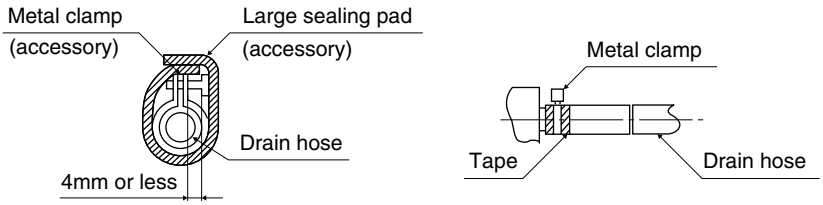

- **There is negative pressure inside the unit relative to atmospheric pressure when the unit is running, so be sure to provide drain flap on the drain outlet. (See the figure)**
- **In order to prevent foreign matter from building up inside the piping, you should avoid curves as much as possible, and arrange so the trap can be cleaned.**

NOTE

- If converging multiple drain pipes, install according to the procedure shown below. (Install a drain trap for each indoor unit.)

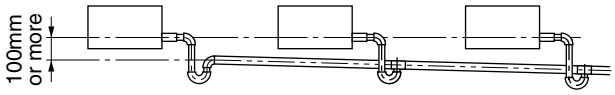

FXMQ200 · 250MAVE

- A drain trap need not be installed.
- The diameter of the piping is the same as that of the connecting pipe (PS1B), and should be kept equal to or greater than that of the connecting pipe.

(2) After piping work is finished, check drainage flows smoothly.

FXMQ40-125MAVE

- Add approximately 1 liter of water slowly from the air inlet and check drainage flow.

FXMQ200 · 250MAVE

- Open the water supply port, add approximately 1 liter of water slowly into the drain pan and check drainage flow.

⚠ CAUTION

- Drain piping connections
  Do not connect the drain piping directly to sewage pipes that smell of ammonia. The ammonia in the sewage might enter the indoor unit through the drain pipes and corrode the heat exchanger.

C : 3P086156-6U

11. Accessories

Standard Accessories

FXMQ40~125MA

Name	Metal clamp	Drain hose	Insulation for fitting	Sealing pad	Clamp	Screws for duct flanges	
Quantity	1 pc.	1 pc.	1 each.	1 each.	6 pcs.	As described in table below	
Shape			for liquid pipe for gas pipe	Large Small		FXMQ40・50・63・80M(A)VE 16 FXMQ100・125M(A)VE 28	(Other) • Operation manual • Installation manual • Washers (8 pcs.)

FXMQ200・250MA

Name	Attached piping (1)	(Other)
Quantity	1 set	• Operation manual • Installation manual • Screws for flange connection (M5) (48 pcs.) • Insulation material (for hanger)(2 pcs.) • Washers (8 pcs.) • Clamps (2 pcs.) • Hexagon head bolt for pipe flange (M10) (2 pcs.) • Spring washer for pipe flange (M10) (2 pcs.)
Shape		

C : 3P086156-6U

Optional Accessories (For Unit)

Item \ Type		FXMQ40MA	FXMQ50MA	FXMQ63MA	FXMQ80MA	FXMQ100MA	FXMQ125MA	FXMQ200MA	FXMQ250MA
Drain pump kit		KDU-30L125VE						KDU30L250VE	
High efficiency filter	65%	KAFP372A80				KAFP372A160		KAFJ372L280	
	90%	KAFP373A80				KAFP373A160		KAFJ373L280	
Filter chamber		KDDFP37A80				KDDFP37A160		KDJ3705L280	
Long life replacement filter		KAFP371A80				KAFP371A160		KAFJ371L280	

3D034598B

Optional Accessories (For Controls) : Refer to P.561

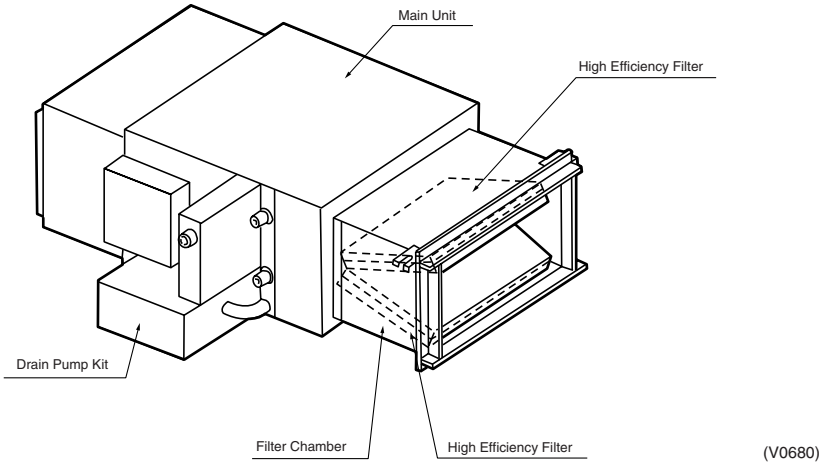

High Efficiency Filter

Specification

Model / Items	65% type						90% type					
	KAFP372A80		KAFP372A160		KAFJ372L280		KAFP373A80		KAFP373A160		KAFJ373L280	
Filter Chamber	KDDFP37A80		KDDFP37A160		KDJ3705L280		KDDFP37A80		KDDFP37A160		KDJ3705L280	
Dimension (W×D×T) (mm)	355×305×44		550×305×44		684×445×60		355×305×44		550×305×44		684×445×60	
Average Dust Collection Efficiency (%)	Colorimetric method 65%						Colorimetric method 90%					
Initial Pressure Loss (Pa)	18	35	26	38	27	42	28	54	36	56	29	45
Final Pressure Loss (Pa)	98						98					
Filter	Non-woven fabric of synthetic fiber						Non-woven fabric of synthetic fiber					
Life Time (h)	2500 hours (dust density 0.15mg/m³)						1800 hours (dust density 0.15mg/m³)					
Seats Structured	2		2		2		2		2		2	
Applicable Models	40 Class	50·63·80 Class	100 Class	125 Class	200·250 Class		40 Class	50·63·80 Class	100 Class	125 Class	200·250 Class	

Note:
The filter chamber is separately required when the high efficiency filter will be installed.

Characteristics of filter

■KAFP372A80, KAFP372A160, KAFP373A80, KAFP373A160, KDDFP37A80, KDDFP37A160

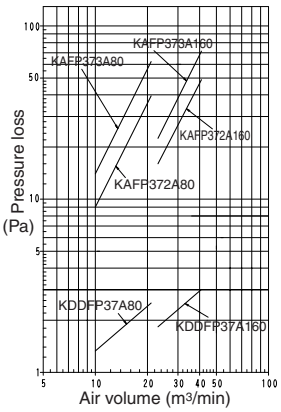

■KAFJ372L280,KAFJ373L280

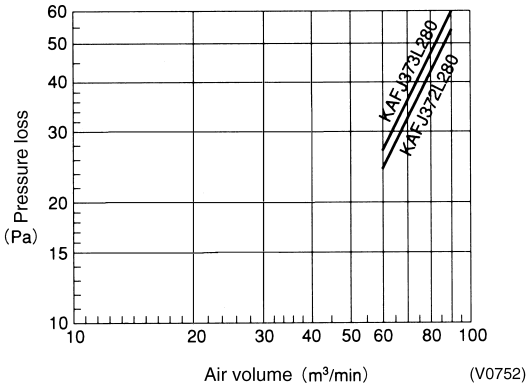

Dimensions of filter

■KAFJ372L280, KAFJ373L280

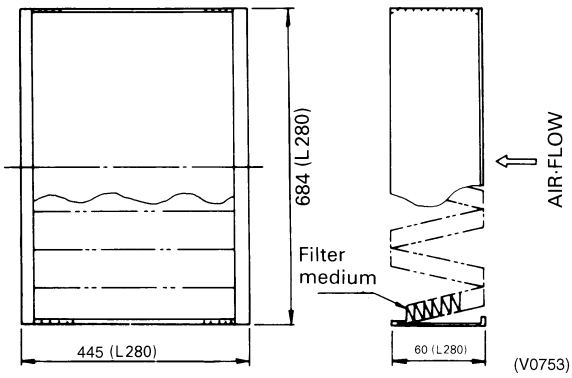

Installation

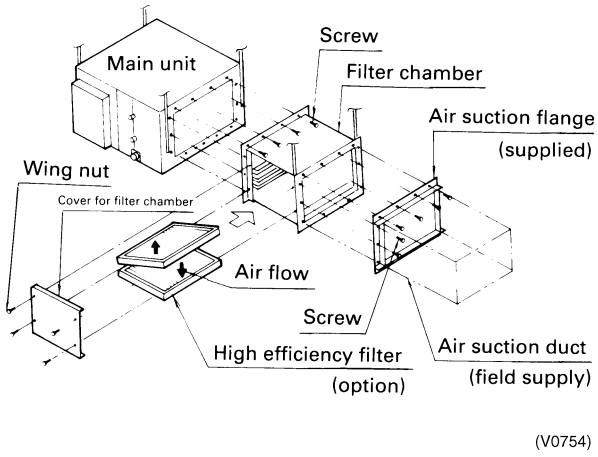

- Meet the airflow direction and arrow mark putting on the High efficiency filter.
- It is impossible to be built in with the air cleaning unit together.

Long Life Replacement Filter

Specifications

Item \ Model		KAFP371A80	KAFP371A160	KAFJ371L280
Filter Chamber for Bottom Suction		KDDFP37A80	KDDFP37A160	KDJ3705L280
Dimensions (W×D×T) mm		358.5×305×25	553.5×305×25	684×445×30
Average Efficiency (%)		50% (Gravity method)		
Pressure Loss (Pa)	Initial	7	8	9.8 (1mmH_2O)
	Final	49 (5mmH_2O)		
Material		Mildew Proof Resin Net		
Number Required per Unit		2	2	2
Life Time (h)		2,500 h (dust particle concentration at 0.15mg/m³)		
Applicable Model		40·50·63·80 Class	100·125 Class	200·250 Class

Dimensions

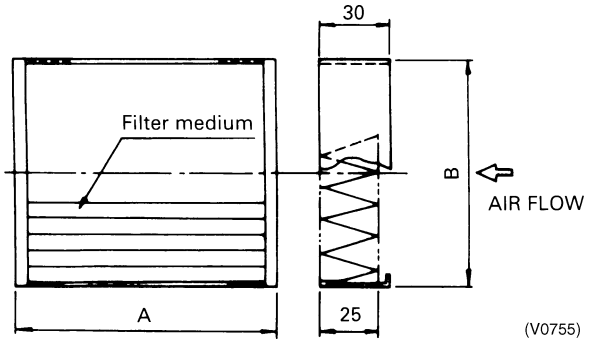

Model	A×B	Quantity
KAFP371A80	305×25	2
KAFP371A160	305×25	2
KAFJ371L280	684×445	2

Note:

The filter chamber is required when the long life filter will be installed.

Characteristics of filter

■KAFP371A80, KAFP371A160, KDDFP37A80, KDDFP37A160

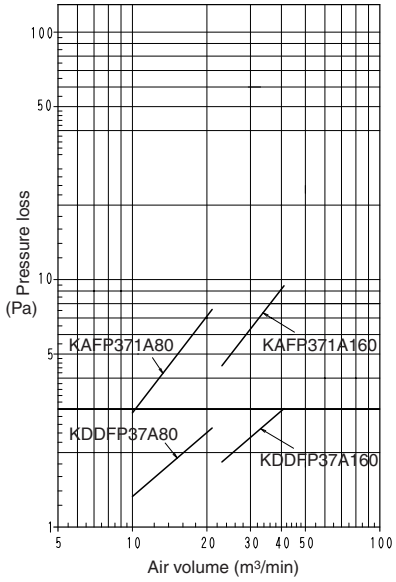

■KDJ3705L280

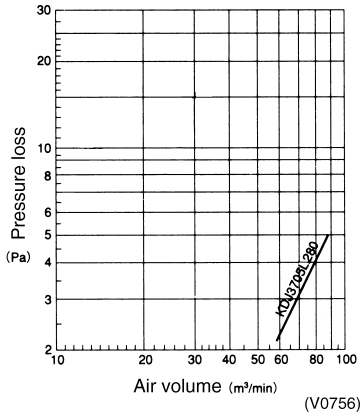

Drain Pump Kit

Specification

Items / Model	KDU-30L125VE	KDU30L250VE
Power Supply	Single phase 220-240V/220V 50Hz	
Power Consumption (W)	12/11 (50Hz)	19/17 (50Hz)
Drain-up Lift (mm)	Standard drain outlet of the unit +300~+750	Standard drain outlet of the unit +197~+447
Drain Outlet	VP25 (Internal diameter ϕ25, external diameter ϕ32)	
Safety Device	Float switch	
Weight (kg)	5.8	10
Applied Models	40 · 50 · 63 · 80 · 100 · 125 Class	200 · 250 Class

Precaution at use

1. When this kit will be used with the natural evaporation pan type humidifier together, the piping of unit's drain and humidifier's drain can be used in common.
2. Be sure to do test run (cooling) to make sure the drain flows out.
3. Prohibit providing a drain trap when the drain pump kit will be mounted.

Installation Space

KDU-30L125VE

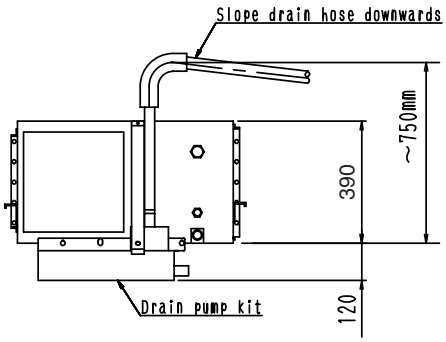

Provide a inspection hatch in a postion whitch makes it easy to service the indoor unit and drain pump kit.
(See the service space for the indoor unit)
Refer to the installation manual provided with the indoor unit.

If the drain pump kit has already been installed, note the following points when installing the indoor unit.
· Do not install the indoor unit on an incline against drainage flow (away from the drain outlet). This can lead to water leaks.

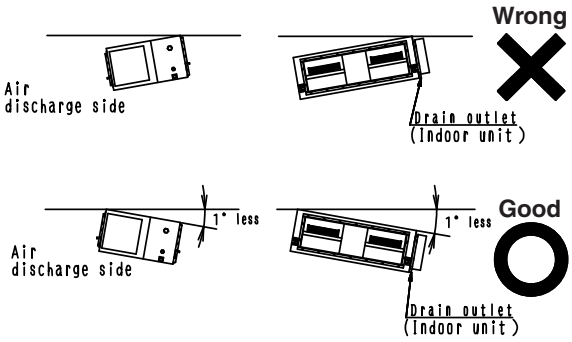

KDU30L250VE

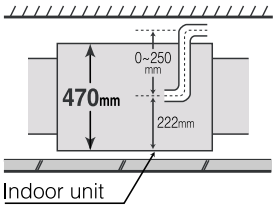

If the drain pump kit has already been installed, note the following when installing the indoor unit.
· Do not install the indoor unit on an incline against drainage flow (away from the drain outlet). This can lead to water leaks.

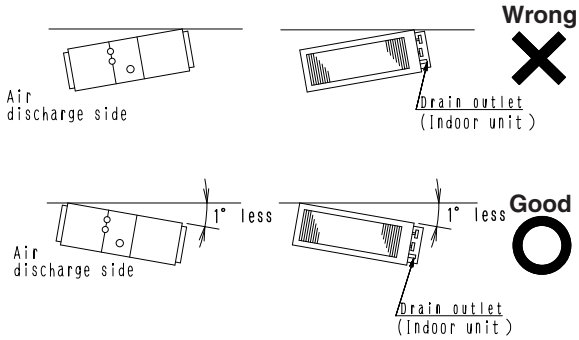

Internal Wiring Method

■ KDU-30L125VE

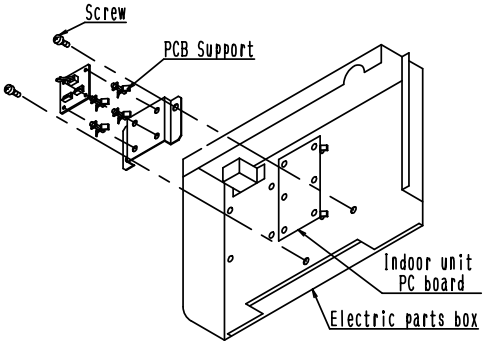

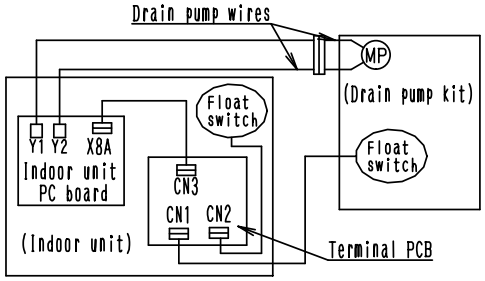

■ KDU30L250VE

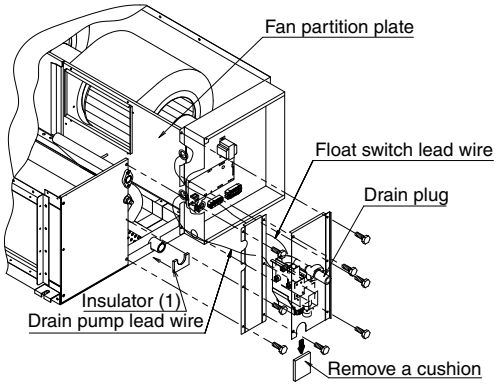

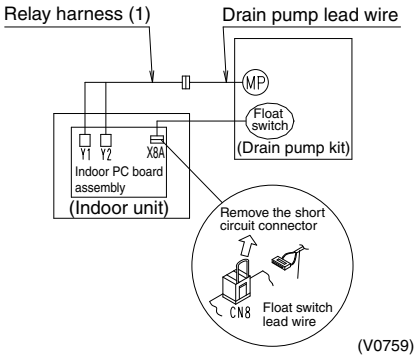

Dimensions with the Optional Accessories

High efficiency filter (Long life filter)

■ **FXMQ40~80MA**

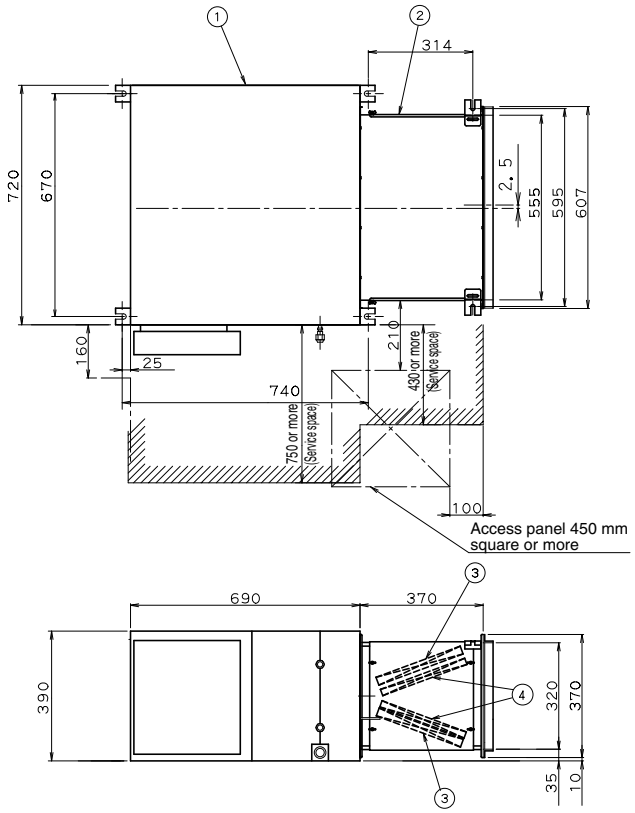

Note)
1. Be sure to provide an air filter in the suction air duct (with dust collection efficiency by more than 50% in the weight method.)
2. Be sure to install a drain trap in the drain piping because the outlet of drain will fall to negative pressure.
3. when a central drain system will be applied, each indoor unit should have a drain trap individually.

Number	Name	Description
4	Long life filter	
3	High efficiency filter	
2	Filter chamber	
1	Ceiling mounted duct type 's body	

JC : DU824-202N

■ **FXMQ100 · 125MA**

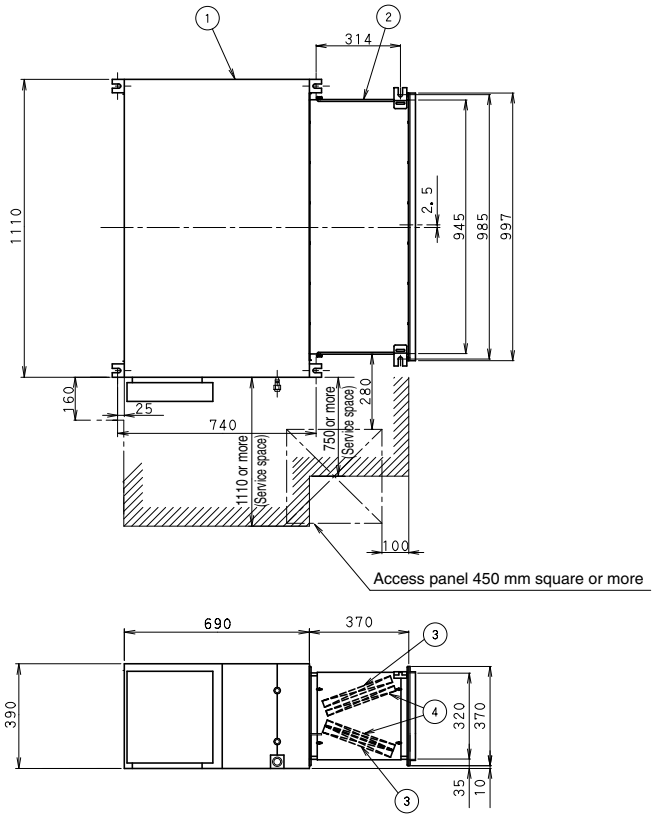

Note)
1. Be sure to provide an air filter in the suction air duct (with dust collection efficiency by more than 50% in the weight method.)
2. Be sure to install a drain trap in the drain piping because the outlet of drain will fall to negative pressure.
3. when a central drain system will be applied, each indoor unit should have a drain trap individually.

Number	Name	Description
4	Long life filter	
3	High efficiency filter	
2	Filter chamber	
1	Ceiling mounted duct type 's body	

JC : DU827-244N

Drain pump kit, High efficiency filter, Long life filter

■ FXMQ200 · 250MA

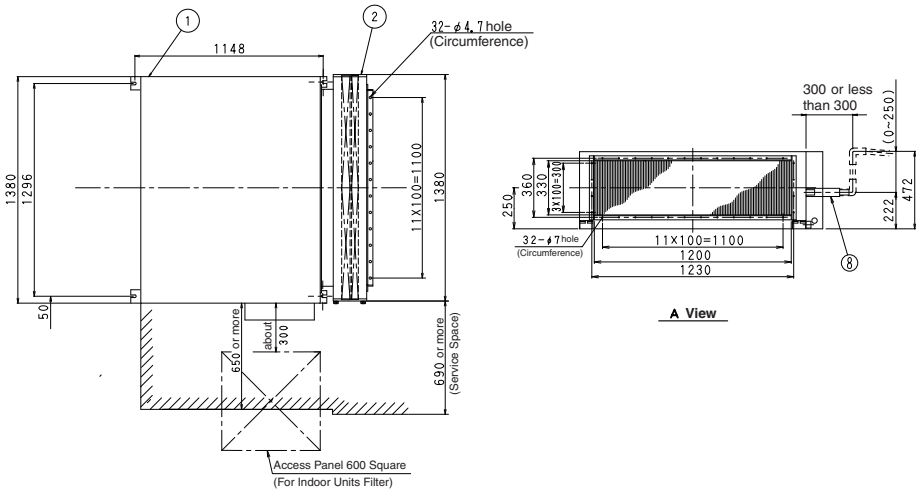

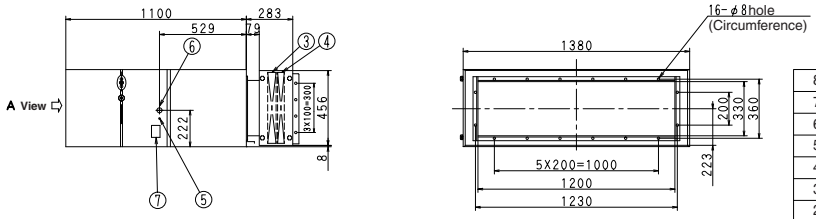

Number	Name	Description
8	Drain hose	Attached to Drain pump kit
7	Water inlet	
6	Drain piping connection	VP25(O.D.φ32,I.D.φ25)
5	Drain pump kit	Built in a body
4	Long life filter	
3	High efficiency filter	
2	Filter chamber	
1	Ceiling mounted duct type's body	

JC : 3D011124G

FXHQ-MA
Ceiling Suspended Type

1. Features 240
2. Specifications 241
3. Dimensions 242
4. Piping Diagrams 245
5. Wiring Diagrams 246
6. Electric Characteristics 247
7. Capacity Tables 248
   7.1 Cooling Capacity 248
8. Sound Levels 249
9. Installation 250
10. Accessories 253

1. Features

External Appearance

Slim body with quieter and wider air flow

- Adoption of newly designed QUIET STREAM FAN

Uses the new quiet stream fan and many more quiet technologies.

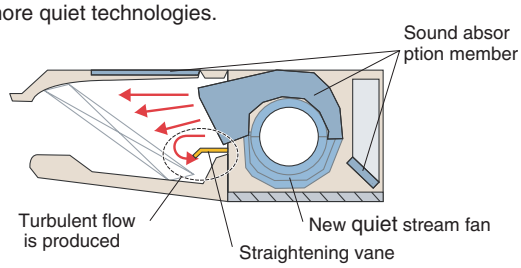

- Low operating sound

(dB(A))

Class	32	63	100
Operating sound (H/L)	36/31	39/34	45/37

- Installation is easy
  - Drain-up kit (optional) can be easily incorporated

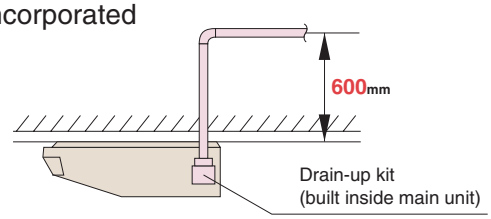

- Wide air discharge openings produce a spreading 100˚ air flow

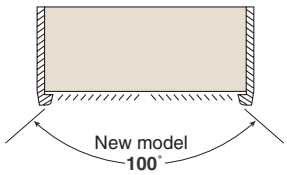

- Maintenance is easy
  - New Non-dew Frap with no implanted

Bristle-free Frap minimizes contamination and makes cleaning simpler.

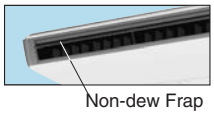

  - Easy to clean flat design
  - Maintenance is easier because everything can be performed from below the unit
  - A long-life filter (maintenance free up to one year) is equipped as standard

2. Specifications

Ceiling Suspended Type

Model			FXHQ32MAVE	FXHQ63MAVE	FXHQ100MAVE
∗1 Cooling Capacity (19.5°CWB)		kcal/h	3,200	6,300	10,000
		Btu/h	12,600	24,900	39,600
		kW	3.7	7.3	11.6
∗2 Cooling Capacity (19.0°CWB)		kW	3.6	7.1	11.2
Casing Color			White (10Y9/0.5)	White (10Y9/0.5)	White (10Y9/0.5)
Dimensions: (H×W×D)		mm	195×960×680	195×1,160×680	195×1,400×680
Coil (Cross Fin Coil)	Rows×Stages×Fin Pitch	mm	2×12×1.75	3×12×1.75	3×12×1.75
	Face Area	m²	0.182	0.233	0.293
Fan	Model		3D12K1AA1	4D12K1AA1	3D12K2AA1
	Type		Sirocco Fan	Sirocco Fan	Sirocco Fan
	Motor Output × Number of Units	W	62×1	62×1	130×1
	Air Flow Rate (H/L)	m³/min	12/10	17.5/14	25/19.5
		cfm	424/353	618/494	883/688
	Drive		Direct Drive	Direct Drive	Direct Drive
Temperature Control			Microprocessor Thermostat for Cooling and Heating	Microprocessor Thermostat for Cooling and Heating	Microprocessor Thermostat for Cooling and Heating
Sound Absorbing Thermal Insulation Material			Glass Wool	Glass Wool	Glass Wool
Air Filter			Resin Net (with Mold Resistant)	Resin Net (with Mold Resistant)	Resin Net (with Mold Resistant)
Piping Connections	Liquid Pipes	mm	ϕ6.4 (Flare Connection)	ϕ9.5 (Flare Connection)	ϕ9.5 (Flare Connection)
	Gas Pipes	mm	ϕ12.7 (Flare Connection)	ϕ15.9 (Flare Connection)	ϕ15.9 (Flare Connection)
	Drain Pipe	mm	VP20 (External Dia. 26 Internal Dia. 20)	VP20 (External Dia. 26 Internal Dia. 20)	VP20 (External Dia. 26 Internal Dia. 20)
Machine Weight (Mass)		kg	24	28	33
∗4 Sound Level (H/L) (220-240V)		dBA	36/31	39/34	45/37
Safety Devices			Fuse. Thermal Protector for Fan Motor.	Fuse. Thermal Protector for Fan Motor.	Fuse. Thermal Protector for Fan Motor.
Refrigerant Control			Electronic Expansion Valve	Electronic Expansion Valve	Electronic Expansion Valve
Connectable Outdoor Unit			R-410A P Series	R-410A P Series	R-410A P Series
Standard Accessories			Operation Manual. Installation Manual. Paper Pattern for Installation. Drain Hose. Clamp Metal. Insulation for Fitting. Clamps. Washers.	Operation Manual. Installation Manual. Paper Pattern for Installation. Drain Hose. Clamp Metal. Insulation for Fitting. Clamps. Washers.	Operation Manual. Installation Manual. Paper Pattern for Installation. Drain Hose. Clamp Metal. Insulation for Fitting. Clamps. Washers.
Drawing No.			C : 3D038815A		

Note:

∗1 Indoor temp. : 27°CDB, 19.5°CWB / outdoor temp. : 35°CDB / Equivalent piping length : 7.5 m, level difference : 0 m.
∗2 Indoor temp. : 27°CDB, 19.0°CWB / outdoor temp. : 35°CDB / Equivalent piping length : 7.5 m, level difference : 0 m.
3 Capacities are net, including a deduction for cooling (an addition for heating) for indoor fan motor heat.
∗4 Anechoic chamber conversion value, measured at a point 1 m in front of the unit and 1 m downward. During actual operation, these values are normally somewhat higher as a result of ambient conditions.
5 Refer to page 247 for Fan Motor Input.

Conversion Formulae
kcal/h=kW×860 Btu/h=kW×3412 cfm=m³/min×35.3

8

3. Dimensions

FXHQ32MA

Unit (mm)

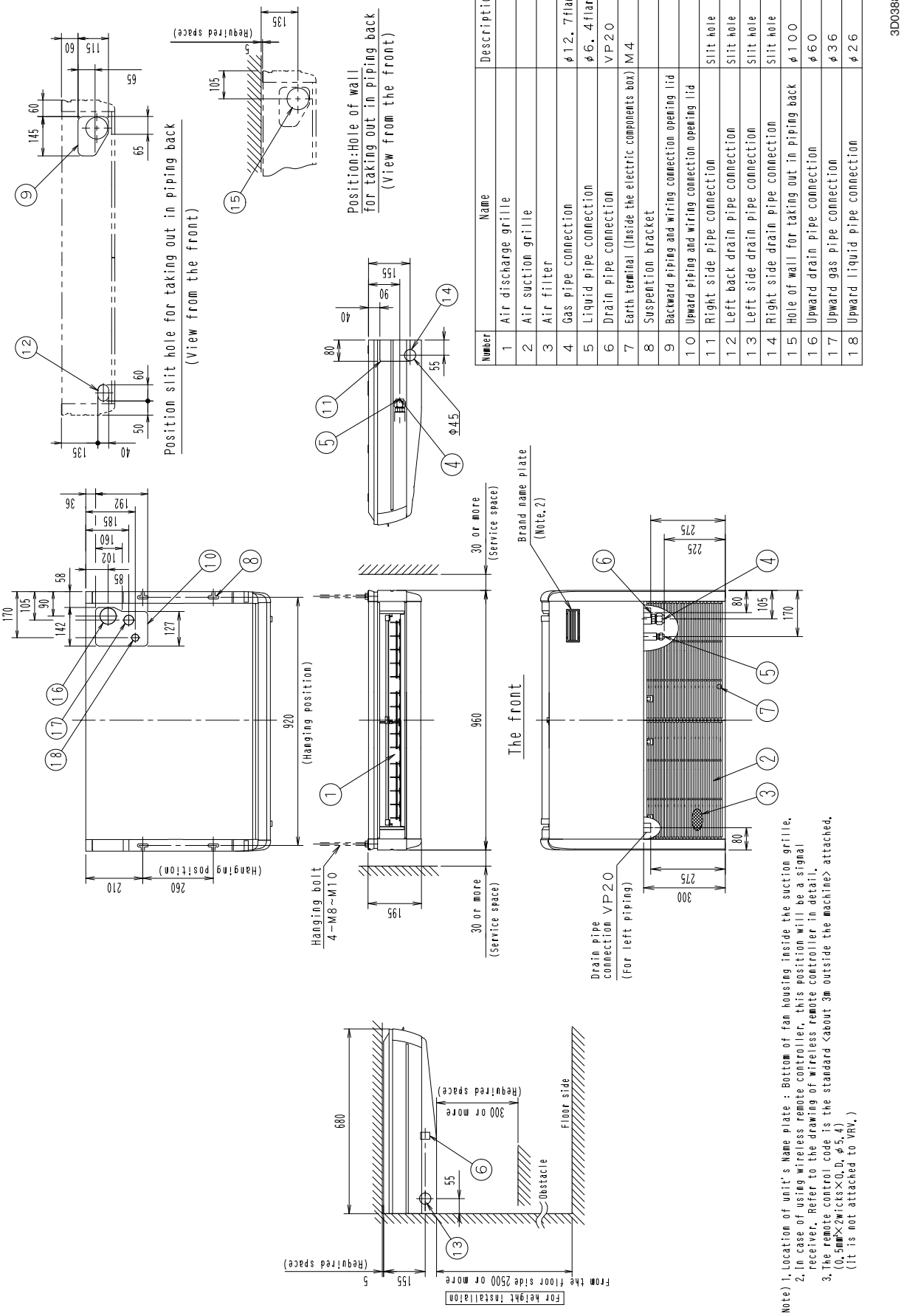

Number	Name	Description
1	Air discharge grille	
2	Air suction grille	
3	Air filter	
4	Gas pipe connection	φ12.7flare
5	Liquid pipe connection	φ6.4flare
6	Drain pipe connection	VP20
7	Earth terminal (Inside the electric components box)	M4
8	Suspention bracket	
9	Backward piping and wiring connection opening lid	
10	Upward piping and wiring connection opening lid	
11	Right side pipe connection	Slit hole
12	Left back drain pipe connection	Slit hole
13	Left side drain pipe connection	Slit hole
14	Right side drain pipe connection	Slit hole
15	Hole of wall for taking out in piping back	φ100
16	Upward drain pipe connection	φ60
17	Upward gas pipe connection	φ36
18	Upward liquid pipe connection	φ26

Note) 1. Location of unit's Name plate : Bottom of fan housing inside the suction grille.
2. In case of using wireless remote controller, this position will be a signal receiver. Refer to the drawing of wireless remote controller in detail.
3. The remote control code is the standard <about 3m outside the machine> attached. (0.5mm×2wicks×O.D.φ5.4) (It is not attached to VRV.)

FXHQ63MA

Unit (mm)

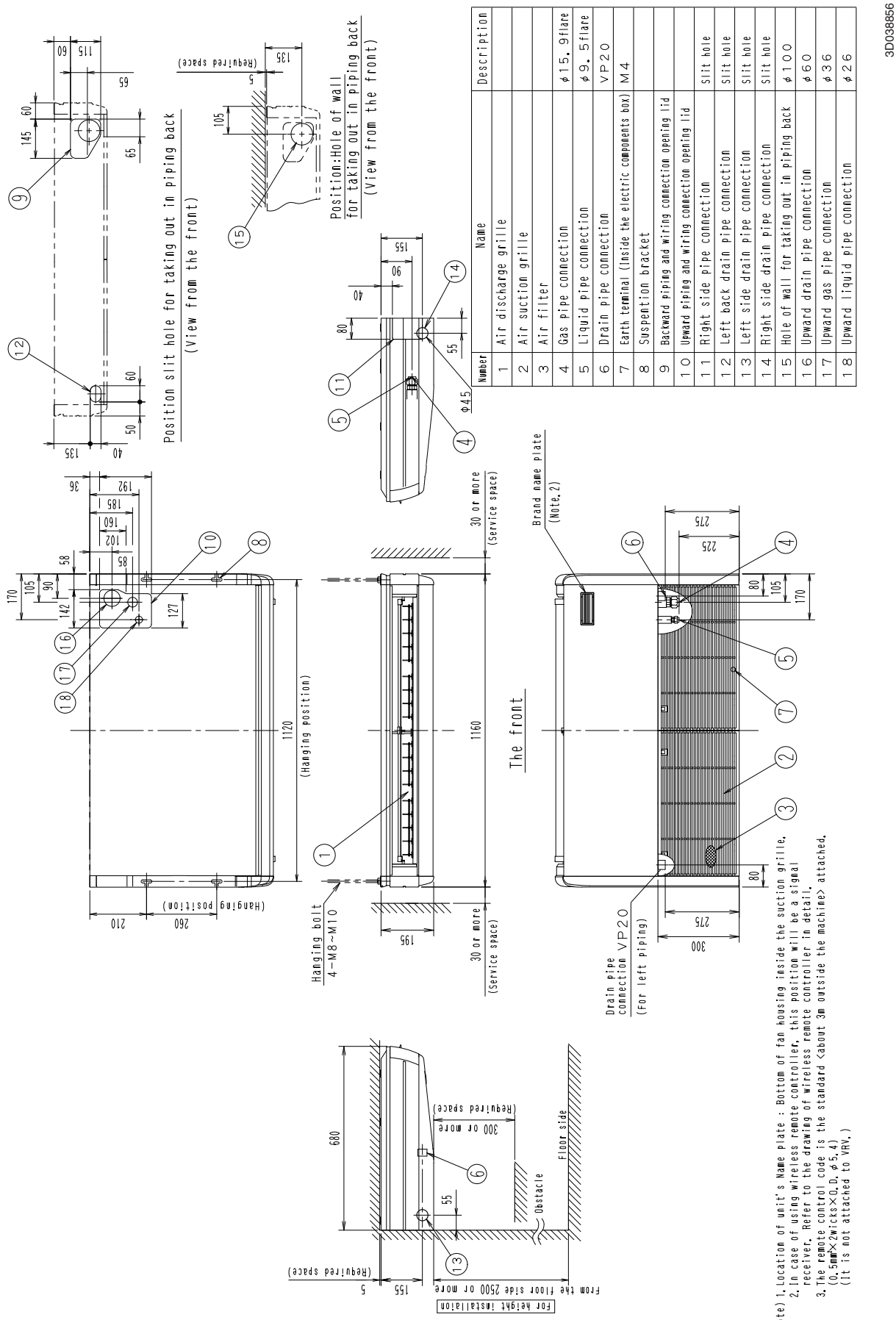

Number	Name	Description
1	Air discharge grille	
2	Air suction grille	
3	Air filter	
4	Gas pipe connection	φ15.9flare
5	Liquid pipe connection	φ9.5flare
6	Drain pipe connection	VP20
7	Earth terminal (Inside the electric components box)	M4
8	Suspention bracket	
9	Backward piping and wiring connection opening lid	
10	Upward piping and wiring connection opening lid	
11	Right side pipe connection	Slit hole
12	Left back drain pipe connection	Slit hole
13	Left side drain pipe connection	Slit hole
14	Right side drain pipe connection	Slit hole
15	Hole of wall for taking out in piping back	φ100
16	Upward drain pipe connection	φ60
17	Upward gas pipe connection	φ36
18	Upward liquid pipe connection	φ26

Note) 1. Location of unit's Name plate : Bottom of fan housing inside the suction grille.
2. In case of using wireless remote controller, this position will be a signal receiver. Refer to the drawing of wireless remote controller in detail.
3. The remote control code is the standard <about 3m outside the machine> attached. (0.5mm²×2wicks×O.D. φ5.4)
(It is not attached to VRV.)

8

FXHQ100MA

Unit (mm)

3D038857B

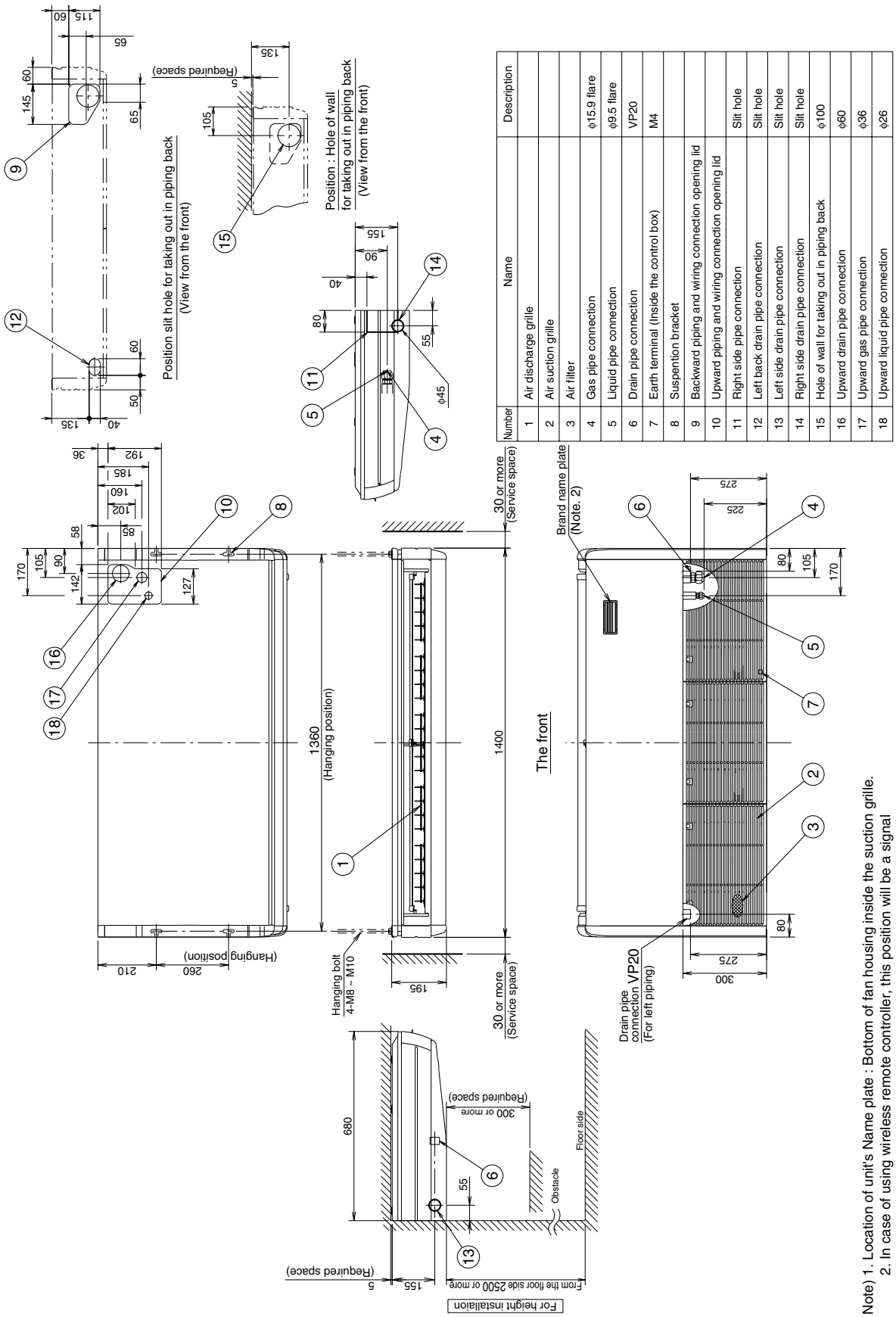

Number	Name	Description
1	Air discharge grille	
2	Air suction grille	
3	Air filter	
4	Gas pipe connection	φ15.9 flare
5	Liquid pipe connection	φ9.5 flare
6	Drain pipe connection	VP20
7	Earth terminal (Inside the control box)	M4
8	Suspention bracket	
9	Backward piping and wiring connection opening lid	
10	Upward piping and wiring connection opening lid	
11	Right side pipe connection	Slit hole
12	Left back drain pipe connection	Slit hole
13	Left side drain pipe connection	Slit hole
14	Right side drain pipe connection	Slit hole
15	Hole of wall for taking out in piping back	φ100
16	Upward drain pipe connection	φ60
17	Upward gas pipe connection	φ36
18	Upward liquid pipe connection	φ26

Note) 1. Location of unit's Name plate : Bottom of fan housing inside the suction grille.
2. In case of using wireless remote controller, this position will be a signal receiver. Refer to the drawing of wireless remote controller in detail.

4. Piping Diagrams

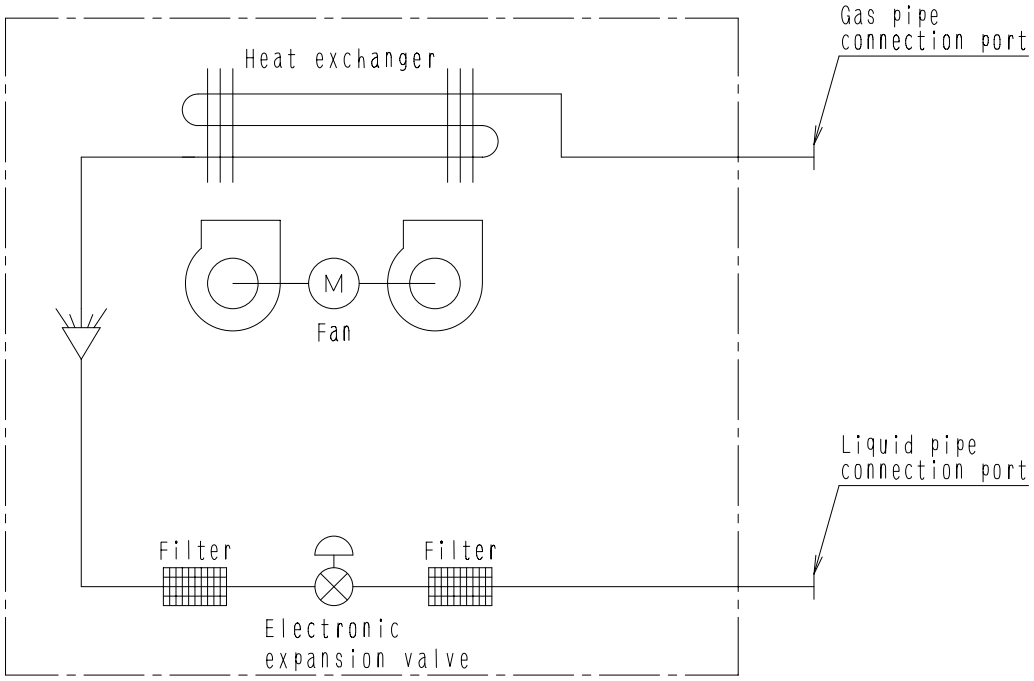

4D034245A

■ **Refrigerant pipe connection port diameters**

(mm)

Model	Gas	Liquid
FXHQ32MA	ϕ12.7	ϕ6.4
FXHQ63 · 100MA	ϕ15.9	ϕ9.5

5. Wiring Diagrams

FXHQ32 · 63 · 100MAVE

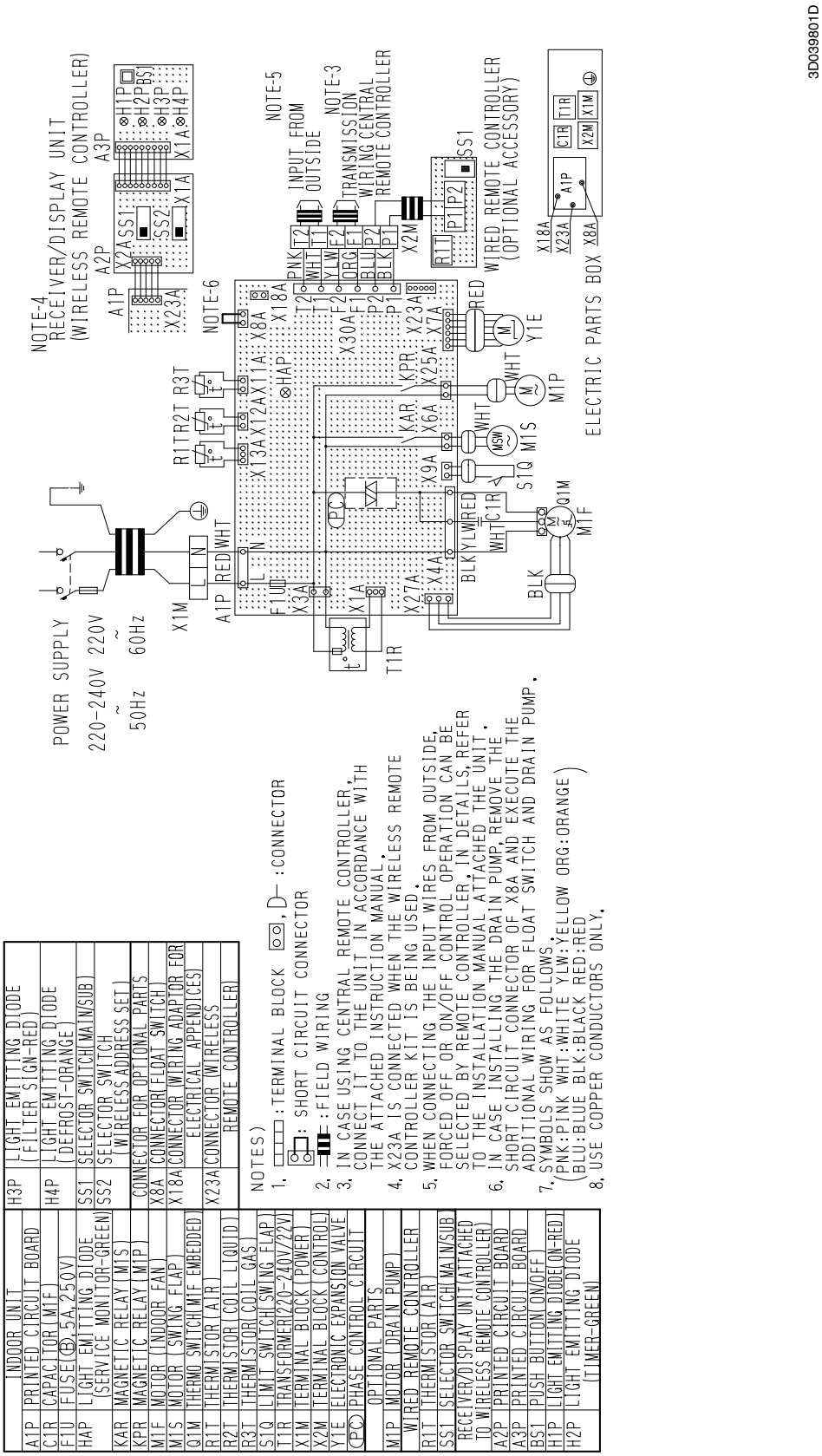

6. Electric Characteristics

Units				Power supply		IFM		Input(W)	
Model	Hz	Volts	Voltage range	MCA	MFA	KW	FLA	Cooling	Heating
FXHQ32MAVE	50	220-240	MAX. 264 Min. 198	0.8	15	0.062	0.6	111	111
FXHQ63MAVE				0.8	15	0.062	0.6	115	115
FXHQ100MAVE				0.9	15	0.130	0.7	135	135

Symbols:

MCA : Min. Circuit Amps (A)
MFA : Max. Fuse Amps (See note 5)
KW : Fan Motor Rated Output(KW)
FLA : Full Load Amps(A)
IFM : Indoor Fan Motor

8

Note:

1. Voltage range

   Units are suitable for use on electrical systems where voltage supplied to unit terminals is not below or above listed range limits.

2. Maximum allowable voltage unbalance between phases is 2%.

3. MCA/MFA

   MCA = 1.25 X FLA

   MFA ≦ 4 X FLA
   (Next lower standard fuse rating. Min.15A)

4. Select wire size based on the MCA.

5. Instead of fuse, use Circuit Breaker.

C : 4D035304B

7. Capacity Tables

7.1 Cooling Capacity

FXHQ-MA [50Hz]

Cooling capacity

Unit Size	Outdoor air temp. °CDB	Indoor air temp. 14.0°CWB 20°CDB TC	SC	16.0°CWB 23°CDB TC	SC	18.0°CWB 26°CDB TC	SC	19.0°CWB 27°CDB TC	SC	20.0°CWB 28°CDB TC	SC	22.0°CWB 30°CDB TC	SC	24.0°CWB 32°CDB TC	SC
32	10.0	2.4	2.3	2.9	2.6	3.4	2.8	3.6	2.9	3.8	2.9	4.3	3.0	4.7	3.1
	12.0	2.4	2.3	2.9	2.6	3.4	2.8	3.6	2.9	3.8	2.9	4.3	3.0	4.7	3.0
	14.0	2.4	2.3	2.9	2.6	3.4	2.8	3.6	2.9	3.8	2.9	4.3	3.0	4.6	3.0
	16.0	2.4	2.3	2.9	2.6	3.4	2.8	3.6	2.9	3.8	2.9	4.3	3.0	4.6	3.0
	18.0	2.4	2.3	2.9	2.6	3.4	2.8	3.6	2.9	3.8	2.9	4.3	3.0	4.5	2.9
	20.0	2.4	2.3	2.9	2.6	3.4	2.8	3.6	2.9	3.8	2.9	4.3	3.0	4.4	2.9
	21.0	2.4	2.3	2.9	2.6	3.4	2.8	3.6	2.9	3.8	2.9	4.3	3.0	4.4	2.9
	23.0	2.4	2.3	2.9	2.6	3.4	2.8	3.6	2.9	3.8	2.9	4.2	3.0	4.3	2.8
	25.0	2.4	2.3	2.9	2.6	3.4	2.8	3.6	2.9	3.8	2.9	4.2	2.9	4.3	2.8
	27.0	2.4	2.3	2.9	2.6	3.4	2.8	3.6	2.9	3.8	2.9	4.1	2.9	4.2	2.8
	29.0	2.4	2.3	2.9	2.6	3.4	2.8	3.6	2.9	3.8	2.9	4.1	2.9	4.2	2.7
	31.0	2.4	2.3	2.9	2.6	3.4	2.8	3.6	2.9	3.8	2.9	4.0	2.8	4.1	2.7
	33.0	2.4	2.3	2.9	2.6	3.4	2.8	3.6	2.9	3.8	2.9	3.9	2.8	4.0	2.7
	35.0	2.4	2.3	2.9	2.6	3.4	2.8	3.6	2.9	3.8	2.9	3.9	2.8	4.0	2.7
	37.0	2.4	2.3	2.9	2.6	3.4	2.8	3.6	2.9	3.7	2.9	3.8	2.8	3.9	2.7
	39.0	2.4	2.3	2.9	2.6	3.4	2.8	3.6	2.9	3.7	2.9	3.8	2.7	3.8	2.6
63	10.0	4.8	4.1	5.7	4.6	6.6	5.1	7.1	5.2	7.6	5.3	8.5	5.5	9.3	5.6
	12.0	4.8	4.1	5.7	4.6	6.6	5.1	7.1	5.2	7.6	5.3	8.5	5.5	9.2	5.5
	14.0	4.8	4.1	5.7	4.6	6.6	5.1	7.1	5.2	7.6	5.3	8.5	5.5	9.1	5.4
	16.0	4.8	4.1	5.7	4.6	6.6	5.1	7.1	5.2	7.6	5.3	8.5	5.5	9.0	5.3
	18.0	4.8	4.1	5.7	4.6	6.6	5.1	7.1	5.2	7.6	5.3	8.5	5.5	8.8	5.3
	20.0	4.8	4.1	5.7	4.6	6.6	5.1	7.1	5.2	7.6	5.3	8.5	5.5	8.7	5.2
	21.0	4.8	4.1	5.7	4.6	6.6	5.1	7.1	5.2	7.6	5.3	8.5	5.5	8.7	5.2
	23.0	4.8	4.1	5.7	4.6	6.6	5.1	7.1	5.2	7.6	5.3	8.4	5.4	8.5	5.1
	25.0	4.8	4.1	5.7	4.6	6.6	5.1	7.1	5.2	7.6	5.3	8.3	5.4	8.4	5.1
	27.0	4.8	4.1	5.7	4.6	6.6	5.1	7.1	5.2	7.6	5.3	8.1	5.3	8.3	5.0
	29.0	4.8	4.1	5.7	4.6	6.6	5.1	7.1	5.2	7.6	5.3	8.0	5.2	8.2	5.0
	31.0	4.8	4.1	5.7	4.6	6.6	5.1	7.1	5.2	7.6	5.3	7.9	5.1	8.1	4.9
	33.0	4.8	4.1	5.7	4.6	6.6	5.1	7.1	5.2	7.6	5.3	7.8	5.1	7.9	4.9
	35.0	4.8	4.1	5.7	4.6	6.6	5.1	7.1	5.2	7.5	5.3	7.7	5.1	7.8	4.8
	37.0	4.8	4.1	5.7	4.6	6.6	5.1	7.1	5.2	7.4	5.2	7.5	5.0	7.7	4.8
	39.0	4.8	4.1	5.7	4.6	6.6	5.1	7.1	5.2	7.2	5.1	7.4	5.0	7.6	4.7
100	10.0	7.6	6.2	9.0	6.9	10.5	7.8	11.2	8.0	11.9	8.1	13.4	8.5	14.7	8.7
	12.0	7.6	6.2	9.0	6.9	10.5	7.8	11.2	8.0	11.9	8.1	13.4	8.5	14.5	8.5
	14.0	7.6	6.2	9.0	6.9	10.5	7.8	11.2	8.0	11.9	8.1	13.4	8.5	14.4	8.4
	16.0	7.6	6.2	9.0	6.9	10.5	7.8	11.2	8.0	11.9	8.1	13.4	8.5	14.2	8.3
	18.0	7.6	6.2	9.0	6.9	10.5	7.8	11.2	8.0	11.9	8.1	13.4	8.5	14.0	8.2
	20.0	7.6	6.2	9.0	6.9	10.5	7.8	11.2	8.0	11.9	8.1	13.4	8.5	13.8	8.1
	21.0	7.6	6.2	9.0	6.9	10.5	7.8	11.2	8.0	11.9	8.1	13.4	8.5	13.7	8.0
	23.0	7.6	6.2	9.0	6.9	10.5	7.8	11.2	8.0	11.9	8.1	13.2	8.3	13.5	7.9
	25.0	7.6	6.2	9.0	6.9	10.5	7.8	11.2	8.0	11.9	8.1	13.0	8.2	13.3	7.8
	27.0	7.6	6.2	9.0	6.9	10.5	7.8	11.2	8.0	11.9	8.1	12.8	8.1	13.1	7.7
	29.0	7.6	6.2	9.0	6.9	10.5	7.8	11.2	8.0	11.9	8.1	12.6	8.0	12.9	7.6
	31.0	7.6	6.2	9.0	6.9	10.5	7.8	11.2	8.0	11.9	8.1	12.4	7.9	12.7	7.6
	33.0	7.6	6.2	9.0	6.9	10.5	7.8	11.2	8.0	11.9	8.1	12.2	7.8	12.5	7.5
	35.0	7.6	6.2	9.0	6.9	10.5	7.8	11.2	8.0	11.8	8.1	12.1	7.7	12.3	7.4
	37.0	7.6	6.2	9.0	6.9	10.5	7.8	11.2	8.0	11.6	8.0	11.9	7.7	12.2	7.3
	39.0	7.6	6.2	9.0	6.9	10.5	7.8	11.2	8.0	11.4	7.9	11.7	7.6	12.0	7.2

TC Total capacity ; kW
SC Sensible capacity ; kW

Refer to Outdoor Unit Capacity Tables : on page 411~, 470~, for the actual performance data of each indoor and outdoor unit combination.

8. Sound Levels

Overall

■ **Ceiling Suspended Type**

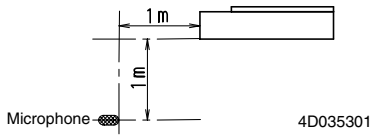

dBA

Model	220~240V, 50Hz	
	H	L
FXHQ32MA	36	31
FXHQ63MA	39	34
FXHQ100MA	45	37

Note:

1. The operating conditions are assumed to be standard (JIS conditions).
2. These operating values were obtained in a dead room (conversion values).
   Sound level will vary depending on a range of factors such as the construction (acoustic absorption coefficient) of the particular room in which the equipments installed.

Octave Band Level

○——○ 220~240V 50Hz

FXHQ32MAVE

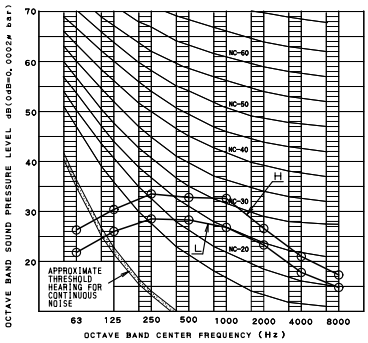

C : 4D035301

FXHQ63MAVE

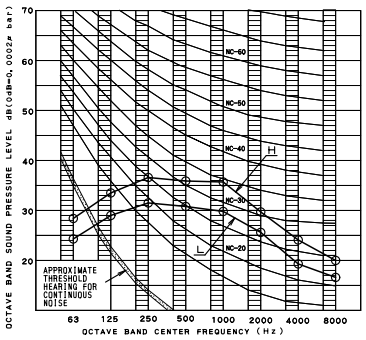

C : 4D035302

FXHQ100MAVE

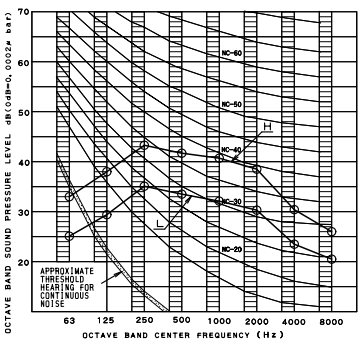

C : 4D035303

8

9. Installation

Installation Example

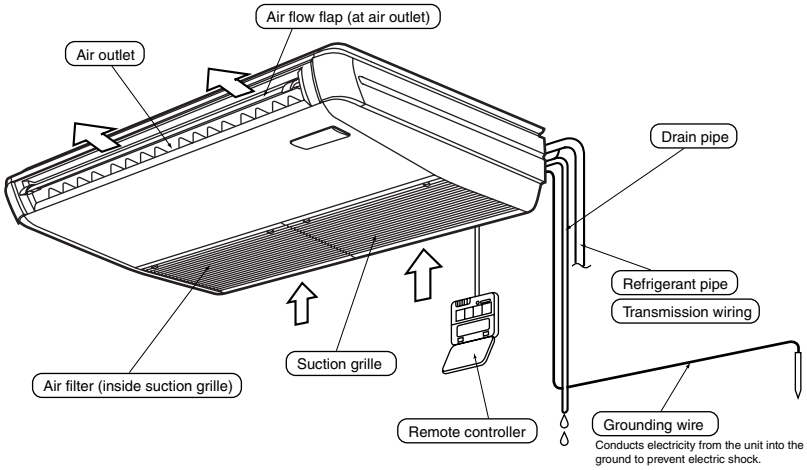

C : 3PN02401-4Y

Service Space

(1) Select an installation site where the following conditions are fulfilled and that meets your customer's approval.

- In the upper space of the indoor unit where there is no possible dripping of water from the refrigerant pipe, drain pipe, water pipe, etc.
- Where optimum air distribution can be ensured.
- Where nothing blocks air passage.
- Where condensate can be properly drained.
- If supporting structural members are not strong enough to take the unit's weight, the unit could fall out of place and cause serious injury.
- Where the false ceiling is not noticeably on an incline.
- Where there is no risk of flammable gas leakage.
- Where sufficient clearance for maintenance and service can be ensured. **(Refer to Fig. 1)**
  If sufficient clearance could be ensured at*, leave a space of 200 mm or more between the unit and it's surroundings easier maintenance and service.
- Where piping between indoor and outdoor units is possible within the allowable limit. (Refer to the installation manual for the outdoor unit.)

⚠ CAUTION

- Install the indoor and outdoor units, power supply wiring and connecting wires at least 1 meter away from televisions or radios in order to prevent image interference or noise.
  (Depending on the radio waves, a distance of 1 meter may not be sufficient enough to eliminate the noise.)

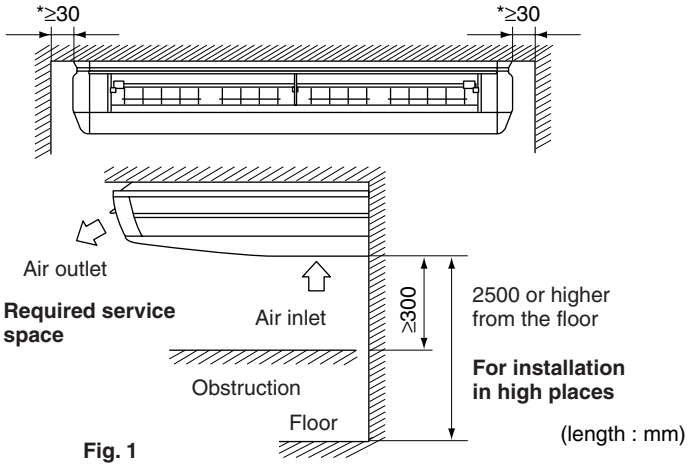

Fig. 1

(2) This indoor unit may be installed on ceilings up to 3.5 m in height. However, if the ceiling is higher than 2.7m, the remote control will have to be set locally. (Refer to "FIELD SETTING")

(3) Use suspension bolts for installation. Check whether the ceiling is strong enough to support the weight of the unit or not. If there is a risk, reinforce the ceiling before installing the unit.
(Installation pitch is marked on the paper pattern for installation. Refer to it to check for points requiring reinforcing.)

C : 3PN01417-7P

Bolt Pitch

(1) Relative positions of indoor unit, suspension bolt, piping hole, drain piping hole, and electric wire hole position. (Refer to Fig. 2)

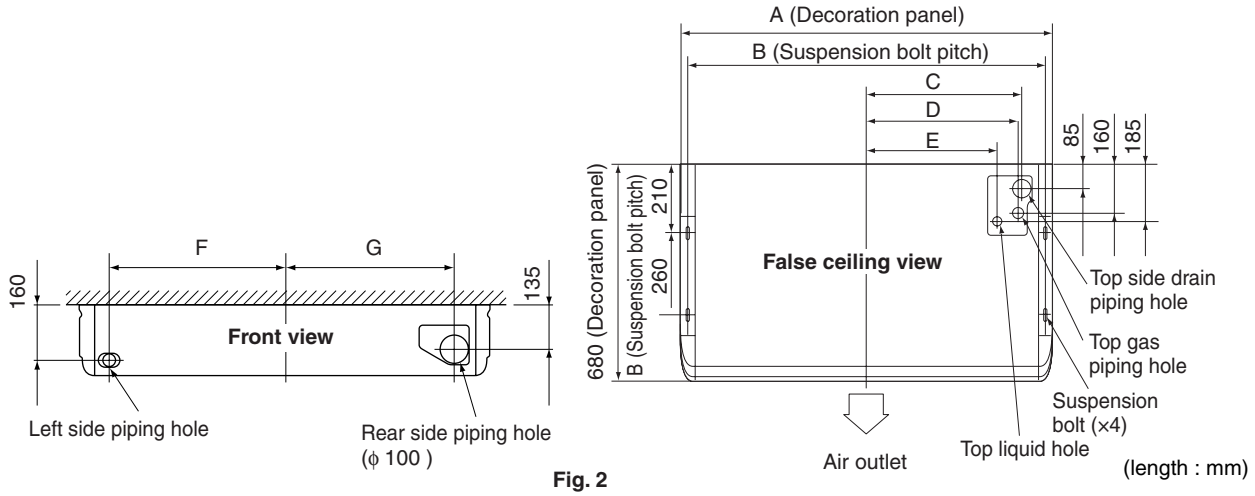

Fig. 2

Model	A	B	C	D	E	F	G
FXHQ32M(A)VE	960	920	390	375	310	400	375
FXHQ63M(A)VE	1160	1120	490	475	410	500	475
FXHQ100M(A)VE	1400	1360	610	595	530	620	595

(2) Make the suspension bolt hole, piping hole, drain piping hole.

- Refer to the paper pattern for installation for hole positions.
- Fix the positions for suspension bolt, piping hole, drain piping hole, and electric wire hole, and make the openings.

C : 3P172532-7

Drain Piping Work

Rig the drain pipe as shown below and take measures against condensation. Improperly rigged piping could lead to leaks and eventually wet furniture and belongings.

(1) Carry out the drain piping.

- For drain work, rig the pipes so that they drain reliably.
- The drain pipe outlet direction can be chosen from the right rear, right, left rear, and left. Refer to “REFRIGERANT PIPING WORK” for right rear and right direction, and refer to Fig. 20 for left rear and left direction.

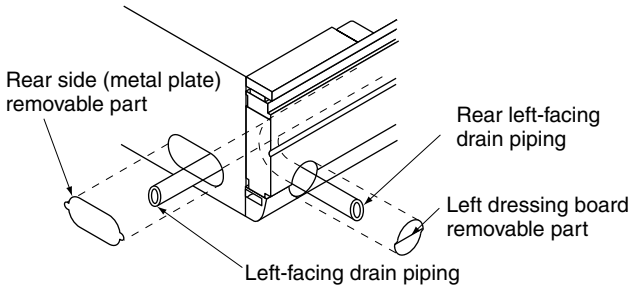

Fig. 20

- For left drain pipe outlet, remove the rubber plug and the insulation on the drain pipe connecting opening on the left side of the unit and change the position to the right side.
- Insert the rubber stopper securely, all the way to the base, in order to prevent water leakage.
- The diameter of the drain pipe should be greater than or equal to the diameter of the connecting pipe. (Vinyl tube ; pipe size : 20 mm ; outer dimension : 26 mm)
- Keep the drain pipe short and sloping downwards at a gradient of at least 1/100 to prevent air pockets from forming. **(Refer to Fig. 21)**
- Use the drain hose (1) and the metal clamp (2).
  Insert the drain hose into the drain socket, up to the gray tape. **(Refer to Fig. 22)**
  Tighten the metal clamp until the screw head is less than 4 mm from the hose. **(Refer to Fig. 23)**
  (Be careful of the installation direction. Install so that the metal clamp does not contact the intake grill.)
- Wrap the sealing pad (8) (accessory) over the clamp and drain hose to insulate. **(Refer to Fig. 23)**
- No folding of drain hose inside the indoor unit. **(Refer to Fig. 24)**
  (If there is slack in the drain hose, it may cause damage to the intake grill.)

C : 3P172532-7

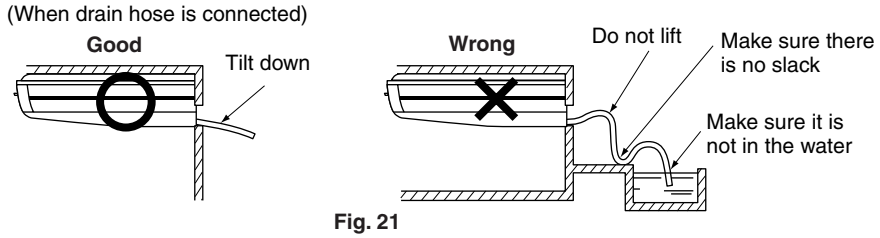

Fig. 21

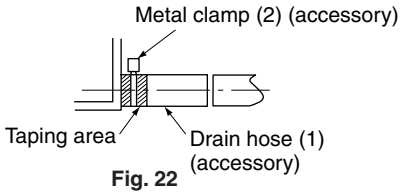

Fig. 22

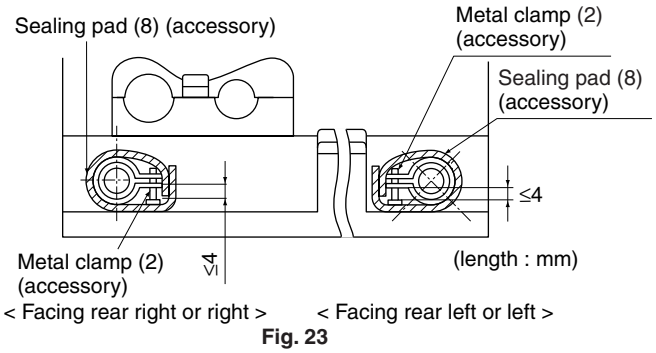

Fig. 23

NOTE

- To ensure no excessive pressure is applied to the included drain hose (1), do not bend or twist when installing. (This may cause leakage.)
- If converging multiple drain pipes, install according to the procedure shown below.

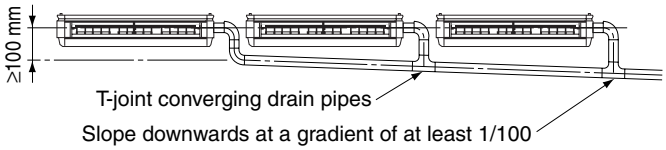

Select converging drain pipes whose gauge is suitable for the operating capacity of the unit.

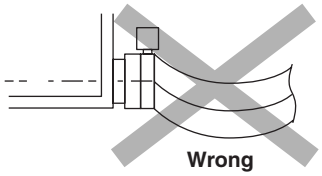

Fig. 24

(2) Confirm that smooth drainage is achieved after the piping work.

- Add 0.6 liter of water in the drain pan from the air outlet for confirming drainage. **(Refer to Fig. 25)**

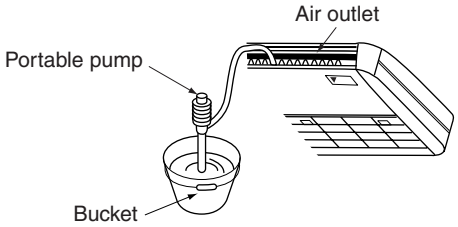

Fig. 25

CAUTION

- Drain piping connections
  Do not connect the drain piping directly to sewage pipes that smell of ammonia. The ammonia in the sewage might enter the indoor unit through the drain pipes and corrode the heat exchanger.
- Keep in mind that it will become the cause of getting drain pipe blocked if water collects on drain pipe.

10. Accessories

Standard Accessories

FXHQ32~100MA

Name	(1) Drain hose	(2) Metal clamp	(3) Washer for hanging bracket	(4) Clamp	(5) Paper pattern for installation	Insulation for fitting
Quantity	1 pc.	1 pc.	8 pcs.	6 pcs.	1 pc.	1 each
Shape						(6)For gas pipe (7)For liquid pipe

Name	Sealing pad	
Quantity	1 each	
Shape	(8) Large (9) Small	(Other) • Operation manual • Installation manual

C : 3P172532-7

Optional Accessories (For Unit)

No.	Model / Item	FXHQ32MAVE	FXHQ63MAVE	FXHQ100MAVE
1	Drain pump kit	KDU50M60VE	KDU50M125VE	
2	Replacement long-life filter (Resin net)	KAFJ501D56	KAFJ501D80	KAFJ501D112
3	L-type piping kit (for upward direction)	KHFP5M35	KHFP5M63	

C : 4D040446A

Optional Accessories (For Controls) : Refer to P.561

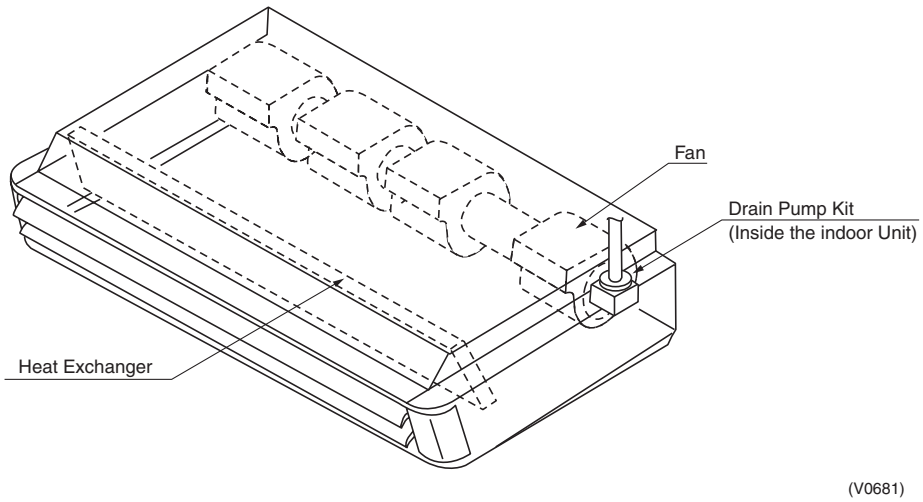

Drain Pump Kit

Specifications

Items \ Model		KDU50M60VE	KDU50M125VE	
Drain-up Lift (mm)		600		
Drain Con. Diameter		VP20 (Ex. dia. ϕ26, Int. dia. ϕ20)		
Pump	Power Supply	Single phase 220-240V/220V 50Hz (from Indoor Unit PC Board)		
	Power Consumption (W)	20/17 (50Hz)		
Applicable Models		32 class	63 class	100 class

Precaution at use

1. Don't turn off the power within 5 minutes after cooling operation stops.
2. The liquid crystal display blinks to inform us that safety device actuated.
3. When cooling operation's season is over, extract drain water.

Installation guide of the drain pump kit

<Changes in drain pump kit>

- Exit drain pipe has been changed from VP25 to VP20 (to meet the drain diameter of main frame).
- Attached drain pipe (450 mm chloride vinyl straight pipe bellow, elbow) -> only bellow hose for VP20
- All units of drain up height was unified to 600mm (From the bottom of the ceiling)

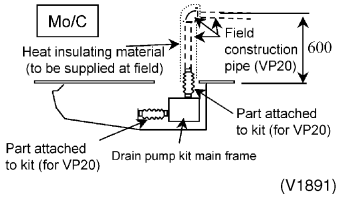

Wiring diagram

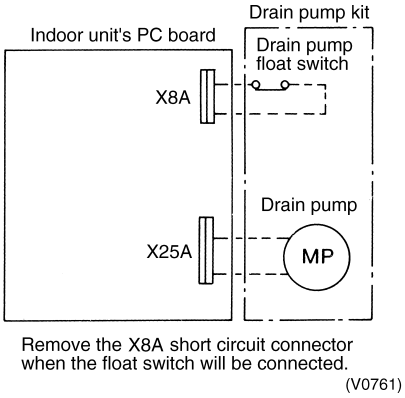

L Shape Connection Pipe Kit

Application purpose

This kit must be bent inside the unit as shown below, when the refrigerant piping is carried out in a ceiling space. This L shape kit is an optional accessory which has been developed for improving the work of the processing on site.

Installation

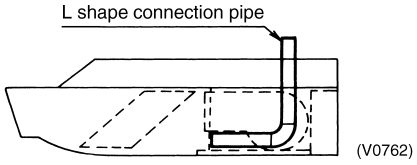

FXAQ-MA
Wall Mounted Type

1. Features 256
2. Specifications 257
3. Dimensions 259
4. Piping Diagrams 262
5. Wiring Diagrams 263
6. Electric Characteristics 264
7. Capacity Tables 265
   7.1 Cooling Capacity 265
8. Sound Levels 266
9. Installation 267
10. Accessories 275

1. Features

External Appearance

- Compact and stylish design that does not detract from the decor of the room.

- More compact than compared with previous model. (50, 63 class)

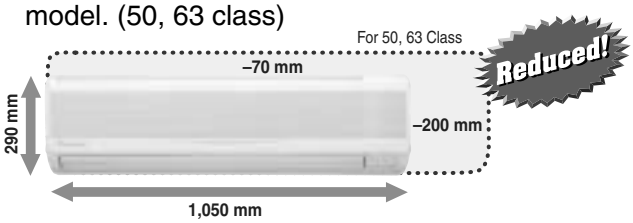

  - Drastic 10 kg weight reduction from 24 kg to 14 kg.
  - Volume reduced by 22%.
  - Space savings of up to 47%.

- Low operating sound

(220V-240V)(dB(A))

Class	20	25	32	40	50	63
Operating sound (H/L)	35/29	36/29	37/29	39/34	42/36	46/39

- Drain pan and air filter can be kept clean by mildew-proof polystyrene.

- Washable grille, the front grille can be easily removed for washing.

- Auto-swing ensures efficiency of air distribution. The louver closes automatically when the unit stops.

- 5 steps of discharge angle can be set by remote controller.

- Discharge angle is automatically set at the same angle as the previous operation when restarts. (Initial setting; 10˚ for cooling and 70˚ for heating)

- Drain-pump kit is available as optional accessory, which lifts the drain 1,000mm from the bottom of the unit.

- Flexible installation.
  - Drain pipe can be fitted to from either left or right sides.

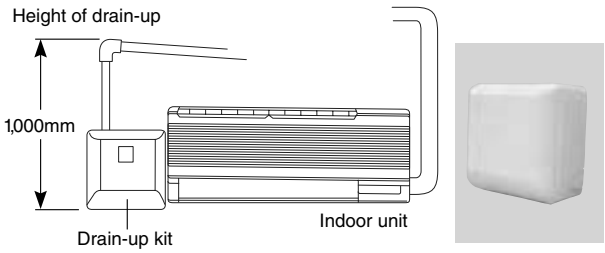

2. Specifications

Wall Mounted Type

Model			FXAQ20MAVE	FXAQ25MAVE	FXAQ32MAVE
∗1 Cooling Capacity (19.5°CWB)		kcal/h	2,000	2,500	3,200
		Btu/h	7,800	9,900	12,600
		kW	2.3	2.9	3.7
∗2 Cooling Capacity (19.0°CWB)		kW	2.2	2.8	3.6
Casing Color			White (3.0Y8.5/0.5)	White (3.0Y8.5/0.5)	White (3.0Y8.5/0.5)
Dimensions: (H×W×D)		mm	290×795×230	290×795×230	290×795×230
Coil (Cross Fin Coil)	Rows×Stages×Fin Pitch	mm	2×14×1.4	2×14×1.4	2×14×1.4
	Face Area	m²	0.161	0.161	0.161
Fan	Model		QCL9661M	QCL9661M	QCL9661M
	Type		Cross Flow Fan	Cross Flow Fan	Cross Flow Fan
	Motor Output × Number of Units	W	40×1	40×1	40×1
	Air Flow Rate (H/L)	m³/min	7.5/4.5	8/5	9/5.5
		cfm	265/159	282/177	318/194
	Drive		Direct Drive	Direct Drive	Direct Drive
Temperature Control			Microprocessor Thermostat for Cooling and Heating	Microprocessor Thermostat for Cooling and Heating	Microprocessor Thermostat for Cooling and Heating
Sound Absorbing Thermal Insulation Material			Foamed Polystyrene / Foamed Polyethylene	Foamed Polystyrene / Foamed Polyethylene	Foamed Polystyrene / Foamed Polyethylene
Air Filter			Resin Net (Washable)	Resin Net (Washable)	Resin Net (Washable)
Piping Connections	Liquid Pipes	mm	ϕ6.4 (Flare Connection)	ϕ6.4 (Flare Connection)	ϕ6.4 (Flare Connection)
	Gas Pipes	mm	ϕ12.7 (Flare Connection)	ϕ12.7 (Flare Connection)	ϕ12.7 (Flare Connection)
	Drain Pipe	mm	VP13 (External Dia. 18 Internal Dia. 13)	VP13 (External Dia. 18 Internal Dia. 13)	VP13 (External Dia. 18 Internal Dia. 13)
Machine Weight (Mass)		kg	11	11	11
∗4 Sound Level (H/L) (220-240V)		dBA	35/29	36/29	37/29
Safety Devices			Fuse	Fuse	Fuse
Refrigerant Control			Electronic Expansion Valve	Electronic Expansion Valve	Electronic Expansion Valve
Connectable Outdoor Unit			R-410A P Series	R-410A P Series	R-410A P Series
Standard Accessories			Operation Manual. Installation Manual. Installation Panel. Paper Pattern for Installation. Insulation Tape. Clamps. Screws.	Operation Manual. Installation Manual. Installation Panel. Paper Pattern for Installation. Insulation Tape. Clamps. Screws.	Operation Manual. Installation Manual. Installation Panel. Paper Pattern for Installation. Insulation Tape. Clamps. Screws.
Drawing No.			C : 3D039370B		

Note:

∗1 Indoor temp. : 27°CDB, 19.5°CWB / outdoor temp. : 35°CDB / Equivalent piping length : 7.5 m, level difference : 0 m.
∗2 Indoor temp. : 27°CDB, 19.0°CWB / outdoor temp. : 35°CDB / Equivalent piping length :7.5 m, level difference : 0 m.
3 Capacities are net, including a deduction for cooling (an addition for heating) for indoor fan motor heat.
∗4 Anechoic chamber conversion value, measured at a point 1 m in front of the unit and 1 m downward. During actual operation, these values are normally somewhat higher as a result of ambient conditions.
5 Refer to page 264 for Fan Motor Input.

Conversion Formulae
kcal/h=kW×860 Btu/h=kW×3412 cfm=m³/min×35.3

9

Wall Mounted Type

Model			FXAQ40MAVE	FXAQ50MAVE	FXAQ63MAVE
∗1 Cooling Capacity (19.5°CWB)		kcal/h	4,000	5,000	6,300
		Btu/h	16,000	19,800	24,900
		kW	4.7	5.8	7.3
∗2 Cooling Capacity (19.0°CWB)		kW	4.5	5.6	7.1
Casing Color			White (3.0Y8.5/0.5)	White (3.0Y8.5/0.5)	White (3.0Y8.5/0.5)
Dimensions: (H×W×D)		mm	290×1,050×230	290×1,050×230	290×1,050×230
Coil (Cross Fin Coil)	Rows×Stages×Fin Pitch	mm	2×14×1.4	2×14×1.4	2×14×1.4
	Face Area	m²	0.213	0.213	0.213
Fan	Model		QCL9686M	QCL9686M	QCL9686M
	Type		Cross Flow Fan	Cross Flow Fan	Cross Flow Fan
	Motor Output × Number of Units	W	43×1	43×1	43×1
	Air Flow Rate (H/L)	m³/min	12/9	15/12	19/14
		cfm	424/318	530/424	671/494
	Drive		Direct Drive	Direct Drive	Direct Drive
Temperature Control			Microprocessor Thermostat for Cooling and Heating	Microprocessor Thermostat for Cooling and Heating	Microprocessor Thermostat for Cooling and Heating
Sound Absorbing Thermal Insulation Material			Foamed Polystyrene / Foamed Polyethylene	Foamed Polystyrene / Foamed Polyethylene	Foamed Polystyrene / Foamed Polyethylene
Air Filter			Resin Net (Washable)	Resin Net (Washable)	Resin Net (Washable)
Piping Connections	Liquid Pipes	mm	ϕ6.4 (Flare Connection)	ϕ6.4 (Flare Connection)	ϕ9.5 (Flare Connection)
	Gas Pipes	mm	ϕ12.7 (Flare Connection)	ϕ12.7 (Flare Connection)	ϕ15.9 (Flare Connection)
	Drain Pipe	mm	VP13 (External Dia. 18 Internal Dia. 13)	VP13 (External Dia. 18 Internal Dia. 13)	VP13 (External Dia. 18 Internal Dia. 13)
Machine Weight (Mass)		kg	14	14	14
∗4 Sound Level (H/L) (220-240V)		dBA	39/34	42/36	46/39
Safety Devices			Fuse	Fuse	Fuse
Refrigerant Control			Electronic Expansion Valve	Electronic Expansion Valve	Electronic Expansion Valve
Connectable Outdoor Unit			R-410A P Series	R-410A P Series	R-410A P Series
Standard Accessories			Operation Manual. Installation Manual. Installation Panel. Paper Pattern for Installation. Insulation Tape. Clamps. Screws.	Operation Manual. Installation Manual. Installation Panel. Paper Pattern for Installation. Insulation Tape. Clamps. Screws.	Operation Manual. Installation Manual. Installation Panel. Paper Pattern for Installation. Insulation Tape. Clamps. Screws.
Drawing No.			C : 3D039370B		

Note:

∗1 Indoor temp. : 27°CDB, 19.5°CWB / outdoor temp : 35°CDB / Equivalent piping length : 7.5 m, level difference : 0 m.
∗2 Indoor temp. : 27°CDB, 19.0°CWB / outdoor temp : 35°CDB / Equivalent piping length : 7.5 m, level difference : 0 m.
3 Capacities are net, including a deduction for cooling (an addition for heating) for indoor fan motor heat.
∗4 Anechoic chamber conversion value, measured at a point 1 m in front of the unit and 1 m downward. During actual operation, these values are normally somewhat higher as a result of ambient conditions.
5 Refer to page 264 for Fan Motor Input.

Conversion Formulae
kcal/h=kW×860 Btu/h=kW×3412 cfm=m³/min×35.3

3. Dimensions

FXAQ20MA
FXAQ25MA
FXAQ32MA

Unit (mm)

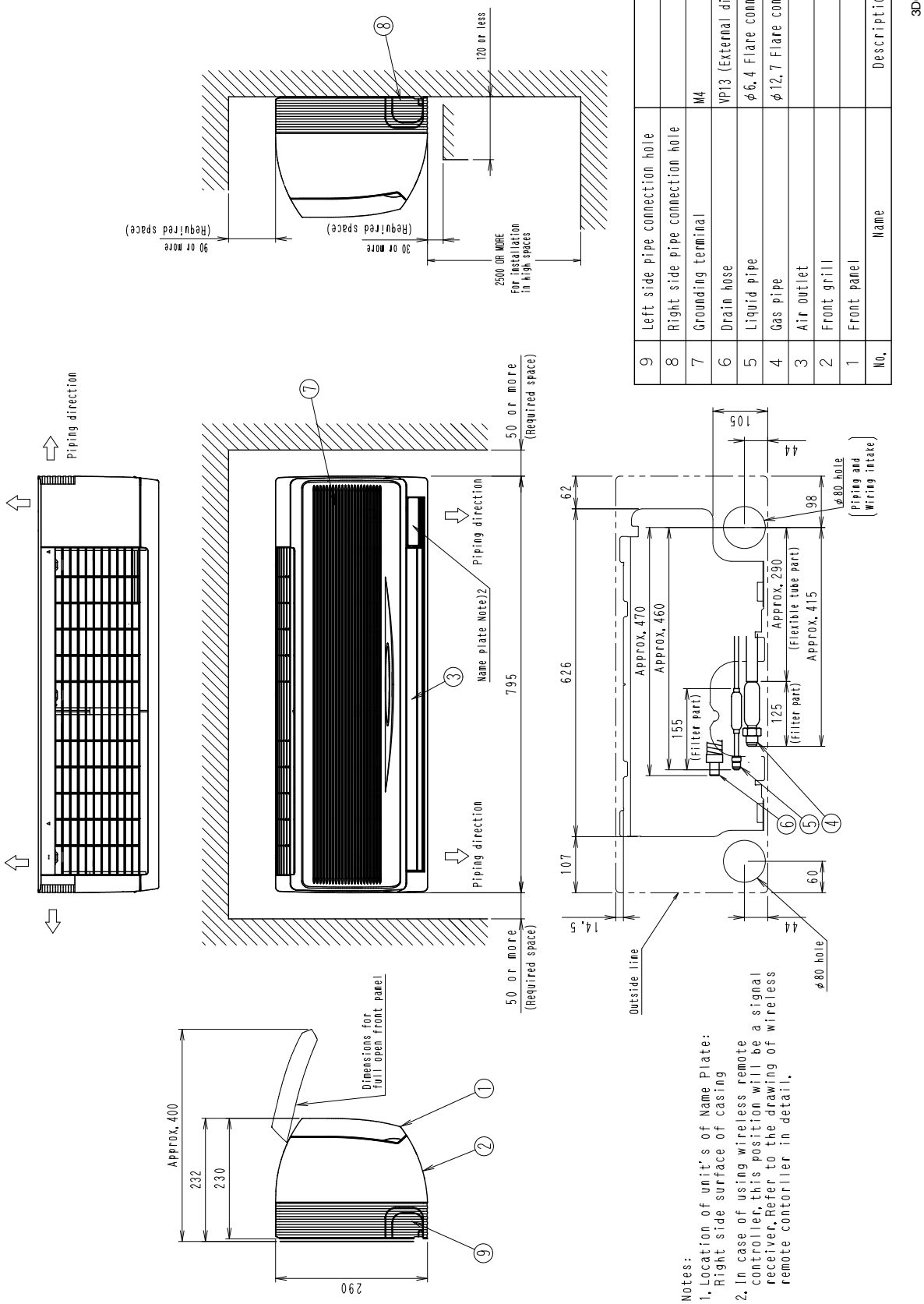

No.	Name	Description
9	Left side pipe connection hole	
8	Right side pipe connection hole	
7	Grounding terminal	M4
6	Drain hose	VP13 (External dia. φ18)
5	Liquid pipe	φ6.4 Flare connection
4	Gas pipe	φ12.7 Flare connection
3	Air outlet	
2	Front grill	
1	Front panel	

Notes:
1. Location of unit's of Name Plate: Right side surface of casing
2. In case of using wireless remote controller, this position will be a signal receiver. Refer to the drawing of wireless remote controller in detail.

9

FXAQ40MA
FXAQ50MA

Unit (mm)

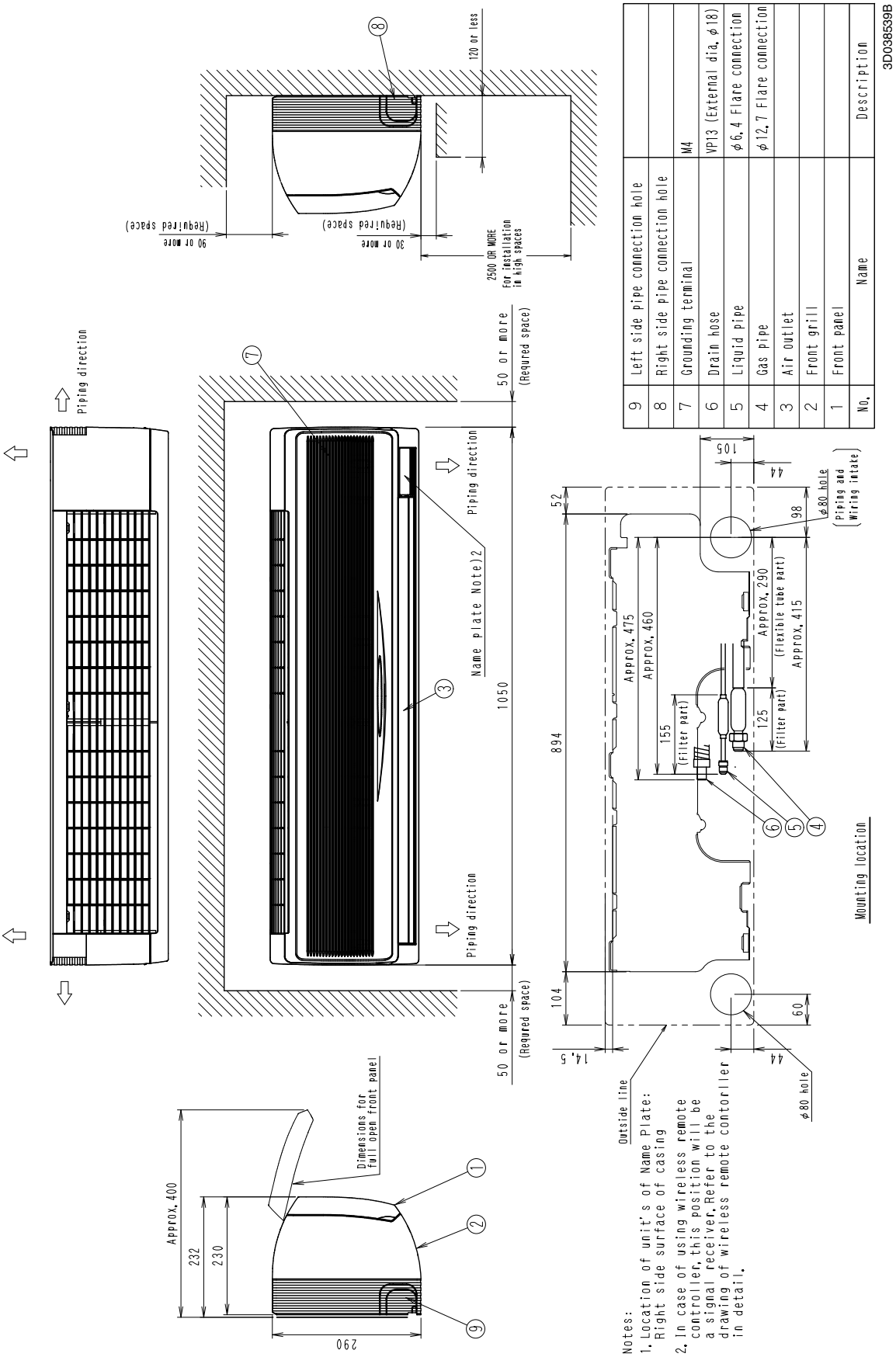

No.	Name	Description
9	Left side pipe connection hole	
8	Right side pipe connection hole	
7	Grounding terminal	M4
6	Drain hose	VP13 (External dia. φ18)
5	Liquid pipe	φ6.4 Flare connection
4	Gas pipe	φ12.7 Flare connection
3	Air outlet	
2	Front grill	
1	Front panel	

Notes:
1. Location of unit's of Name Plate: Right side surface of casing
2. In case of using wireless remote controller, this position will be a signal receiver. Refer to the drawing of wireless remote controller in detail.

FXAQ63MA

Unit (mm)

No.	Name	Description
9	Left side pipe connection hole	
8	Right side pipe connection hole	
7	Grounding terminal	M4
6	Drain hose	VP13 (External dia. φ18)
5	Liquid pipe	φ9.5 Flare connection
4	Gas pipe	φ15.9 Flare connection
3	Air outlet	
2	Front grill	
1	Front panel	

3D038541B

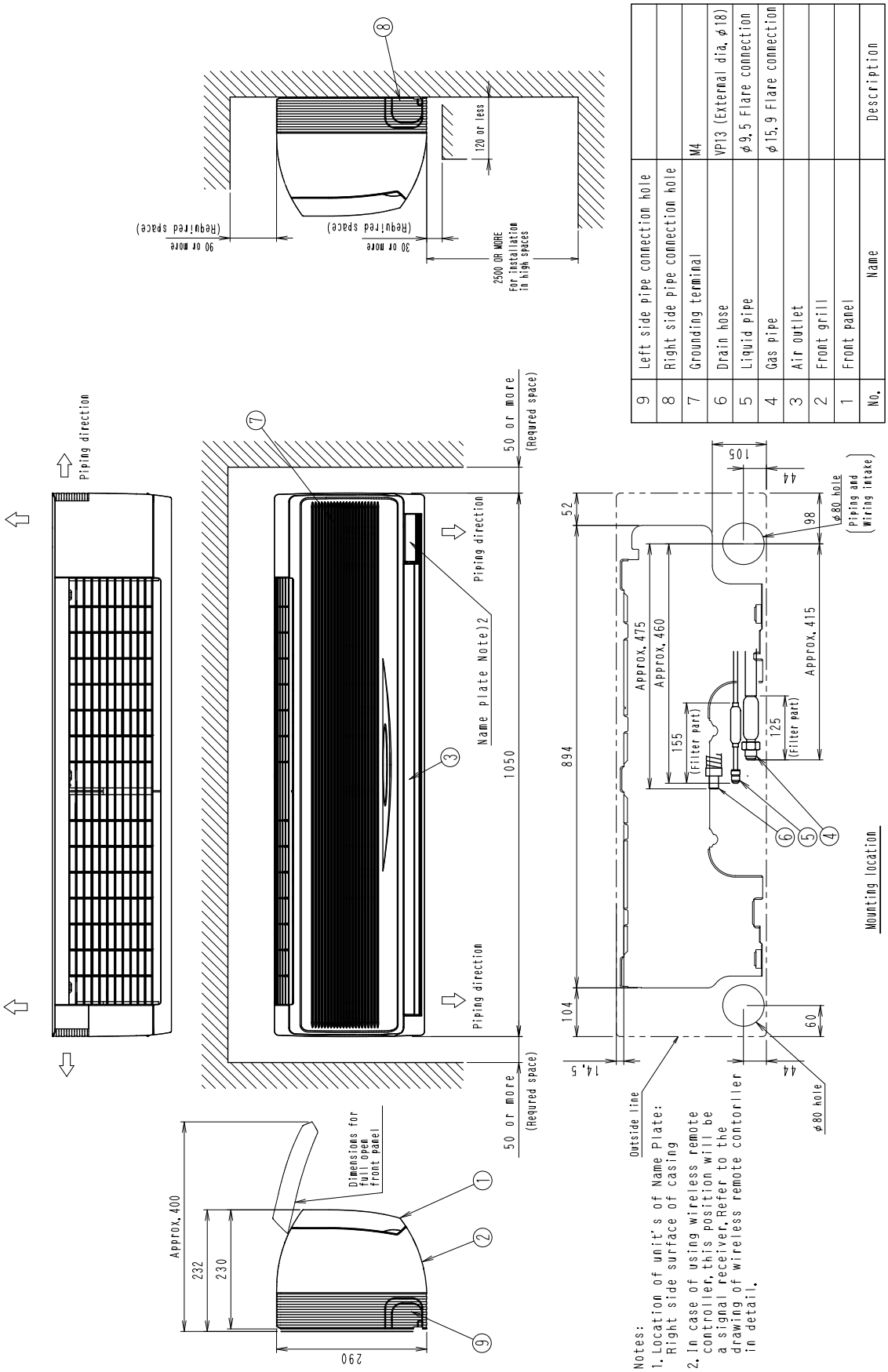

4. Piping Diagrams

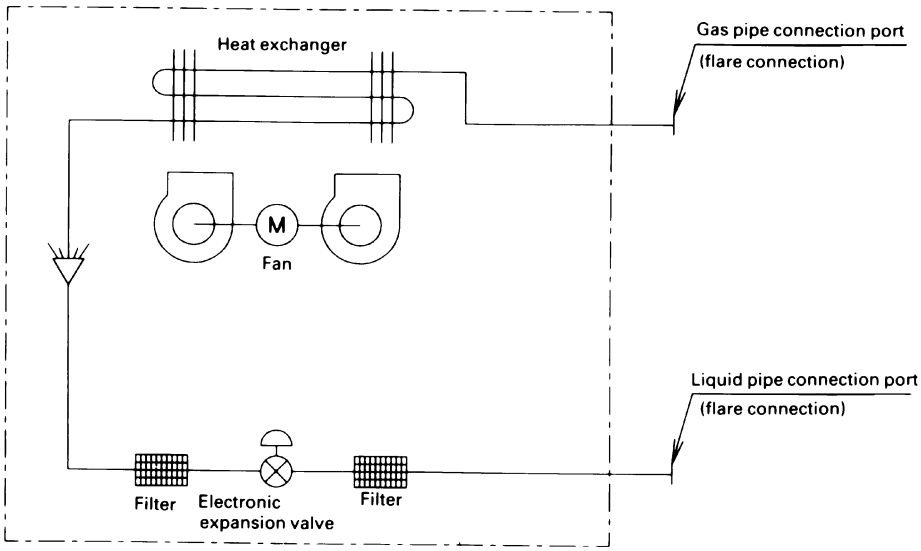

JC : DU220-602J

■ **Refrigerant pipe connection port diameters**

(mm)

Model	Gas	Liquid
FXAQ20 · 25 · 32 · 40 · 50MA	ϕ12.7	ϕ6.4
FXAQ63MA	ϕ15.9	ϕ9.5

5. Wiring Diagrams

FXAQ20 · 25 · 32 · 40 · 50 · 63MAVE

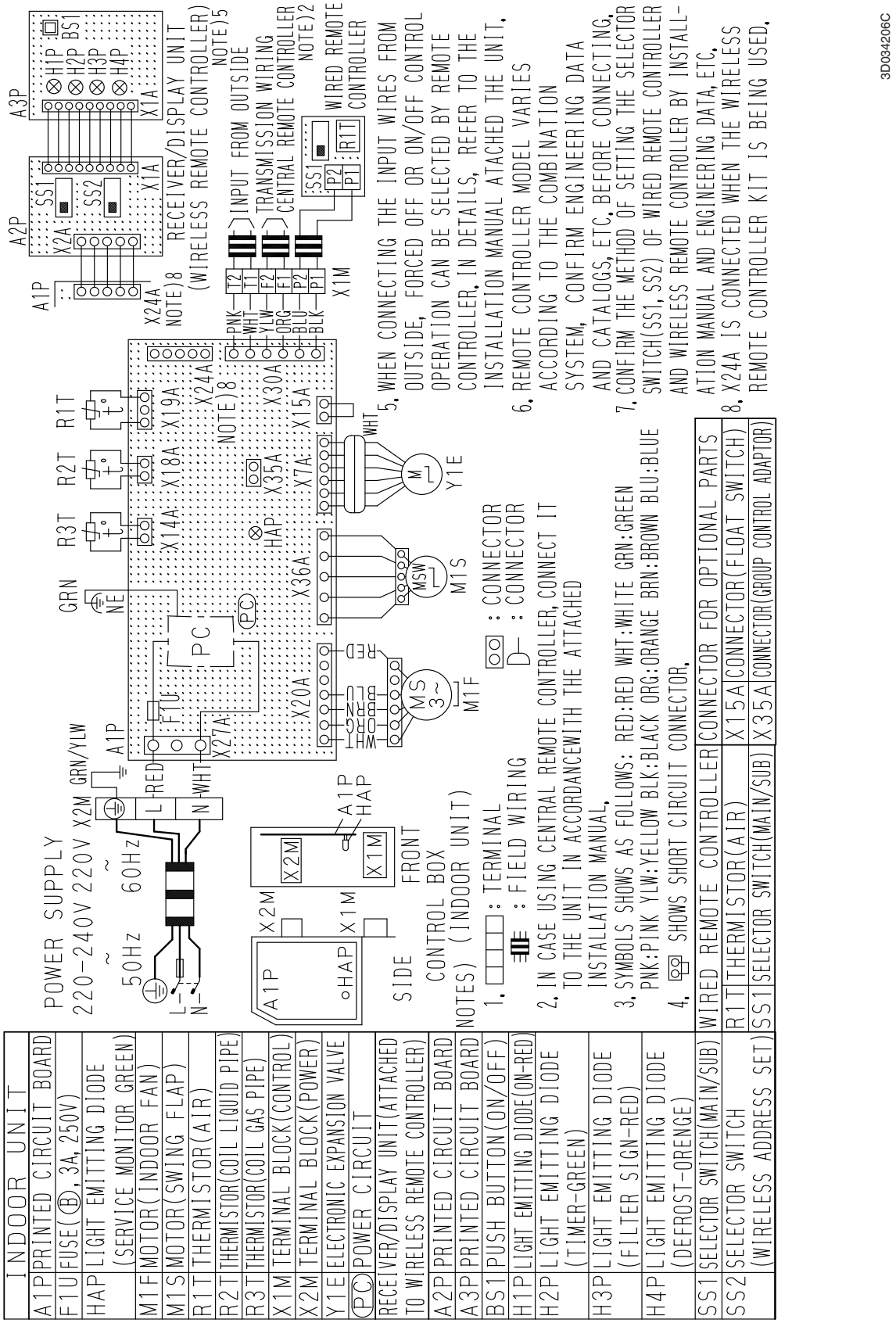

6. Electric Characteristics

Units					Power supply		IFM		Input(W)	
Model	Type	Hz	Volts	Voltage range	MCA	MFA	kW	FLA	Cooling	Heating
FXAQ20MA	VE	50	220-240	MAX. 264 Min. 198	0.3	15	0.040	0.2	16	24
FXAQ25MA					0.4	15	0.040	0.3	22	27
FXAQ32MA					0.4	15	0.040	0.3	27	32
FXAQ40MA					0.4	15	0.043	0.3	20	20
FXAQ50MA					0.4	15	0.043	0.3	27	32
FXAQ63MA					0.6	15	0.043	0.5	50	60

Symbols:

MCA : Min. Circuit Amps (A)
MFA : Max. Fuse Amps (See note 5)
kW : Fan Motor Rated Output(kW)
FLA : Full Load Amps(A)
IFM : Indoor Fan Motor

Note:

1. Voltage range
   Units are suitable for use on electrical systems where voltage supplied to unit terminals is not below or above listed range limits.
2. Maximum allowable voltage unbalance between phases is 2%.
3. MCA/MFA
   MCA = 1.25 X FLA
   MFA ≦ 4 X FLA
   (Next lower standard fuse rating. Min.15A)
4. Select wire size based on the MCA.
5. Instead of fuse, use Circuit Breaker.

C : 4D034907E

7. Capacity Tables

7.1 Cooling Capacity

FXAQ-MA [50Hz]

Cooling capacity

Unit Size	Outdoor air temp. °CDB	Indoor air temp. 14.0°CWB 20°CDB TC	SC	16.0°CWB 23°CDB TC	SC	18.0°CWB 26°CDB TC	SC	19.0°CWB 27°CDB TC	SC	20.0°CWB 28°CDB TC	SC	22.0°CWB 30°CDB TC	SC	24.0°CWB 32°CDB TC	SC
20	10.0	1.5	1.5	1.8	1.8	2.1	1.9	2.2	1.9	2.3	1.9	2.6	2.0	2.9	1.9
	12.0	1.5	1.5	1.8	1.8	2.1	1.9	2.2	1.9	2.3	1.9	2.6	2.0	2.9	1.9
	14.0	1.5	1.5	1.8	1.8	2.1	1.9	2.2	1.9	2.3	1.9	2.6	2.0	2.8	1.9
	16.0	1.5	1.5	1.8	1.8	2.1	1.9	2.2	1.9	2.3	1.9	2.6	2.0	2.8	1.9
	18.0	1.5	1.5	1.8	1.8	2.1	1.9	2.2	1.9	2.3	1.9	2.6	2.0	2.7	1.9
	20.0	1.5	1.5	1.8	1.8	2.1	1.9	2.2	1.9	2.3	1.9	2.6	2.0	2.7	1.9
	21.0	1.5	1.5	1.8	1.8	2.1	1.9	2.2	1.9	2.3	1.9	2.6	2.0	2.7	1.9
	23.0	1.5	1.5	1.8	1.8	2.1	1.9	2.2	1.9	2.3	1.9	2.6	1.9	2.6	1.9
	25.0	1.5	1.5	1.8	1.8	2.1	1.9	2.2	1.9	2.3	1.9	2.6	1.9	2.6	1.9
	27.0	1.5	1.5	1.8	1.8	2.1	1.9	2.2	1.9	2.3	1.9	2.5	1.9	2.6	1.8
	29.0	1.5	1.5	1.8	1.8	2.1	1.9	2.2	1.9	2.3	1.9	2.5	1.9	2.5	1.8
	31.0	1.5	1.5	1.8	1.8	2.1	1.9	2.2	1.9	2.3	1.9	2.4	1.9	2.5	1.8
	33.0	1.5	1.5	1.8	1.8	2.1	1.9	2.2	1.9	2.3	1.9	2.4	1.9	2.5	1.8
	35.0	1.5	1.5	1.8	1.8	2.1	1.9	2.2	1.9	2.3	1.9	2.4	1.9	2.4	1.8
	37.0	1.5	1.5	1.8	1.8	2.1	1.9	2.2	1.9	2.3	1.9	2.3	1.8	2.4	1.7
	39.0	1.5	1.5	1.8	1.8	2.1	1.9	2.2	1.9	2.2	1.9	2.3	1.8	2.3	1.7
25	10.0	1.9	1.8	2.3	2.0	2.6	2.2	2.8	2.2	3.0	2.2	3.4	2.3	3.7	2.3
	12.0	1.9	1.8	2.3	2.0	2.6	2.2	2.8	2.2	3.0	2.2	3.4	2.3	3.6	2.2
	14.0	1.9	1.8	2.3	2.0	2.6	2.2	2.8	2.2	3.0	2.2	3.4	2.3	3.6	2.3
	16.0	1.9	1.8	2.3	2.0	2.6	2.2	2.8	2.2	3.0	2.2	3.4	2.3	3.5	2.2
	18.0	1.9	1.8	2.3	2.0	2.6	2.2	2.8	2.2	3.0	2.2	3.4	2.3	3.5	2.2
	20.0	1.9	1.8	2.3	2.0	2.6	2.2	2.8	2.2	3.0	2.2	3.4	2.3	3.4	2.2
	21.0	1.9	1.8	2.3	2.0	2.6	2.2	2.8	2.2	3.0	2.2	3.4	2.3	3.4	2.2
	23.0	1.9	1.8	2.3	2.0	2.6	2.2	2.8	2.2	3.0	2.2	3.3	2.3	3.4	2.2
	25.0	1.9	1.8	2.3	2.0	2.6	2.2	2.8	2.2	3.0	2.2	3.3	2.2	3.3	2.2
	27.0	1.9	1.8	2.3	2.0	2.6	2.2	2.8	2.2	3.0	2.2	3.2	2.2	3.3	2.1
	29.0	1.9	1.8	2.3	2.0	2.6	2.2	2.8	2.2	3.0	2.2	3.2	2.2	3.2	2.1
	31.0	1.9	1.8	2.3	2.0	2.6	2.2	2.8	2.2	3.0	2.2	3.1	2.2	3.2	2.1
	33.0	1.9	1.8	2.3	2.0	2.6	2.2	2.8	2.2	3.0	2.2	3.1	2.2	3.1	2.1
	35.0	1.9	1.8	2.3	2.0	2.6	2.2	2.8	2.2	3.0	2.2	3.0	2.2	3.1	2.1
	37.0	1.9	1.8	2.3	2.0	2.6	2.2	2.8	2.2	2.9	2.2	3.0	2.1	3.0	2.0
	39.0	1.9	1.8	2.3	2.0	2.6	2.2	2.8	2.2	2.9	2.2	2.9	2.1	3.0	2.0
32	10.0	2.4	2.2	2.9	2.4	3.4	2.6	3.6	2.7	3.8	2.7	4.3	2.8	4.7	2.8
	12.0	2.4	2.2	2.9	2.4	3.4	2.6	3.6	2.7	3.8	2.7	4.3	2.8	4.7	2.8
	14.0	2.4	2.2	2.9	2.4	3.4	2.6	3.6	2.7	3.8	2.7	4.3	2.8	4.6	2.8
	16.0	2.4	2.2	2.9	2.4	3.4	2.6	3.6	2.7	3.8	2.7	4.3	2.8	4.6	2.8
	18.0	2.4	2.2	2.9	2.4	3.4	2.6	3.6	2.7	3.8	2.7	4.3	2.8	4.5	2.7
	20.0	2.4	2.2	2.9	2.4	3.4	2.6	3.6	2.7	3.8	2.7	4.3	2.8	4.4	2.7
	21.0	2.4	2.2	2.9	2.4	3.4	2.6	3.6	2.7	3.8	2.7	4.3	2.8	4.4	2.7
	23.0	2.4	2.2	2.9	2.4	3.4	2.6	3.6	2.7	3.8	2.7	4.2	2.8	4.3	2.7
	25.0	2.4	2.2	2.9	2.4	3.4	2.6	3.6	2.7	3.8	2.7	4.2	2.8	4.3	2.6
	27.0	2.4	2.2	2.9	2.4	3.4	2.6	3.6	2.7	3.8	2.7	4.1	2.7	4.2	2.6
	29.0	2.4	2.2	2.9	2.4	3.4	2.6	3.6	2.7	3.8	2.7	4.1	2.7	4.2	2.6
	31.0	2.4	2.2	2.9	2.4	3.4	2.6	3.6	2.7	3.8	2.7	4.0	2.7	4.1	2.6
	33.0	2.4	2.2	2.9	2.4	3.4	2.6	3.6	2.7	3.8	2.7	3.9	2.6	4.0	2.5
	35.0	2.4	2.2	2.9	2.4	3.4	2.6	3.6	2.7	3.8	2.7	3.9	2.6	4.0	2.5
	37.0	2.4	2.2	2.9	2.4	3.4	2.6	3.6	2.7	3.7	2.6	3.8	2.6	3.9	2.5
	39.0	2.4	2.2	2.9	2.4	3.4	2.6	3.6	2.7	3.7	2.6	3.8	2.6	3.8	2.5

Cooling capacity

Unit Size	Outdoor air temp. °CDB	Indoor air temp. 14.0°CWB 20°CDB TC	SC	16.0°CWB 23°CDB TC	SC	18.0°CWB 26°CDB TC	SC	19.0°CWB 27°CDB TC	SC	20.0°CWB 28°CDB TC	SC	22.0°CWB 30°CDB TC	SC	24.0°CWB 32°CDB TC	SC
40	10.0	3.0	2.9	3.6	3.3	4.2	3.7	4.5	3.5	4.8	3.6	5.4	3.6	5.9	3.6
	12.0	3.0	2.9	3.6	3.3	4.2	3.7	4.5	3.5	4.8	3.6	5.4	3.6	5.8	3.5
	14.0	3.0	2.9	3.6	3.3	4.2	3.7	4.5	3.5	4.8	3.6	5.4	3.6	5.8	3.5
	16.0	3.0	2.9	3.6	3.3	4.2	3.7	4.5	3.5	4.8	3.6	5.4	3.6	5.7	3.5
	18.0	3.0	2.9	3.6	3.3	4.2	3.7	4.5	3.5	4.8	3.6	5.4	3.6	5.6	3.4
	20.0	3.0	2.9	3.6	3.3	4.2	3.7	4.5	3.5	4.8	3.6	5.4	3.6	5.5	3.4
	21.0	3.0	2.9	3.6	3.3	4.2	3.7	4.5	3.5	4.8	3.6	5.4	3.6	5.5	3.4
	23.0	3.0	2.9	3.6	3.3	4.2	3.7	4.5	3.5	4.8	3.6	5.3	3.6	5.4	3.3
	25.0	3.0	2.9	3.6	3.3	4.2	3.7	4.5	3.5	4.8	3.6	5.2	3.6	5.3	3.3
	27.0	3.0	2.9	3.6	3.3	4.2	3.7	4.5	3.5	4.8	3.6	5.2	3.5	5.3	3.3
	29.0	3.0	2.9	3.6	3.3	4.2	3.7	4.5	3.5	4.8	3.6	5.1	3.5	5.2	3.2
	31.0	3.0	2.9	3.6	3.3	4.2	3.7	4.5	3.5	4.8	3.6	5.0	3.4	5.1	3.2
	33.0	3.0	2.9	3.6	3.3	4.2	3.7	4.5	3.5	4.8	3.6	4.9	3.4	5.0	3.1
	35.0	3.0	2.9	3.6	3.3	4.2	3.7	4.5	3.5	4.7	3.6	4.9	3.4	5.0	3.1
	37.0	3.0	2.9	3.6	3.3	4.2	3.7	4.5	3.5	4.7	3.5	4.8	3.3	4.9	3.1
	39.0	3.0	2.9	3.6	3.3	4.2	3.7	4.5	3.5	4.6	3.5	4.7	3.3	4.8	3.0
50	10.0	3.8	3.2	4.5	3.7	5.2	4.1	5.6	4.2	6.0	4.3	6.7	4.4	7.4	4.4
	12.0	3.8	3.2	4.5	3.7	5.2	4.1	5.6	4.2	6.0	4.3	6.7	4.4	7.3	4.3
	14.0	3.8	3.2	4.5	3.7	5.2	4.1	5.6	4.2	6.0	4.3	6.7	4.4	7.2	4.3
	16.0	3.8	3.2	4.5	3.7	5.2	4.1	5.6	4.2	6.0	4.3	6.7	4.4	7.1	4.3
	18.0	3.8	3.2	4.5	3.7	5.2	4.1	5.6	4.2	6.0	4.3	6.7	4.4	7.0	4.2
	20.0	3.8	3.2	4.5	3.7	5.2	4.1	5.6	4.2	6.0	4.3	6.7	4.4	6.9	4.2
	21.0	3.8	3.2	4.5	3.7	5.2	4.1	5.6	4.2	6.0	4.3	6.7	4.4	6.8	4.2
	23.0	3.8	3.2	4.5	3.7	5.2	4.1	5.6	4.2	6.0	4.3	6.6	4.4	6.7	4.1
	25.0	3.8	3.2	4.5	3.7	5.2	4.1	5.6	4.2	6.0	4.3	6.5	4.3	6.6	4.1
	27.0	3.8	3.2	4.5	3.7	5.2	4.1	5.6	4.2	6.0	4.3	6.4	4.3	6.6	4.0
	29.0	3.8	3.2	4.5	3.7	5.2	4.1	5.6	4.2	6.0	4.3	6.3	4.2	6.5	4.0
	31.0	3.8	3.2	4.5	3.7	5.2	4.1	5.6	4.2	6.0	4.3	6.2	4.2	6.4	3.9
	33.0	3.8	3.2	4.5	3.7	5.2	4.1	5.6	4.2	6.0	4.3	6.1	4.2	6.3	3.9
	35.0	3.8	3.2	4.5	3.7	5.2	4.1	5.6	4.2	5.9	4.3	6.0	4.1	6.2	3.8
	37.0	3.8	3.2	4.5	3.7	5.2	4.1	5.6	4.2	5.8	4.3	5.9	4.1	6.1	3.8
	39.0	3.8	3.2	4.5	3.7	5.2	4.1	5.6	4.2	5.7	4.2	5.8	4.0	6.0	3.8
63	10.0	4.8	4.1	5.7	4.6	6.6	5.1	7.1	5.3	7.6	5.4	8.5	5.6	9.3	5.3
	12.0	4.8	4.1	5.7	4.6	6.6	5.1	7.1	5.3	7.6	5.4	8.5	5.6	9.2	5.3
	14.0	4.8	4.1	5.7	4.6	6.6	5.1	7.1	5.3	7.6	5.4	8.5	5.6	9.1	5.2
	16.0	4.8	4.1	5.7	4.6	6.6	5.1	7.1	5.3	7.6	5.4	8.5	5.6	9.0	5.2
	18.0	4.8	4.1	5.7	4.6	6.6	5.1	7.1	5.3	7.6	5.4	8.5	5.6	8.8	5.2
	20.0	4.8	4.1	5.7	4.6	6.6	5.1	7.1	5.3	7.6	5.4	8.5	5.6	8.7	5.1
	21.0	4.8	4.1	5.7	4.6	6.6	5.1	7.1	5.3	7.6	5.4	8.5	5.6	8.7	5.1
	23.0	4.8	4.1	5.7	4.6	6.6	5.1	7.1	5.3	7.6	5.4	8.4	5.5	8.5	5.0
	25.0	4.8	4.1	5.7	4.6	6.6	5.1	7.1	5.3	7.6	5.4	8.3	5.5	8.4	5.0
	27.0	4.8	4.1	5.7	4.6	6.6	5.1	7.1	5.3	7.6	5.4	8.1	5.4	8.3	4.9
	29.0	4.8	4.1	5.7	4.6	6.6	5.1	7.1	5.3	7.6	5.4	8.0	5.4	8.2	4.9
	31.0	4.8	4.1	5.7	4.6	6.6	5.1	7.1	5.3	7.6	5.4	7.9	5.3	8.1	4.8
	33.0	4.8	4.1	5.7	4.6	6.6	5.1	7.1	5.3	7.6	5.4	7.8	5.2	7.9	4.8
	35.0	4.8	4.1	5.7	4.6	6.6	5.1	7.1	5.3	7.5	5.4	7.7	5.2	7.8	4.7
	37.0	4.8	4.1	5.7	4.6	6.6	5.1	7.1	5.3	7.4	5.3	7.5	5.1	7.7	4.7
	39.0	4.8	4.1	5.7	4.6	6.6	5.1	7.1	5.3	7.2	5.3	7.4	5.1	7.6	4.6

TC Total capacity ; kW
SC Sensible capacity ; kW

Refer to Outdoor Unit Capacity Tables : on page 411~, 470~, for the actual performance data of each indoor and outdoor unit combination.

8. Sound Levels

Overall

■ **Wall Mounted Type**

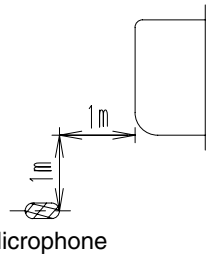

4D037087D

Note:

1. The operating conditions are assumed to be standard (JIS conditions).
2. These operating values were obtained in a dead room (conversion values).
   Sound level will vary depending on a range of factors such as the construction (acoustic absorption coefficient) of the particular room in which the equipments installed.

dBA

Model	220~240V, 50Hz	
	H	L
FXAQ20MA	35	29
FXAQ25MA	36	29
FXAQ32MA	37	29
FXAQ40MA	39	34
FXAQ50MA	42	36
FXAQ63MA	46	39

Octave Band Level

○——○ 220~240V 50Hz

FXAQ20MAVE

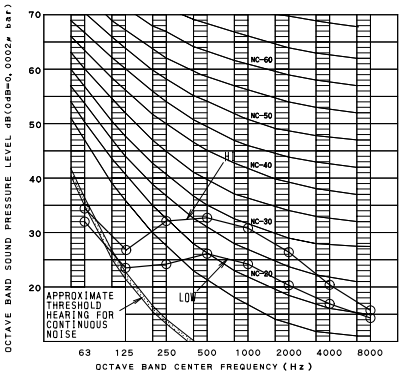

4D037087D

FXAQ25MAVE

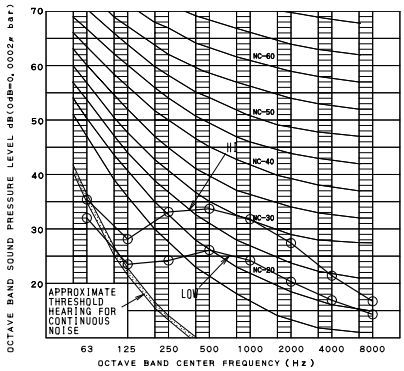

4D037088D

FXAQ32MAVE

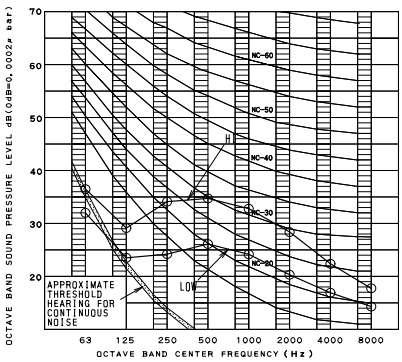

4D037089D

FXAQ40MAVE

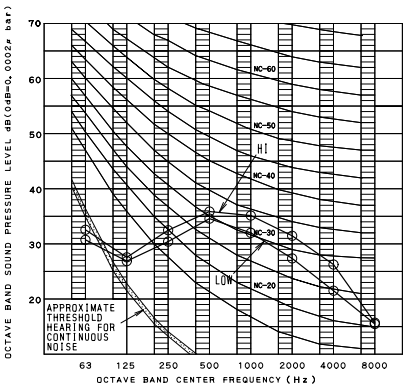

4D038513A

FXAQ50MAVE

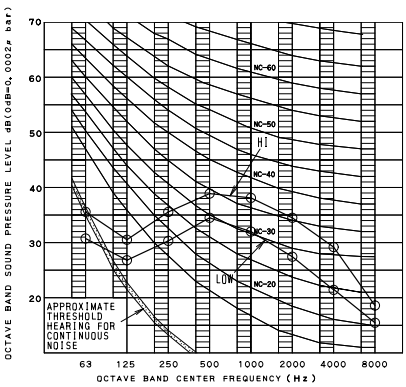

4D038514A

FXAQ63MAVE

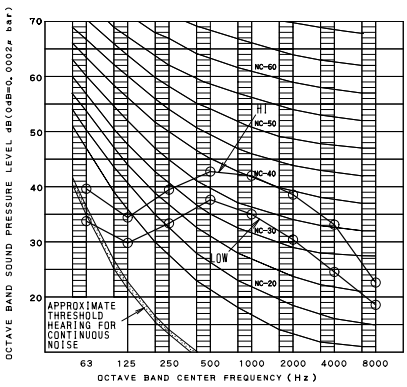

4D038515A

9. Installation

Installation Example

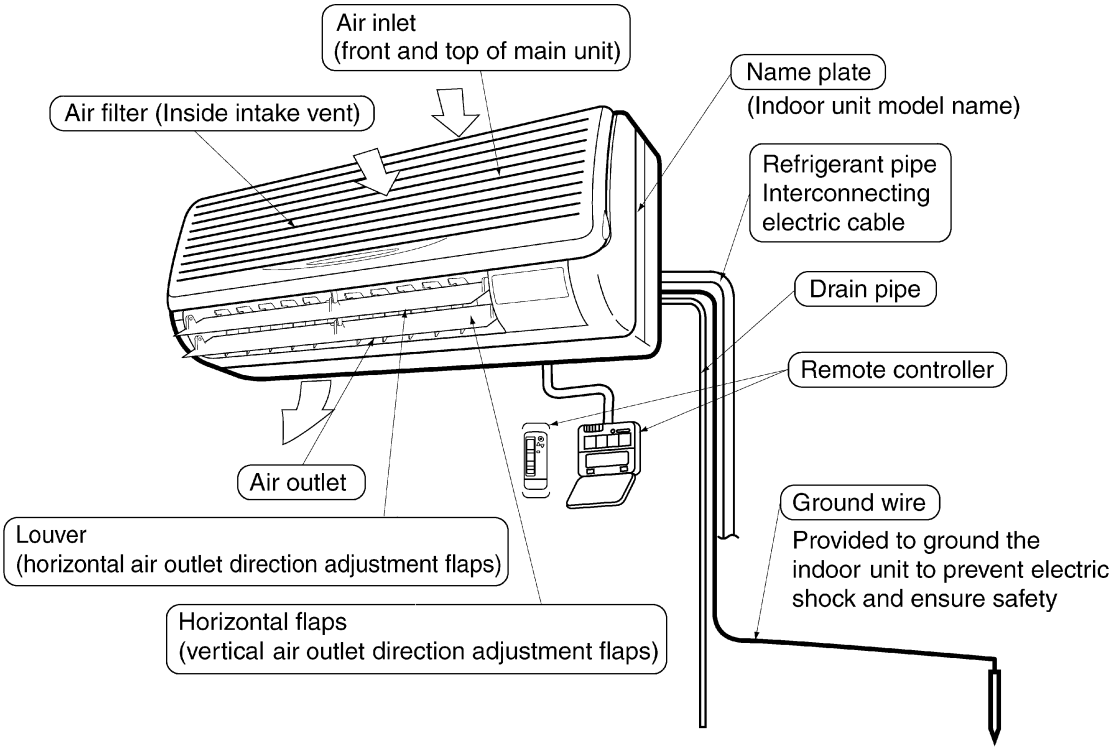

C : 3PN02401-8Q

Recommended mounting-plate retention spots and Dimensions
20 · 25 · 32 class

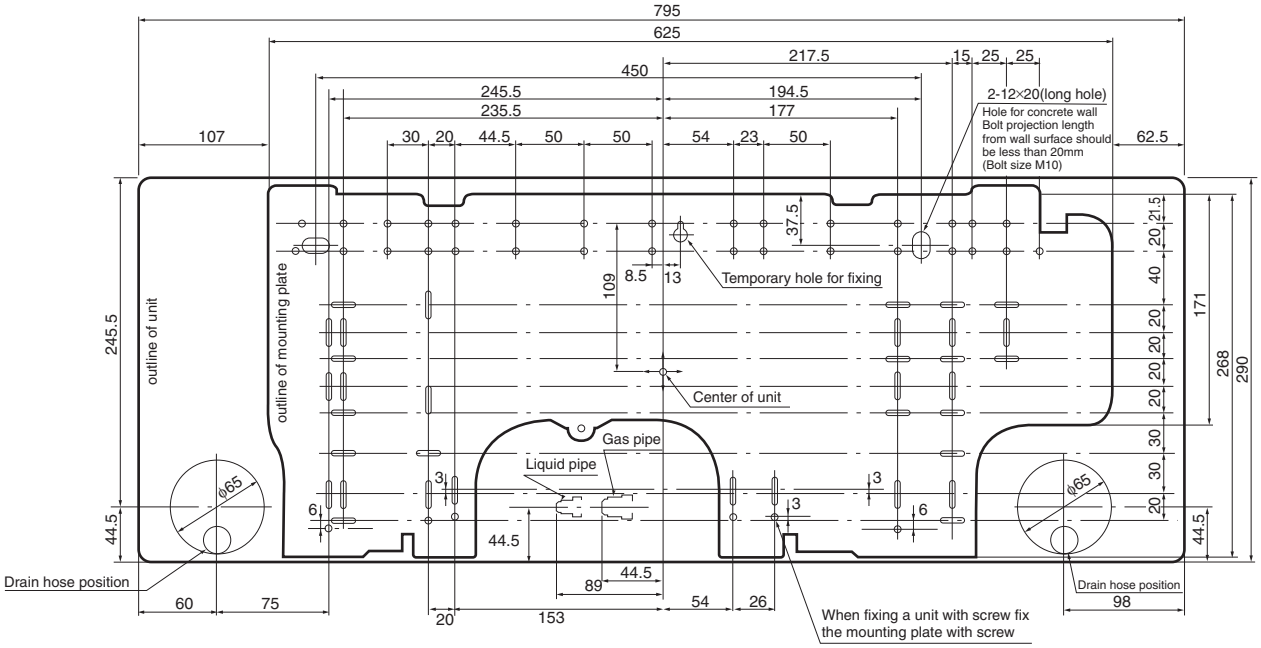

C : 1P079690-1B

40 · 50 · 63 class

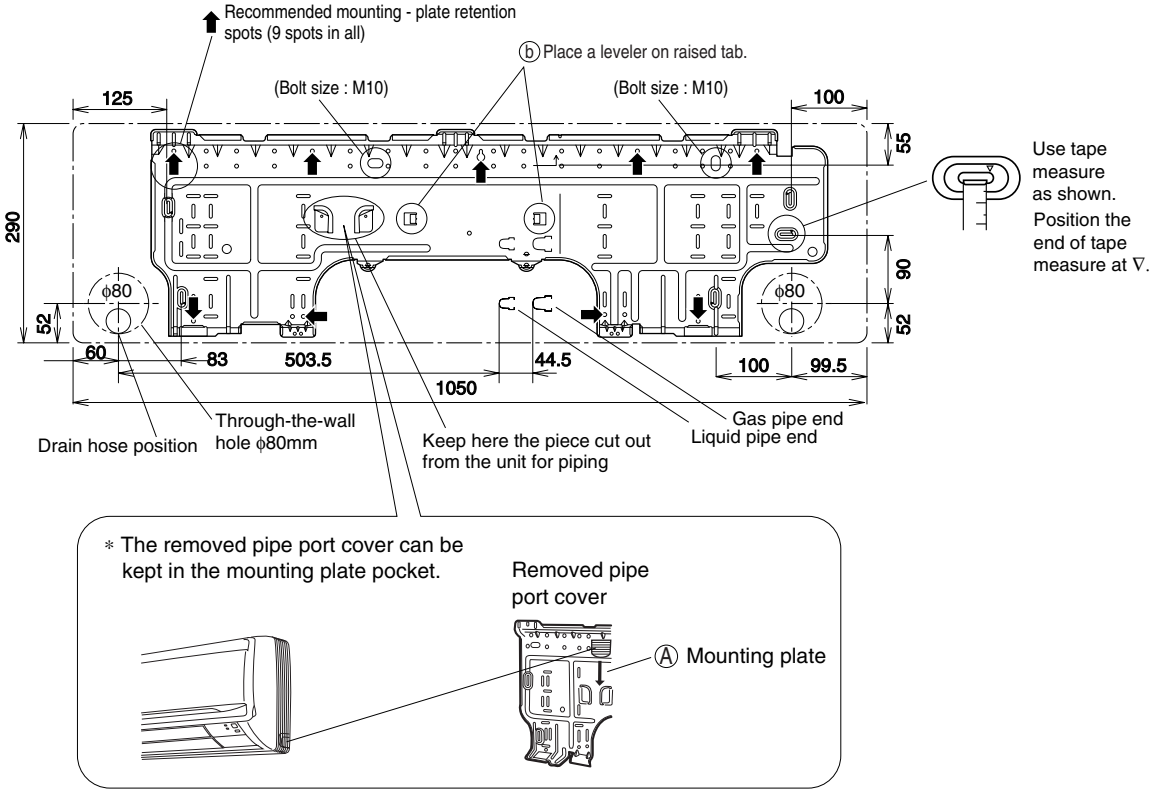

C : 2P095003-1C

Service Space

(1) Select an installation site where the following conditions are fulfilled and that meets with your customer's approval.

- In the upper space (including the back of the ceiling) of the indoor unit where there is no possible dripping of water from the refrigerant pipe, drain pipe, water pipe, etc.
- Where the wall is strong enough to bear the indoor unit weight.
- Where sufficient clearance for installation and maintenance can be ensured.
  (Refer to Fig. 1 and Fig. 2)
- Where optimum air distribution can be ensured.
- Where nothing blocks the air passage.
- Where condensate can be properly drained.
- Where the wall is not significantly tilted.
- Where not exposed to combustible gases.
- Where pipe between indoor and outdoor units is possible within the allowable limit.
  (Refer to the installation manual of the outdoor unit.)
- Install the indoor and outdoor units, power cable and transmission wiring, at least 1 m from TVs and radios, to prevent distorted pictures and static. (Depending on the type and source of the electrical waves, static may be heard even when more than 1 m away.)
- Install the indoor unit no less than 2.5 m above the floor. Where unavoidably lower, take what measures are necessary to keep hands out of the air inlet.
- Where the cool (warm) air reaches all across the room.

[Space required for installation (mm)]

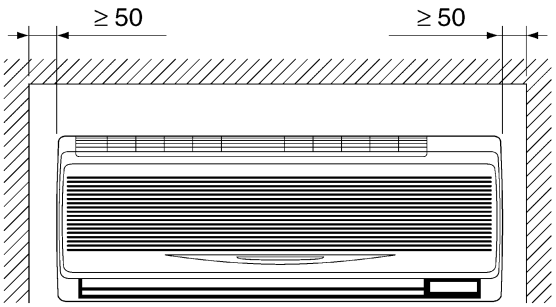

Fig. 1

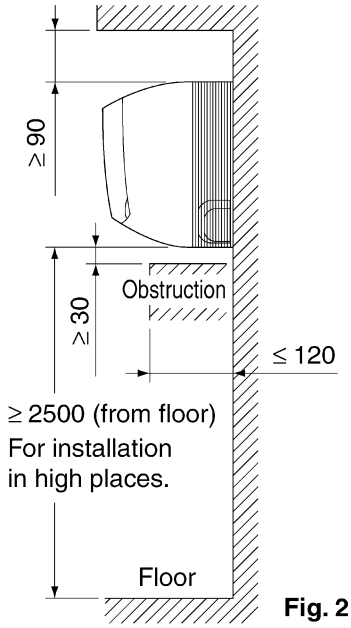

Fig. 2

(2) Consider whether the place where the unit will be installed can support the full weight of the unit, and reinforce it with boards and beams, etc. if needed before proceeding with the installation. Also, reinforce the place to prevent vibration and noise before installing.
(The installation pitch can be found on the paper pattern for installation (3), so refer to it when considering the necessity for reinforcing the location.)

(3) The indoor unit may not be directly installed on the wall. Use the attached installation panel (1) before installing the unit.

C : 3P156215-6D

Installation

(1) Open the piping through-hole.

- The refrigerant pipe and drain pipe can be passed out in one of 6 directions: left, bottom-left, back-left, right, bottom-right, and back-right. **(Refer to Fig. 3)**
- Using the paper pattern for installation (3), choose where to pass the piping out and open a through-hole (ϕ80) in the wall.
  Open the hole so that there is a downward slope for the drain piping. (See "DRAIN PIPING WORK")

(2) Remove the installation panel (1) from the unit and attach to the wall.
(The installation panel is temporarily attached to the unit with screw. (In case of 20-32 type))
(Refer to Fig. 3)

(a) Check the location for the hole using the included paper pattern for installation (3).
- Choose a location so that there is at least a 90 mm gap between the ceiling and the main unit.

(b) Temporarily attach the installation panel (1) at the temporary-securing position on the paper pattern for installation (3) and use a level to make sure the drain hose is either level or tilted slightly downward.

(c) Secure the installation panel (1) to the wall using either screws or bolts.
- If using the attachment screws for the installation panel (2), attach using at least 4 screws on either side (for a total of 8 screws (20-32 type), 9 screws (40-63 type)) of the recommended installation cleat position on the included paper pattern for installation (3).
- If using bolts, attach using a M8 - M10 bolt (for a total of 2 bolts) on either side.
- If dealing with concrete, use commercially available foundation bolts (M8 - M10).

(3) If using the left, bottom-left, right, or bottom-right positions for the piping, cut out the through-hole for the piping in the front grill. (Refer to Fig. 4)

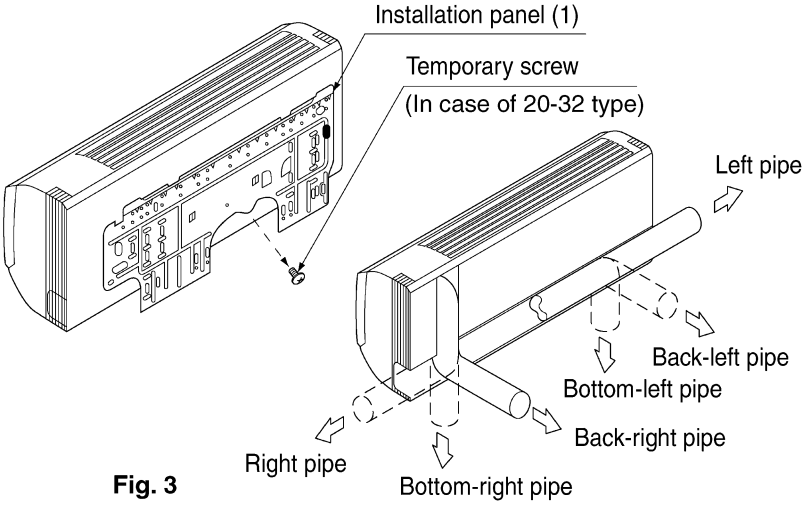

Fig. 3

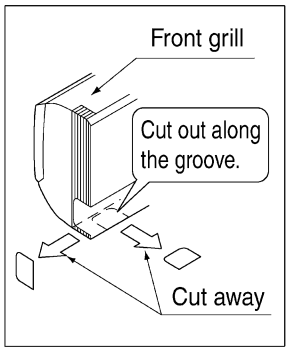

Fig. 4

(4) Remove the front panel and the service lid. (Refer to Fig. 5)

< How to remove the front panel and service lid >

(1) Open the front panel to the point where it stops.

(2) Push the axes on either side of the front panel towards the center of the main unit and remove. (You can also remove it by sliding the front panel either to the left or right and pulling it forward.)

(3) Remove the screw from the service lid and pull the handle forward.

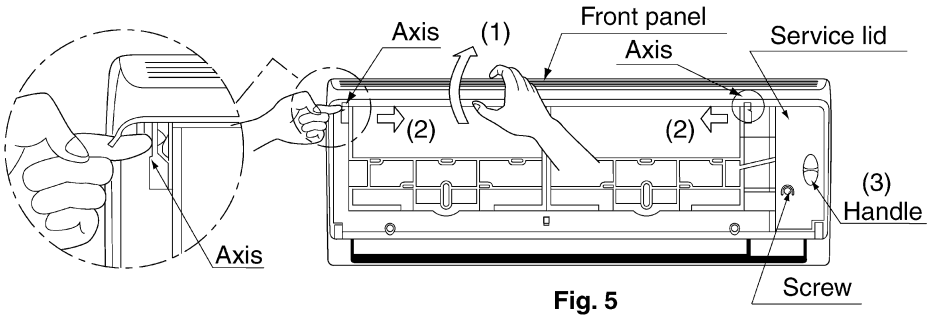

Fig. 5

C : 3P156215-6D

(5) Point the pipe in the direction it will be passed out.

For right, bottom-right, and back-right piping (Refer to Fig. 6)

- Wrap the drain hose and the refrigerant piping together with the insulating tape (4) so that the drain hose is below the refrigerant piping.

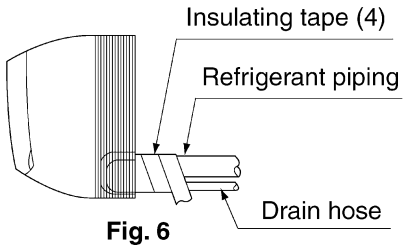

Fig. 6

For left, bottom-left, and left-back piping

- Remove the front grill. **(Refer to Fig. 7)**

< How to remove the front grill >

Remove the front grill as described below when securing the indoor unit with screws or when attaching Optional Accessories (wireless remote controller, adapter PC board, etc.).

(1) Remove the front panel.

(2) Remove the screws (2 places in case of FXAQ20,25,32 type/3 places in case of FXAQ40,50,63 type) securing the front grill.

(3) Remove the tabs (3 places) securing the front grill by pushing them in the direction of the arrows.

(4) Making sure not to catch the horizontal flaps, remove the front grill by pulling in the direction of the arrow.

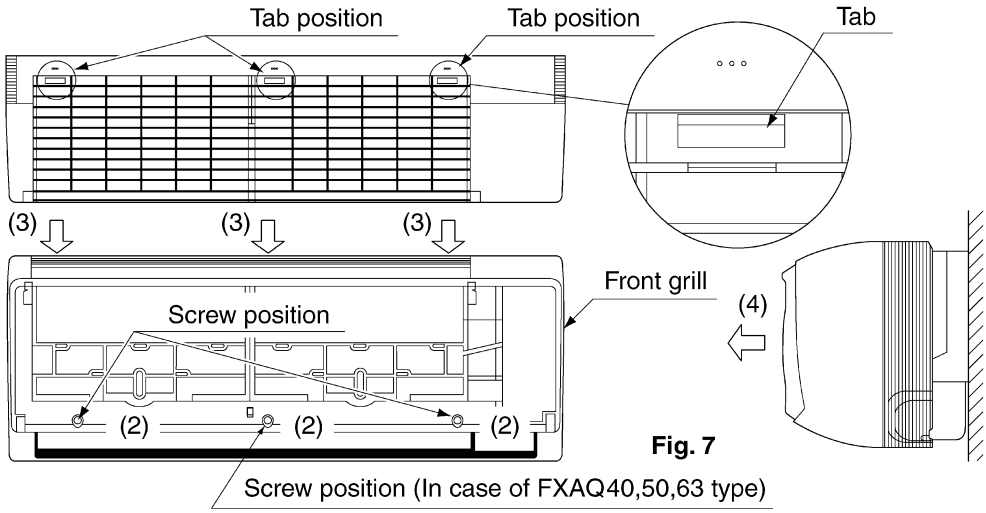

Fig. 7

- Remove the drain plug, the insulation tubing, and the drain hose from the drain pan and replace. **(Refer to Fig. 8)**
- Connect the local refrigerant piping ahead of time, matching it to the liquid pipe and gas pipe marks engraved on the installation panel (1).

< Replacing the drain hose and drain plug >

(1) Remove the drain plug and insulation tubing.
(2) Remove the drain hose and replace onto the left side.
(3) Replace the drain plug and the insulation tubing onto the right side.

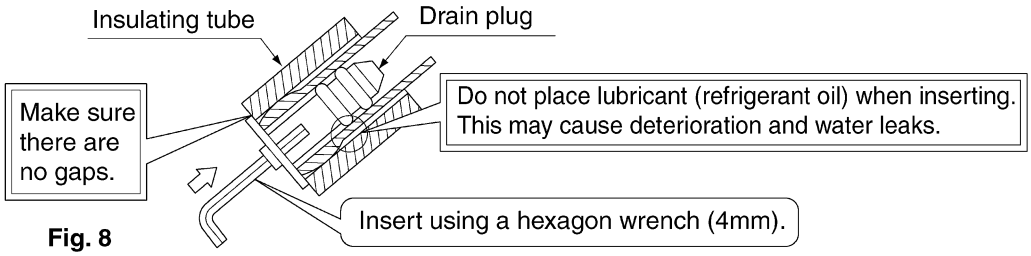

Fig. 8

C : 3P156215-6D

(6) Hook the indoor unit onto the installation panel. (Refer to Fig. 9)

- Placing buffering material between the wall and the indoor unit at this time will make work easier.

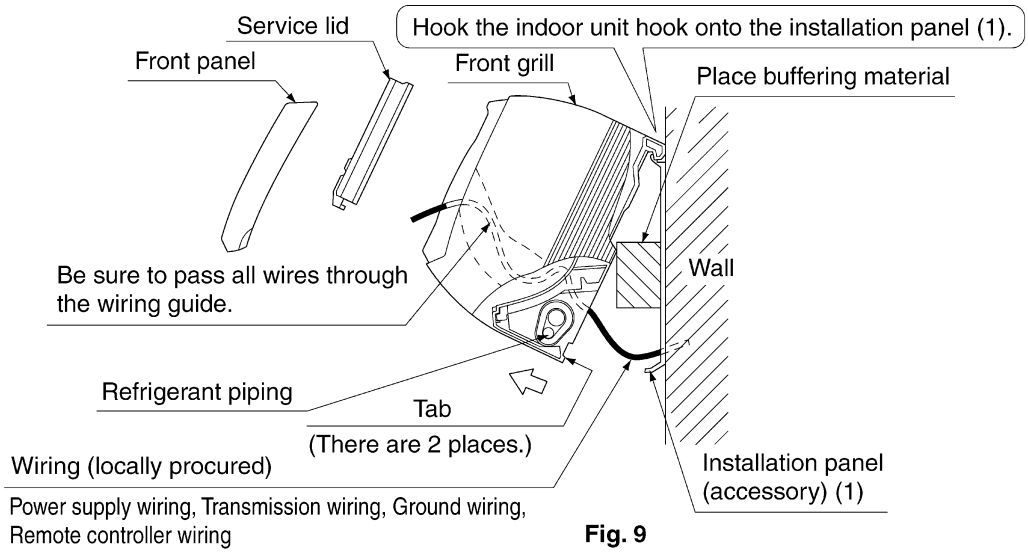

Fig. 9

For right, bottom-right, and back-right piping

- Pass the drain hose and the refrigerant piping to the wall.

(7) Pass power supply wiring, transmission wiring, ground wiring, and remote controller wiring through the wiring guide in through the back of the indoor unit and to the front.

(8) Connect the piping. (See Fig. 10)

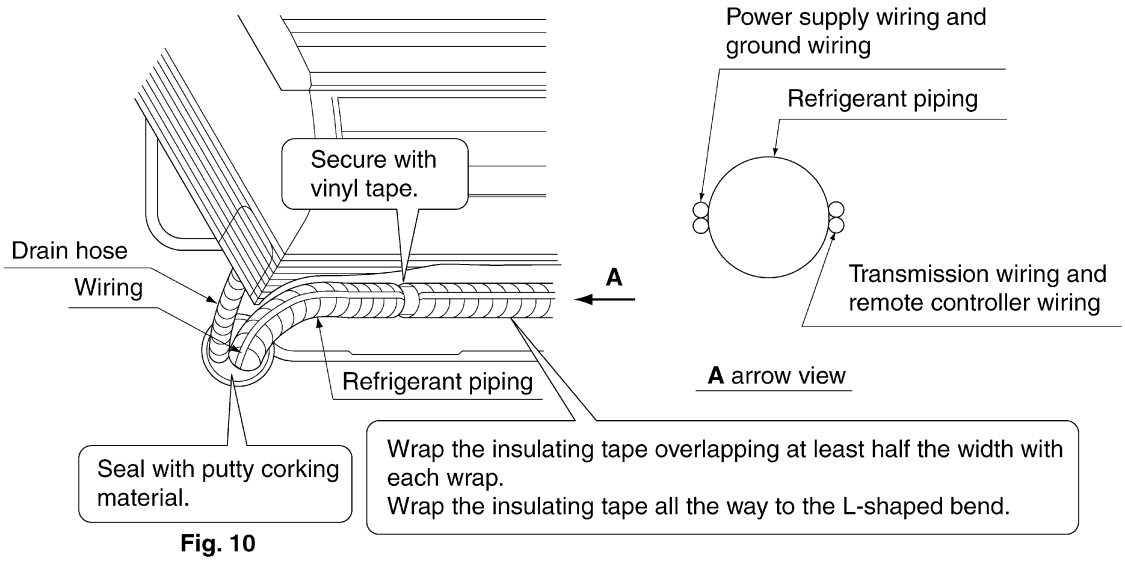

Fig. 10

- To avoid the influence of noise from the power supply line on the transmission wiring and the remote controller wiring, these wirings must be kept as far as possible from the power/ground wirings. As shown in the figure, keep the power supply wiring and the ground wiring together. Keep the transmission and remote controller wirings together and route them maintaining a good distance from the power supply/ground wirings (that is, on the other side of the power supply/ground wirings). Then, fix them securely on the refrigerant pipe.
- Seal the piping through-hole with putty corking material.

(9) Push on both bottom edges of the indoor unit using both hands and hook the tab on the back of the indoor unit onto the installation panel (1). (Refer to Fig. 9)

- At this time remove the buffering material placed in step (6).

C : 3P156215-6D

- Make sure power supply wiring, transmission wiring, ground wiring and remote controller wiring are not caught inside the indoor unit.

■ When screwing in the indoor unit

- Remove the front grill. **(Refer to Fig. 7)**
- Secure the indoor unit to the installation panel (1) with the securing screws (6). **(Refer to Fig. 11)**

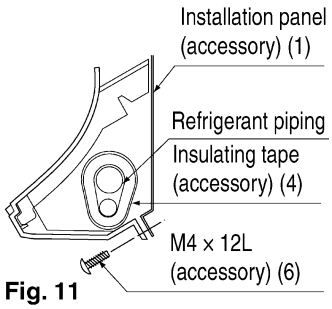

Fig. 11

C : 3P156215-6D

9

Drain Piping Work

(1) Install the drain piping. (Refer to Fig. 16)

- The drain pipe should be short with a downward slope and should prevent air pockets from forming.
- Watch out for the points in the figure 16 when performing drain work.

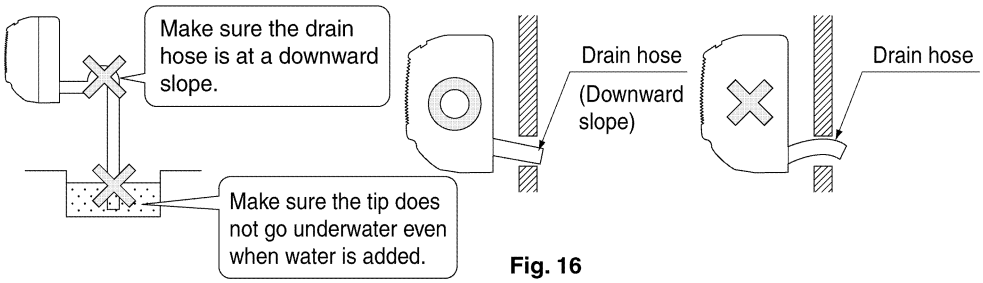

Fig. 16

- When extending the drain hose, use a commercially available drain extension hose, and be sure to insulate the extended section of the drain hose which is indoors. **(Refer to Fig. 17)**

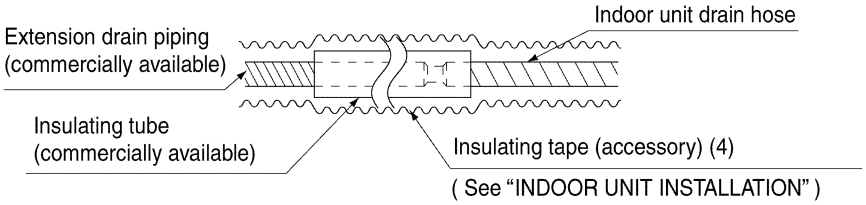

Fig. 17

- Make sure the diameter of the piping is the same as the piping (hard vinyl chloride, nominal diameter 13mm) or bigger.
- When directly connecting a hard vinyl chloride pipe joint (nominal diameter 13mm) to the drain hose connected to the indoor unit (i.e. for embedded piping, etc.), use a commercially available hard vinyl chloride pipe joint (nominal diameter 13mm). **(Refer to Fig. 18)**

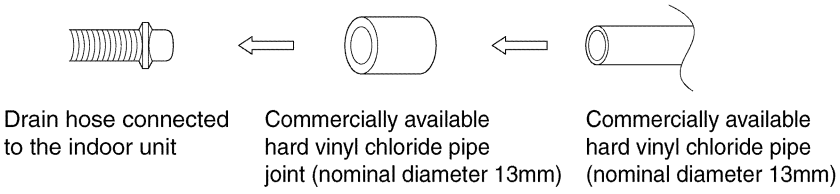

Fig. 18

(2) Make sure the drain works properly.

- After drain work is complete, perform a drain check by opening the front panel, **removing the air filter**, pouring water into the drain pan, and making sure water flows smoothly out of the drain hose. **(Refer to Fig. 19)**

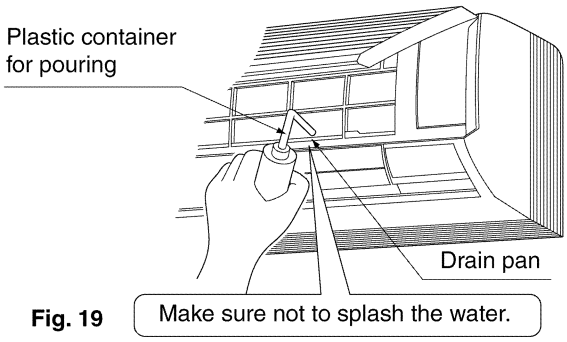

Fig. 19

⚠ CAUTION

Drain piping connections
Do not connect the drain piping directly to sewage pipes that smell of ammonia. The ammonia in the sewage might enter the indoor unit through the drain pipes and corrode the heat exchanger.
Keep in mind that it will become the cause of getting drain pipe blocked if water collects on drain pipe.

C : 3P156215-6D

10. Accessories

Standard Accessories

FXAQ20~63MA

Name	(1) Installation panel	(2) Attachment screws for the installation panel	(3) Paper pattern for installation	(4) Insulating tape	(5) Clamp
Quantity	1 set	8 pcs. → FXA(Q)20,25,32 type 9 pcs. → FXA(Q)40,50,63 type	1 pc.	1 pc.	1 large 3 small
Shape	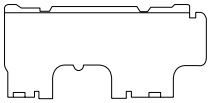	 M4 × 25L	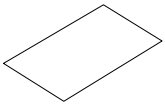	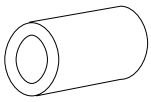	

Name	(6) Securing screws	
Quantity	2 pcs.	(Other) • Operation manual • Installation manual
Shape	 M4 × 12L	

C : 3P156215-6D

9

Optional Accessories (For Unit)

No.	Type / Item	FXAQ20MA	FXAQ25MA	FXAQ32MA	FXAQ40MA	FXAQ50MA	FXAQ63MA
1	Drain pump kit	K-KDU572CVE					

Optional Accessories (For Controls) : Refer to P.561

Drain Pump Kit — K-KDU572CVE

Specification

Main Applicable Models		20·25·32·40·50·63 Class
Drain pump head (mm)	(Note 1)	1,000
Drain up mechanism	Power supply	Single phase 220-240V/ 220V,50/60Hz
	Power consumption	15.6/14.1(W)
	Operating current	0.26/0.26(A)
	Insulation	Class E
Drain inlet connection pipe diameter		VP20 (Note 2)
Drain exit connection pipe diameter		VP20
Safety device		Float switch
Operating noise (dB)		25
Machine weight (Mass)(kg)		3.0

Note 1: Height from bottom of drain pump kit up to the drain pipe.
Note 2: Connect to the VP13 using the soft reducing socket.

Wiring Diagram

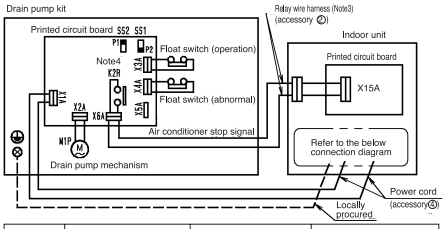

Application model	FAY71LVE FAYP71LV1	FXA20·25·32LVE(C) FXA40·50·63LVE FXAQ20·25·32MVE FXAQ40·50·63MVE	FAQ71BUV1B
Connection diagram	X2M Tes2 ⏚ 1 2 3	X2M ⏚ L N	X2M ⏚ 1 2 3

The earth wire (copper) should be at least 2.0mm² or ϕ1.6mm.
When the relay wire harness is connected, remove the X15A short-circuit connector.

Note1: Don't forget to turn on the power. If it is not turned on, the air conditioner will perform an error stop and operation will not be possible.
Note2: Make sure that slide switch SS1 on the drain pump kit printed circuit board assembly is set to P2 and slide switch SS2 is set to P1.
Note3: The relay wire harness cannot be extended.
Note4: Turning on the power will close the K2R connector, making is a non-volt B connector.

Component Parts

Name	Shape	Quantity	Name	Shape	Quantity	Name	Shape	Quantity
Drain Pump Kit	①	1	Insulation	⑦ 50X300Xt10	1	Rigid polyvinyl chloride pipe (Note3)	⑬ VP13 365	1
Relay wire harness	② (Green) (Red)	1	Clamp	⑧	2	Soft drain pipe	⑭ VP20 200	1
Connecting harness	③ (White)	1	Clamp	⑨	1	Screw Washer	⑮ (White)	1
Power cord	④ (Blue)	1	Soft reducing socket	⑩ VP13	1	Screw	⑯ M5X35	5
Insulation pipe cover	⑤	1	Drain hose	⑪ 150	1	Clamp material	⑰	4
Insulation	⑥ 90X300Xt2	1	Rigid polyvinyl chloride pipe joint	⑫ VP13 57	1	Paper pattern for Installation	⑱	1
						Installation Manual	⑲	1

Note 3: This pipe must be procured locally for the large capacity machine.

External drawing of drain pump kit and Service space

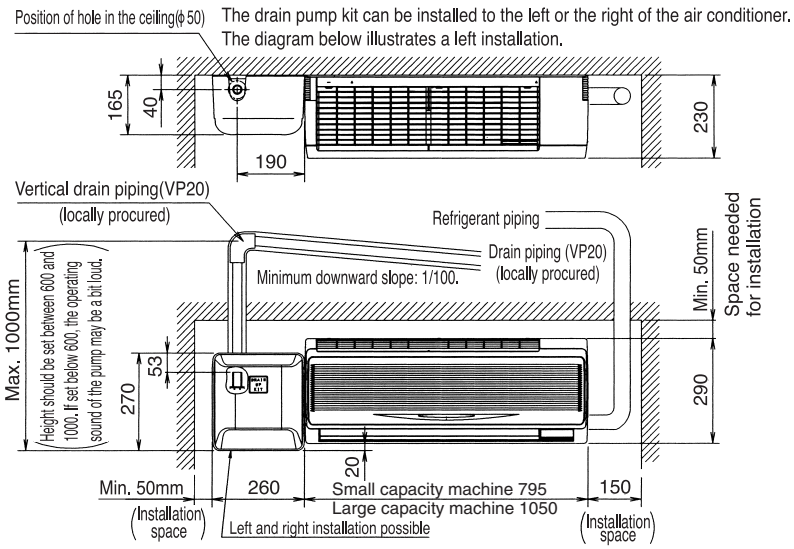

Installation

Caution
- Exit piping parts must be procured locally.
- Be sure to insulate the drain piping.
- Give the horizontal sections on the drain piping a downward slope of at least 1/100 and make sure no air bubbles accumulate.
- Secure long horizontal sections with support clamps to prevent them from shaking.

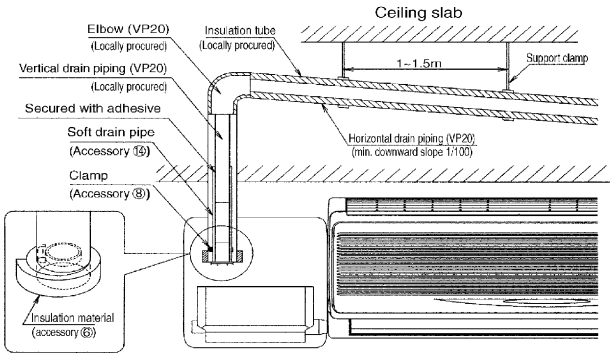

When using centralized piping

- Follow the figure below to make sure there is absolutely no back-up when using centralized piping.

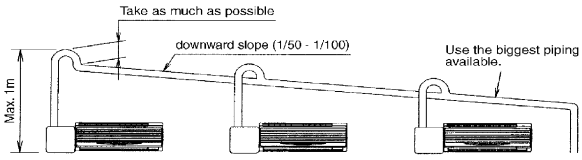

9

FXLQ-MA / FXNQ-MA Floor Standing Type / Concealed Floor Standing Type

1. Features 280
2. Specifications 281
   2.1 FXLQ-MA 281
   2.2 FXNQ-MA 283
3. Dimensions 285
   3.1 FXLQ-MA 285
   3.2 FXNQ-MA 288
4. Piping Diagrams 291
5. Wiring Diagrams 292
6. Electric Characteristics 293
7. Capacity Tables 294
   7.1 Cooling Capacity 294
8. Sound Levels 295
9. Installation 297
10. Accessories 300

1. Features

Efficient for perimeter zone airconditioning.

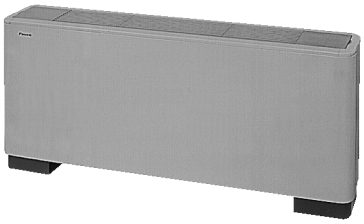

FXLQ-MA

Can be built into pericounter

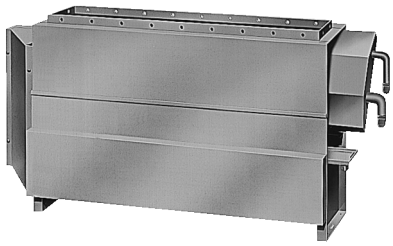

FXNQ-MA

(1) New round-shape adds the gentle feeling to office environment.

- Mild color is applied to the discharge grille and the bottom frame.
- The slimming top plate ensures elegance in dynamics.

(2) Improvement on the installation

- The piping connection work is facilitated drastically.

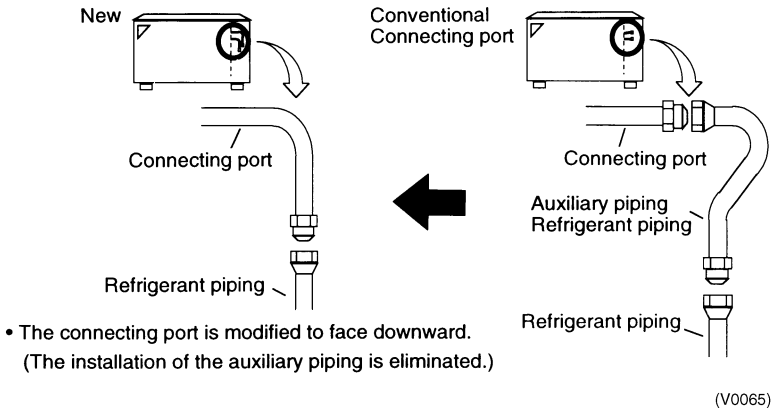

(3) Easy maintenance

When the unit is hung on the wall, it is easy to clean the floor. (Exposed type)

- The maintenance of the discharge grille is improved.
- The interval of filter cleaning is prolonged.

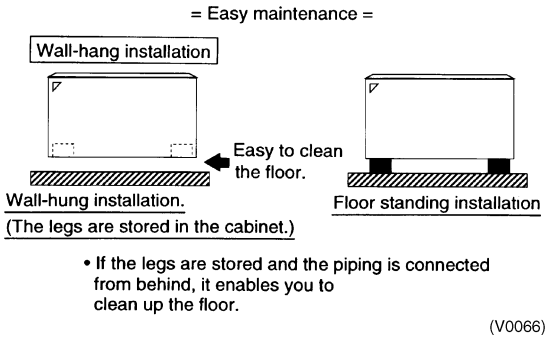

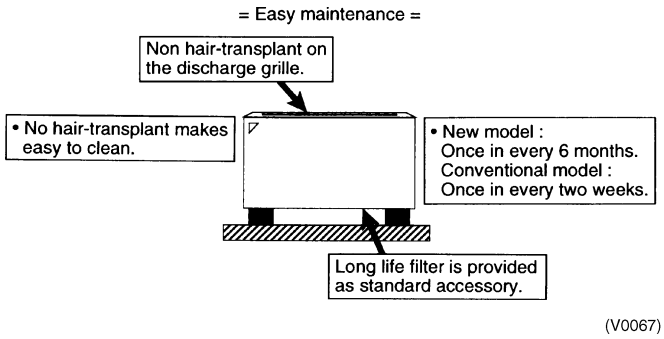

2. Specifications

2.1 FXLQ-MA

Floor Standing Type

Model			FXLQ20MAVE	FXLQ25MAVE	FXLQ32MAVE
∗1 Cooling Capacity (19.5°CWB)		kcal/h	2,000	2,500	3,200
		Btu/h	7,800	9,900	12,600
		kW	2.3	2.9	3.7
∗2 Cooling Capacity (19.0°CWB)		kW	2.2	2.8	3.6
Casing Color			Ivory White (5Y7.5/1)	Ivory White (5Y7.5/1)	Ivory White (5Y7.5/1)
Dimensions: (H×W×D)		mm	600×1,000×222	600×1,000×222	600×1,140×222
Coil (Cross Fin Coil)	Rows×Stages×Fin Pitch	mm	3×14×1.5	3×14×1.5	3×14×1.5
	Face Area	m²	0.159	0.159	0.200
Fan	Model		D14B20	D14B20	2D14B13
	Type		Sirocco Fan	Sirocco Fan	Sirocco Fan
	Motor Output × Number of Units	W	15×1	15×1	25×1
	Air Flow Rate (H/L)	m³/min	7/6	7/6	8/6
		cfm	247/212	247/212	282/212
	Drive		Direct Drive	Direct Drive	Direct Drive
Temperature Control			Microprocessor Thermostat for Cooling and Heating	Microprocessor Thermostat for Cooling and Heating	Microprocessor Thermostat for Cooling and Heating
Sound Absorbing Thermal Insulation Material			Glass Fiber/ Urethane Foam	Glass Fiber/ Urethane Foam	Glass Fiber/ Urethane Foam
Air Filter			Resin Net (with Mold Resistant)	Resin Net (with Mold Resistant)	Resin Net (with Mold Resistant)
Piping Connections	Liquid Pipes	mm	ϕ6.4 (Flare Connection)	ϕ6.4 (Flare Connection)	ϕ6.4 (Flare Connection)
	Gas Pipes	mm	ϕ12.7 (Flare Connection)	ϕ12.7 (Flare Connection)	ϕ12.7 (Flare Connection)
	Drain Pipe	mm	ϕ21 O.D (Vinyl Chloride)	ϕ21 O.D (Vinyl Chloride)	ϕ21 O.D (Vinyl Chloride)
Machine Weight (Mass)		kg	25	25	30
∗4 Sound Level (H/L) (220V)		dBA	35/32	35/32	35/32
Safety Devices			Fuse. Thermal Protector for Fan Motor.	Fuse. Thermal Protector for Fan Motor.	Fuse. Thermal Protector for Fan Motor.
Refrigerant Control			Electronic Expansion Valve	Electronic Expansion Valve	Electronic Expansion Valve
Connectable Outdoor Unit			R-410A P Series	R-410A P Series	R-410A P Series
Standard Accessories			Operation Manual. Installation Manual. Insulation for Fitting. Drain Hose. Clamps. Screws. Washers. Level Adjustment Screw.	Operation Manual. Installation Manual. Insulation for Fitting. Drain Hose. Clamps. Screws. Washers. Level Adjustment Screw.	Operation Manual. Installation Manual. Insulation for Fitting. Drain Hose. Clamps. Screws. Washers. Level Adjustment Screw.
Drawing No.			C : 3D038816A		

Note:

∗1 Indoor temp. : 27°CDB, 19.5°CWB / outdoor temp. : 35°CDB / Equivalent piping length : 7.5 m, level difference : 0 m.
∗2 Indoor temp. : 27°CDB, 19.0°CWB / outdoor temp. : 35°CDB / Equivalent piping length : 7.5 m, level difference : 0 m.
3 Capacities are net, including a deduction for cooling (an addition for heating) for indoor fan motor heat.
∗4 Anechoic chamber conversion value, measured at a point 1.5 m in front of the unit at a height of 1.5 m. During actual operation, these values are normally somewhat higher as a result of ambient conditions.
5 Refer to page 293 for Fan Motor Input.

Conversion Formulae
kcal/h=kW×860 Btu/h=kW×3412 cfm=m³/min×35.3

10

Floor Standing Type

Model			FXLQ40MAVE	FXLQ50MAVE	FXLQ63MAVE
∗1 Cooling Capacity (19.5°CWB)		kcal/h	4,000	5,000	6,300
		Btu/h	16,000	19,800	24,900
		kW	4.7	5.8	7.3
∗2 Cooling Capacity (19.0°CWB)		kW	4.5	5.6	7.1
Casing Color			Ivory White (5Y7.5/1)	Ivory White (5Y7.5/1)	Ivory White (5Y7.5/1)
Dimensions: (H×W×D)		mm	600×1,140×222	600×1,420×222	600×1,420×222
Coil (Cross Fin Coil)	Rows×Stages×Fin Pitch	mm	3×14×1.5	3×14×1.5	3×14×1.5
	Face Area	m²	0.200	0.282	0.282
Fan	Model		2D14B13	2D14B20	2D14B20
	Type		Sirocco Fan	Sirocco Fan	Sirocco Fan
	Motor Output × Number of Units	W	25×1	35×1	35×1
	Air Flow Rate (H/L)	m³/min	11/8.5	14/11	16/12
		cfm	388/300	494/388	565/424
	Drive		Direct Drive	Direct Drive	Direct Drive
Temperature Control			Microprocessor Thermostat for Cooling and Heating	Microprocessor Thermostat for Cooling and Heating	Microprocessor Thermostat for Cooling and Heating
Sound Absorbing Thermal Insulation Material			Glass Fiber/ Urethane Foam	Glass Fiber/ Urethane Foam	Glass Fiber/ Urethane Foam
Air Filter			Resin Net (with Mold Resistant)	Resin Net (with Mold Resistant)	Resin Net (with Mold Resistant)
Piping Connections	Liquid Pipes	mm	ϕ6.4 (Flare Connection)	ϕ6.4 (Flare Connection)	ϕ9.5 (Flare Connection)
	Gas Pipes	mm	ϕ12.7 (Flare Connection)	ϕ12.7 (Flare Connection)	ϕ15.9 (Flare Connection)
	Drain Pipe	mm	ϕ21 O.D (Vinyl Chloride)	ϕ21 O.D (Vinyl Chloride)	ϕ21 O.D (Vinyl Chloride)
Machine Weight (Mass)		kg	30	36	36
∗4 Sound Level (H/L) (220V)		dBA	38/33	39/34	40/35
Safety Devices			Fuse. Thermal Protector for Fan Motor.	Fuse. Thermal Protector for Fan Motor.	Fuse. Thermal Protector for Fan Motor.
Refrigerant Control			Electronic Expansion Valve	Electronic Expansion Valve	Electronic Expansion Valve
Connectable Outdoor Unit			R-410A P Series	R-410A P Series	R-410A P Series
Standard Accessories			Operation Manual. Installation Manual. Insulation for Fitting. Drain Hose. Clamps. Screws. Washers. Level Adjustment Screw.	Operation Manual. Installation Manual. Insulation for Fitting. Drain Hose. Clamps. Screws. Washers. Level Adjustment Screw.	Operation Manual. Installation Manual. Insulation for Fitting. Drain Hose. Clamps. Screws. Washers. Level Adjustment Screw.
Drawing No.			C : 3D038816A		

Note:

∗1 Indoor temp. : 27°CDB, 19.5°CWB / outdoor temp. : 35°CDB / Equivalent piping length : 7.5 m, level difference : 0 m.
∗2 Indoor temp. : 27°CDB, 19.0°CWB / outdoor temp. : 35°CDB / Equivalent piping length : 7.5 m, level difference : 0 m.
3 Capacities are net, including a deduction for cooling (an addition for heating) for indoor fan motor heat.
∗4 Anechoic chamber conversion value, measured at a point 1.5 m in front of the unit at a height of 1.5 m. During actual operation, these values are normally somewhat higher as a result of ambient conditions.
5 Refer to page 293 for Fan Motor Input.

Conversion Formulae
kcal/h=kW×860 Btu/h=kW×3412 cfm=m³/min×35.3

2.2 FXNQ-MA

Concealed Floor Standing Type

Model			FXNQ20MAVE	FXNQ25MAVE	FXNQ32MAVE
∗1 Cooling Capacity (19.5°CWB)		kcal/h	2,000	2,500	3,200
		Btu/h	7,800	9,900	12,600
		kW	2.3	2.9	3.7
∗2 Cooling Capacity (19.0°CWB)		kW	2.2	2.8	3.6
Casing Color			Galvanized Steel Plate	Galvanized Steel Plate	Galvanized Steel Plate
Dimensions: (H×W×D)		mm	610×930×220	610×930×220	610×1,070×220
Coil (Cross Fin Coil)	Rows×Stages×Fin Pitch	mm	3×14×1.5	3×14×1.5	3×14×1.5
	Face Area	m²	0.159	0.159	0.200
Fan	Model		D14B20	D14B20	2D14B13
	Type		Sirocco Fan	Sirocco Fan	Sirocco Fan
	Motor Output × Number of Units	W	15×1	15×1	25×1
	Air Flow Rate (H/L)	m³/min	7/6	7/6	8/6
		cfm	247/212	247/212	282/212
	Drive		Direct Drive	Direct Drive	Direct Drive
Temperature Control			Microprocessor Thermostat for Cooling and Heating	Microprocessor Thermostat for Cooling and Heating	Microprocessor Thermostat for Cooling and Heating
Sound Absorbing Thermal Insulation Material			Glass Fiber/ Urethane Foam	Glass Fiber/ Urethane Foam	Glass Fiber/ Urethane Foam
Air Filter			Resin Net (with Mold Resistant)	Resin Net (with Mold Resistant)	Resin Net (with Mold Resistant)
Piping Connections	Liquid Pipes	mm	ϕ6.4 (Flare Connection)	ϕ6.4 (Flare Connection)	ϕ6.4 (Flare Connection)
	Gas Pipes	mm	ϕ12.7 (Flare Connection)	ϕ12.7 (Flare Connection)	ϕ12.7 (Flare Connection)
	Drain Pipe	mm	ϕ21 O.D (Vinyl Chloride)	ϕ21 O.D (Vinyl Chloride)	ϕ21 O.D (Vinyl Chloride)
Machine Weight (Mass)		kg	19	19	23
∗4 Sound Level (H/L) (220V)		dBA	35/32	35/32	35/32
Safety Devices			Fuse. Thermal Protector for Fan Motor.	Fuse. Thermal Protector for Fan Motor.	Fuse. Thermal Protector for Fan Motor.
Refrigerant Control			Electronic Expansion Valve	Electronic Expansion Valve	Electronic Expansion Valve
Connectable Outdoor Unit			R-410A P Series	R-410A P Series	R-410A P Series
Standard Accessories			Operation Manual. Installation Manual. Insulation for Fitting. Drain Hose. Clamps. Screws. Washers. Level Adjustment Screw.	Operation Manual. Installation Manual. Insulation for Fitting. Drain Hose. Clamps. Screws. Washers. Level Adjustment Screw.	Operation Manual. Installation Manual. Insulation for Fitting. Drain Hose. Clamps. Screws. Washers. Level Adjustment Screw.
Drawing No.			C : 3D038817A		

Note:

∗1 Indoor temp. : 27°CDB, 19.5°CWB / outdoor temp. : 35°CDB / Equivalent piping length : 7.5 m, level difference : 0 m.
∗2 Indoor temp. : 27°CDB, 19.0°CWB / outdoor temp. : 35°CDB / Equivalent piping length : 7.5 m, level difference : 0 m.
3 Capacities are net, including a deduction for cooling (an addition for heating) for indoor fan motor heat.
∗4 Anechoic chamber conversion value, measured at a point 1.5 m in front of the unit at a height of 1.5 m. During actual operation, these values are normally somewhat higher as a result of ambient conditions.
5 Refer to page 293 for Fan Motor Input.

Conversion Formulae
kcal/h=kW×860 Btu/h=kW×3412 cfm=m³/min×35.3

10

Concealed Floor Standing Type

Model			FXNQ40MAVE	FXNQ50MAVE	FXNQ63MAVE
∗1 Cooling Capacity (19.5°CWB)		kcal/h	4,000	5,000	6,300
		Btu/h	16,000	19,800	24,900
		kW	4.7	5.8	7.3
∗2 Cooling Capacity (19.0°CWB)		kW	4.5	5.6	7.1
Casing Color			Galvanized Steel Plate	Galvanized Steel Plate	Galvanized Steel Plate
Dimensions: (H×W×D)		mm	610×1,070×220	610×1,350×220	610×1,350×220
Coil (Cross Fin Coil)	Rows×Stages×Fin Pitch	mm	3×14×1.5	3×14×1.5	3×14×1.5
	Face Area	m²	0.200	0.282	0.282
Fan	Model		2D14B13	2D14B20	2D14B20
	Type		Sirocco Fan	Sirocco Fan	Sirocco Fan
	Motor Output × Number of Units	W	25×1	35×1	35×1
	Air Flow Rate (H/L)	m³/min	11/8.5	14/11	16/12
		cfm	388/300	494/388	565/424
	Drive		Direct Drive	Direct Drive	Direct Drive
Temperature Control			Microprocessor Thermostat for Cooling and Heating	Microprocessor Thermostat for Cooling and Heating	Microprocessor Thermostat for Cooling and Heating
Sound Absorbing Thermal Insulation Material			Glass Fiber / Urethane Foam	Glass Fiber / Urethane Foam	Glass Fiber / Urethane Foam
Air Filter			Resin Net (with Mold Resistant)	Resin Net (with Mold Resistant)	Resin Net (with Mold Resistant)
Piping Connections	Liquid Pipes	mm	ϕ6.4 (Flare Connection)	ϕ6.4 (Flare Connection)	ϕ9.5 (Flare Connection)
	Gas Pipes	mm	ϕ12.7 (Flare Connection)	ϕ12.7 (Flare Connection)	ϕ15.9 (Flare Connection)
	Drain Pipe	mm	ϕ21 O.D (Vinyl Chloride)	ϕ21 O.D (Vinyl Chloride)	ϕ21 O.D (Vinyl Chloride)
Machine Weight (Mass)		kg	23	27	27
∗4 Sound Level (H/L) (220V)		dBA	38/33	39/34	40/35
Safety Devices			Fuse. Thermal Protector for Fan Motor.	Fuse. Thermal Protector for Fan Motor.	Fuse. Thermal Protector for Fan Motor.
Refrigerant Control			Electronic Expansion Valve	Electronic Expansion Valve	Electronic Expansion Valve
Connectable Outdoor Unit			R-410A P Series	R-410A P Series	R-410A P Series
Standard Accessories			Operation Manual. Installation Manual. Insulation for Fitting. Drain Hose. Clamps. Screws. Washers. Level Adjustment Screw.	Operation Manual. Installation Manual. Insulation for Fitting. Drain Hose. Clamps. Screws. Washers. Level Adjustment Screw.	Operation Manual. Installation Manual. Insulation for Fitting. Drain Hose. Clamps. Screws. Washers. Level Adjustment Screw.
Drawing No.			C : 3D038817A		

Note:

∗1 Indoor temp. : 27°CDB, 19.5°CWB / outdoor temp. : 35°CDB / Equivalent piping length : 7.5 m, level difference : 0 m.
∗2 Indoor temp. : 27°CDB, 19.0°CWB / outdoor temp. : 35°CDB / Equivalent piping length : 7.5 m, level difference : 0 m.
3 Capacities are net, including a deduction for cooling (an addition for heating) for indoor fan motor heat.
∗4 Anechoic chamber conversion value, measured at a point 1.5 m in front of the unit at a height of 1.5 m. During actual operation, these values are normally somewhat higher as a result of ambient conditions.
5 Refer to page 293 for Fan Motor Input.

Conversion Formulae
kcal/h=kW×860 Btu/h=kW×3412 cfm=m³/min×35.3

3. Dimensions

3.1 FXLQ-MA

FXLQ20MA
FXLQ25MA

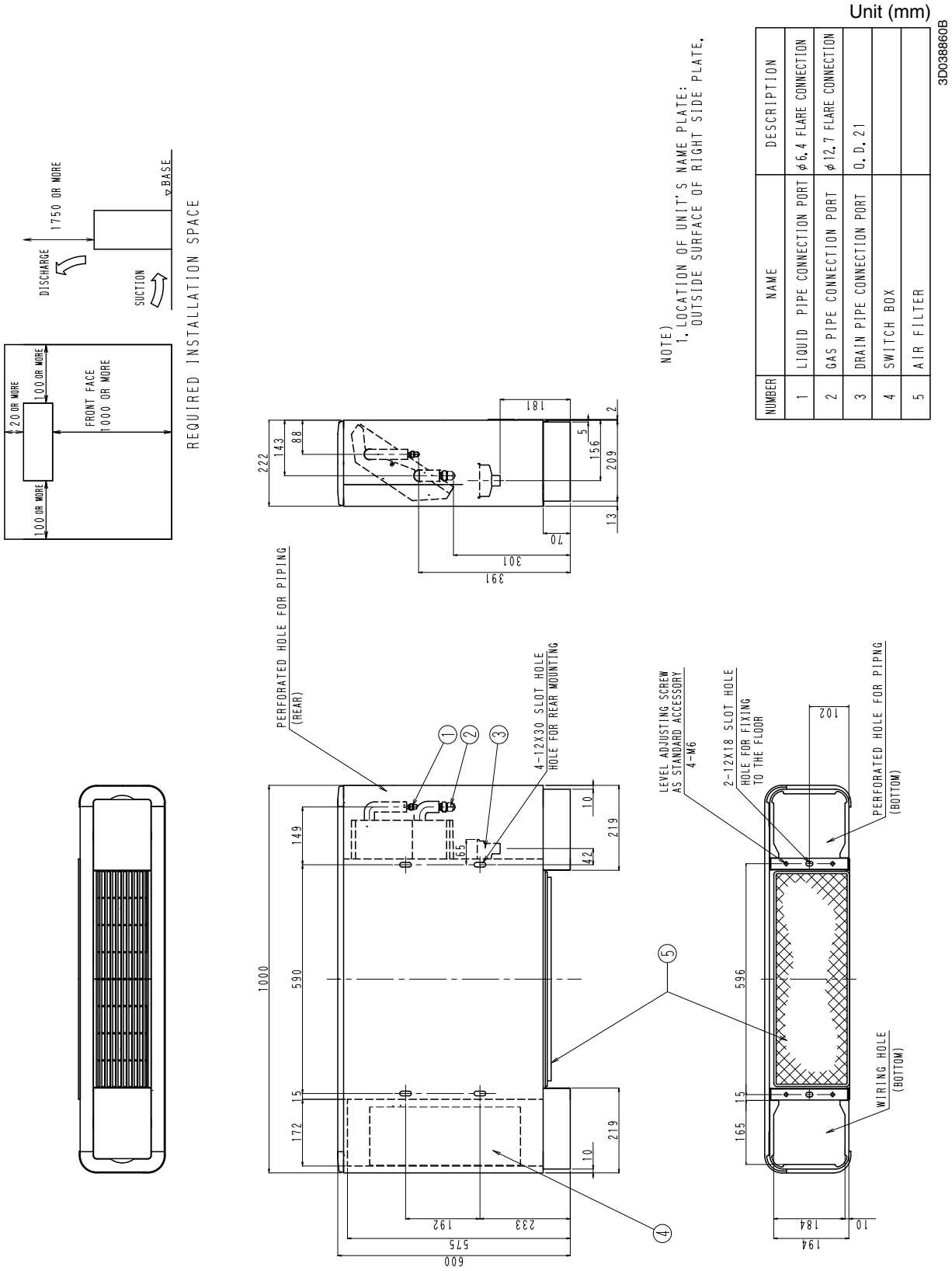

FXLQ32MA
FXLQ40MA

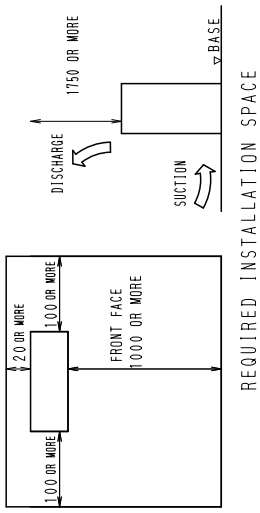

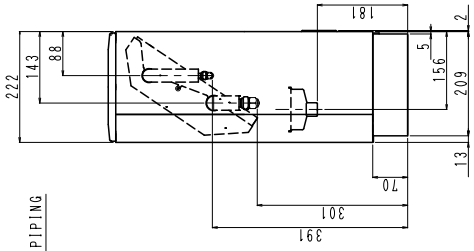

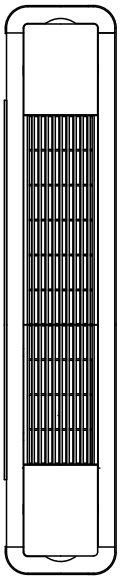

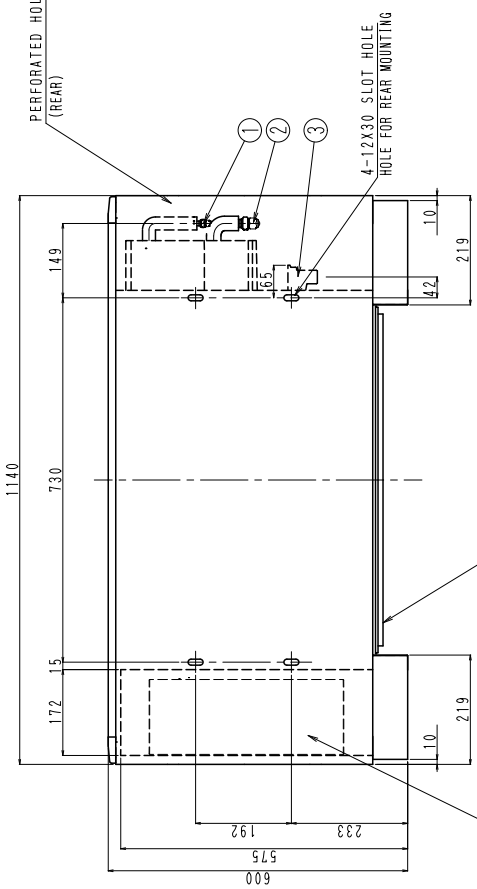

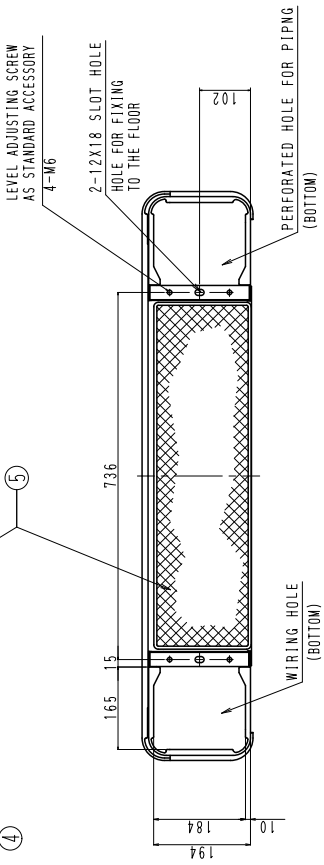

NOTE)
1. LOCATION OF UNIT'S NAME PLATE:
OUTSIDE SURFACE OF RIGHT SIDE PLATE.

Unit (mm)

NUMBER	NAME	DESCRIPTION
1	LIQUID PIPE CONNECTION PORT	φ6.4 FLARE CONNECTION
2	GAS PIPE CONNECTION PORT	φ12.7 FLARE CONNECTION
3	DRAIN PIPE CONNECTION PORT	O.D.21
4	SWITCH BOX	
	AIR FILTER	

3D038861B

FXLQ50MA
FXLQ63MA

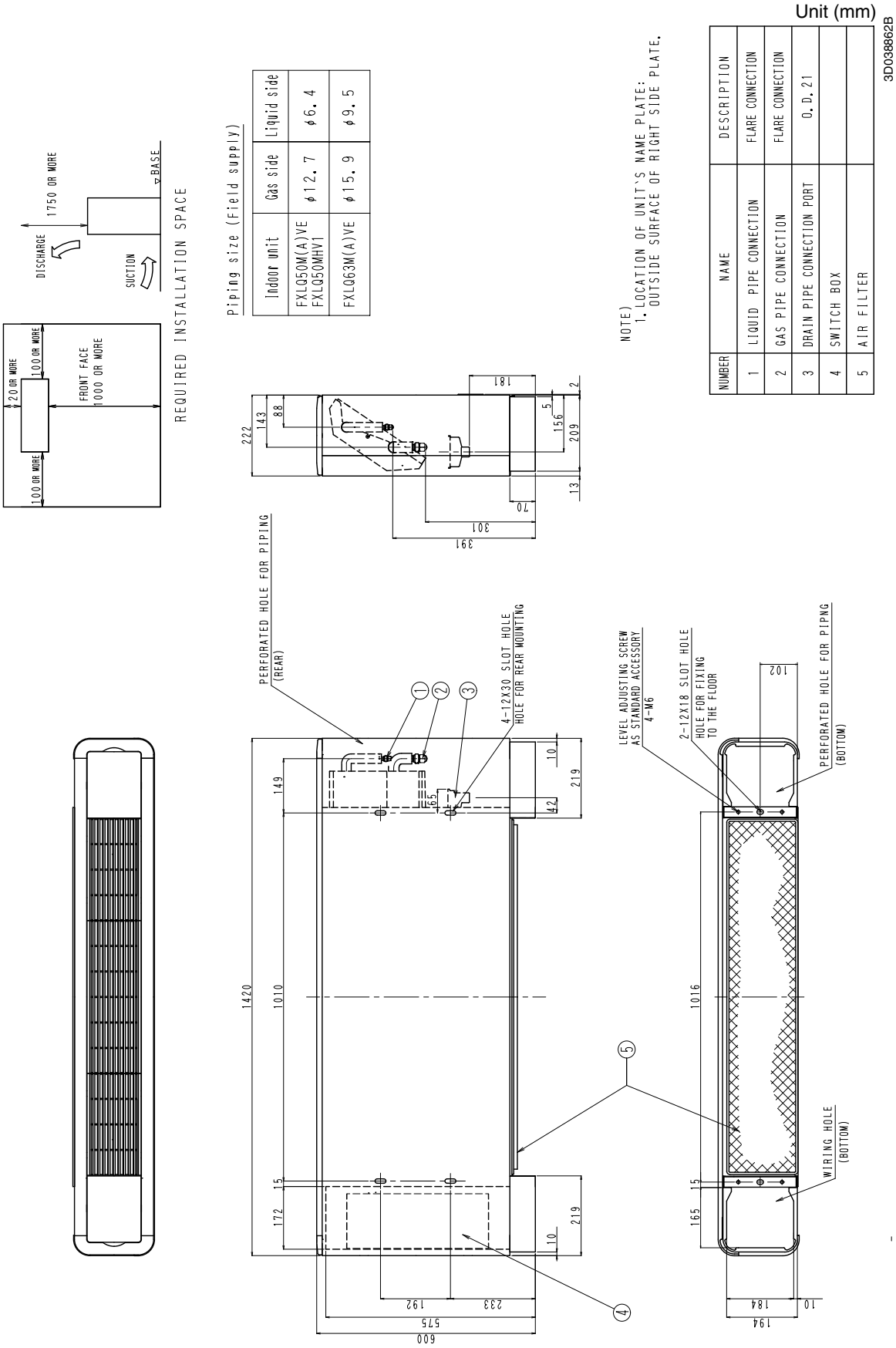

10

3.2 FXNQ-MA

FXNQ20MA
FXNQ25MA

Unit (mm)

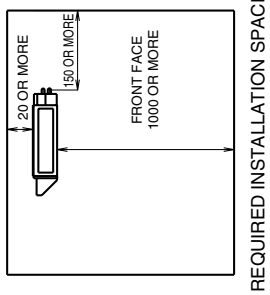

NUMBER	NAME	DESCRIPTION
1	LIQUID PIPE CONNECTION PORT	φ6.4 FLARE CONNECTION
2	GAS PIPE CONNECTION PORT	φ12.7 FLARE CONNECTION
3	DRAIN PIPE CONNECTION PORT	O.D.21
4	SWITCH BOX	
5	AIR FILTER	

3D038863B

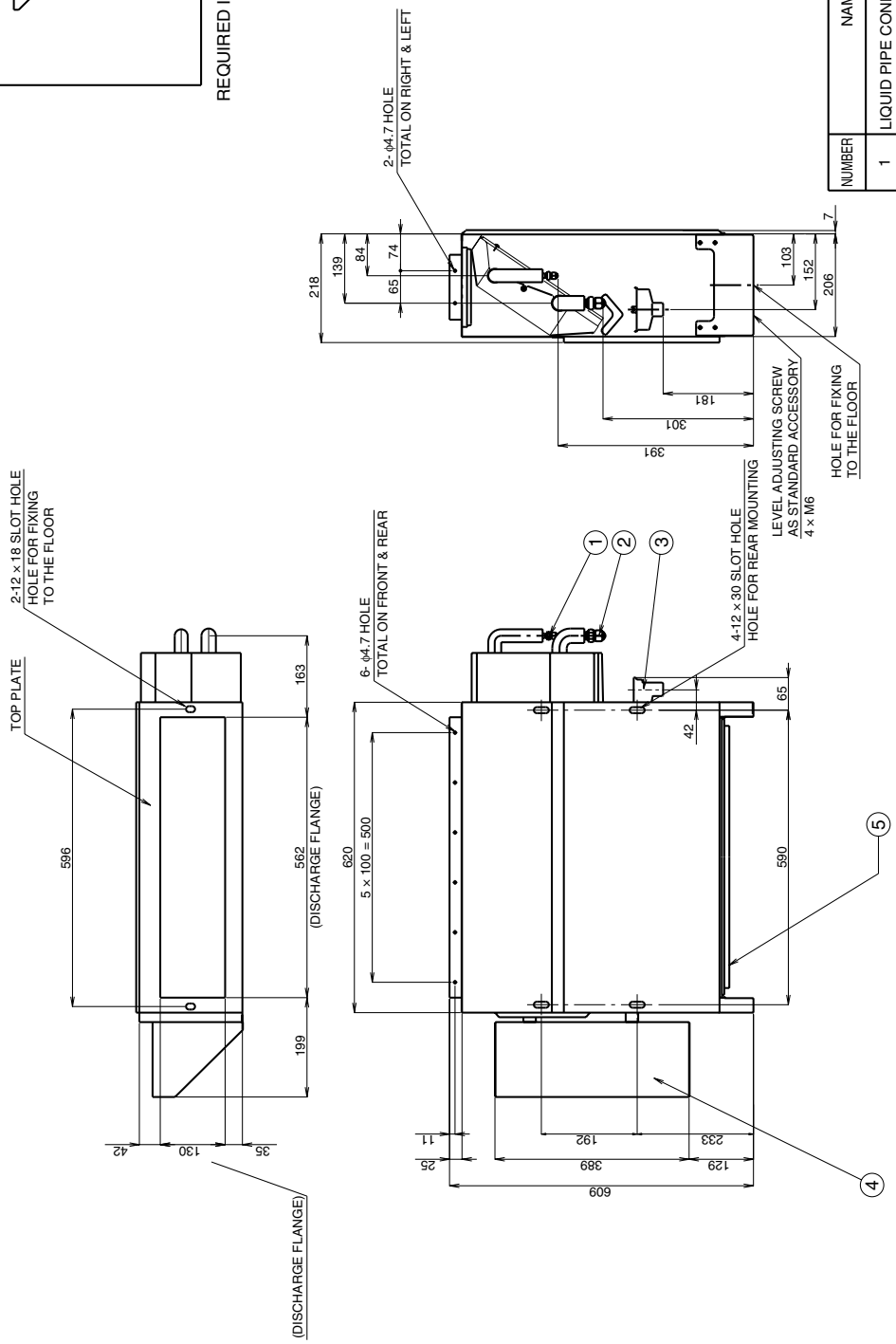

NOTE)
1. LOCATION OF UNIT'S NAME PLATE:
THE RIGHT LOWER CORNER OF FRONT PLATE

FXNQ32MA
FXNQ40MA

Unit (mm)

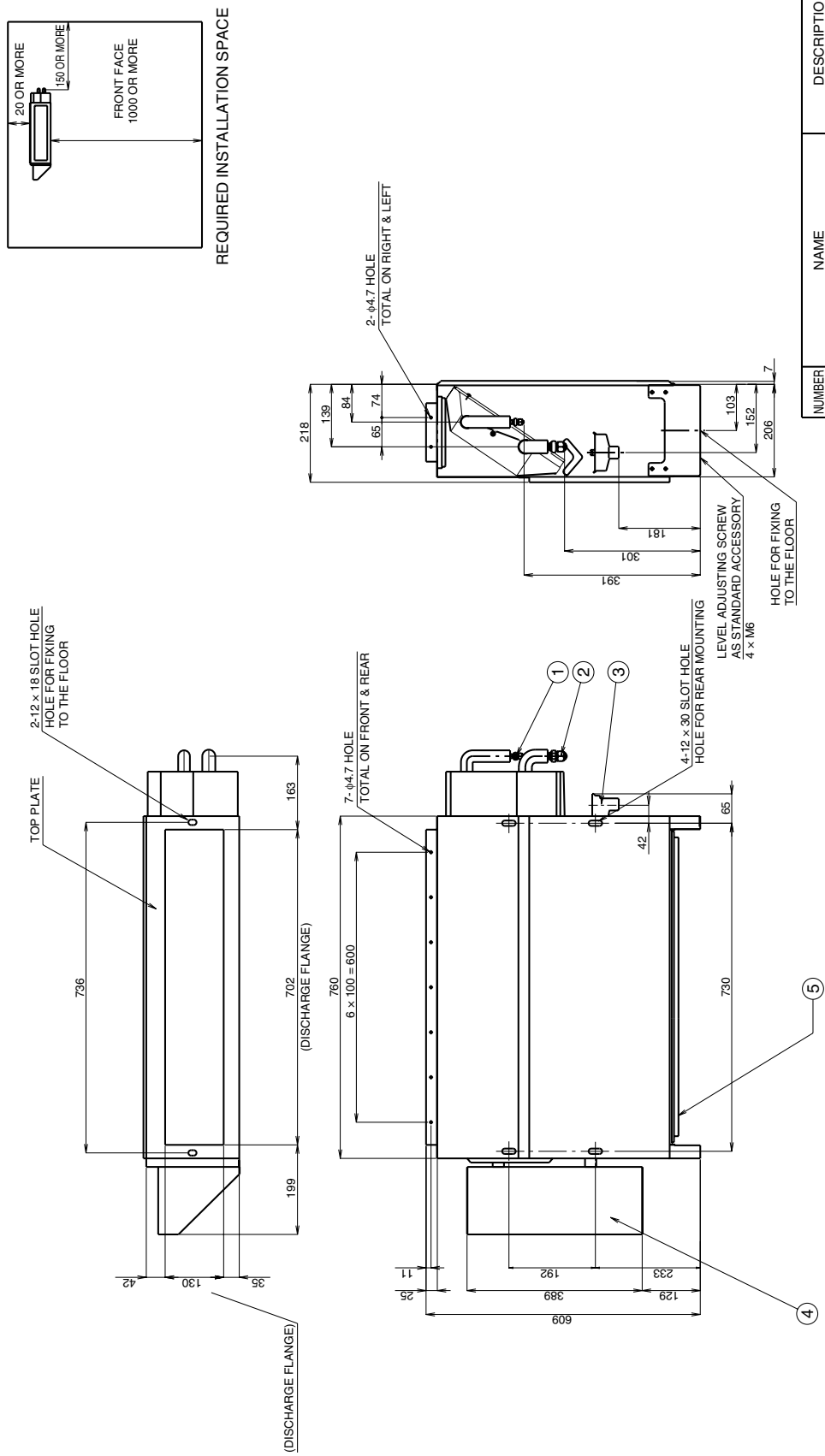

NUMBER	NAME	DESCRIPTION
1	LIQUID PIPE CONNECTION PORT	φ6.4 FLARE CONNECTION
2	GAS PIPE CONNECTION PORT	φ12.7 FLARE CONNECTION
3	DRAIN PIPE CONNECTION PORT	O.D.21
4	SWITCH BOX	
5	AIR FILTER	

NOTE)
1. LOCATION OF UNIT'S NAME PLATE:
THE RIGHT LOWER CORNER OF FRONT PLATE

10

FXNQ50MA
FXNQ63MA

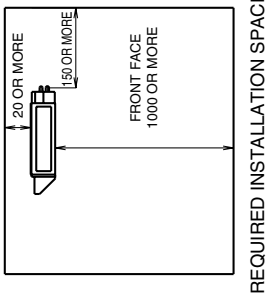

REQUIRED INSTALLATION SPACE

Unit (mm)

Indoor unit	Gas side	Liquid side
FXNQ50M(A)VE FXNP56MMVC FJNP56MMVC	φ12.7	φ6.4
FXNQ63M(A)VE FXNP71MMVC FJNP71MMVC	φ15.9	φ9.5

Piping size (Field supply)

NUMBER	NAME	DESCRIPTION
1	LIQUID PIPE CONNECTION PORT	FLARE CONNECTION
2	GAS PIPE CONNECTION	FLARE CONNECTION
3	DRAIN PIPE CONNECTION	O.D.21
4	SWITCH BOX	
5	AIR FILTER	

3D038865C

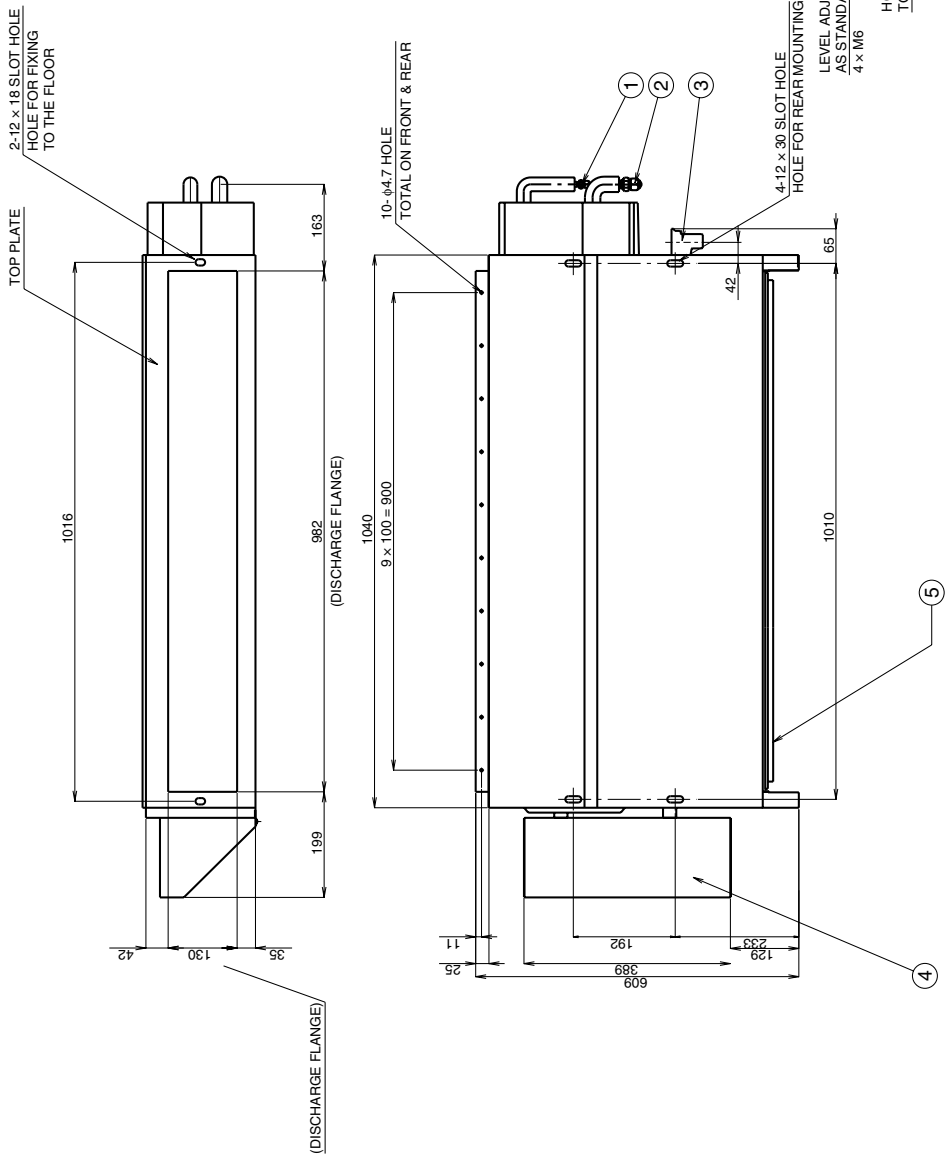

1. LOCATION OF UNIT'S NAME PLATE:
THE RIGHT LOWER CORNER OF FRONT PLATE

4. Piping Diagrams

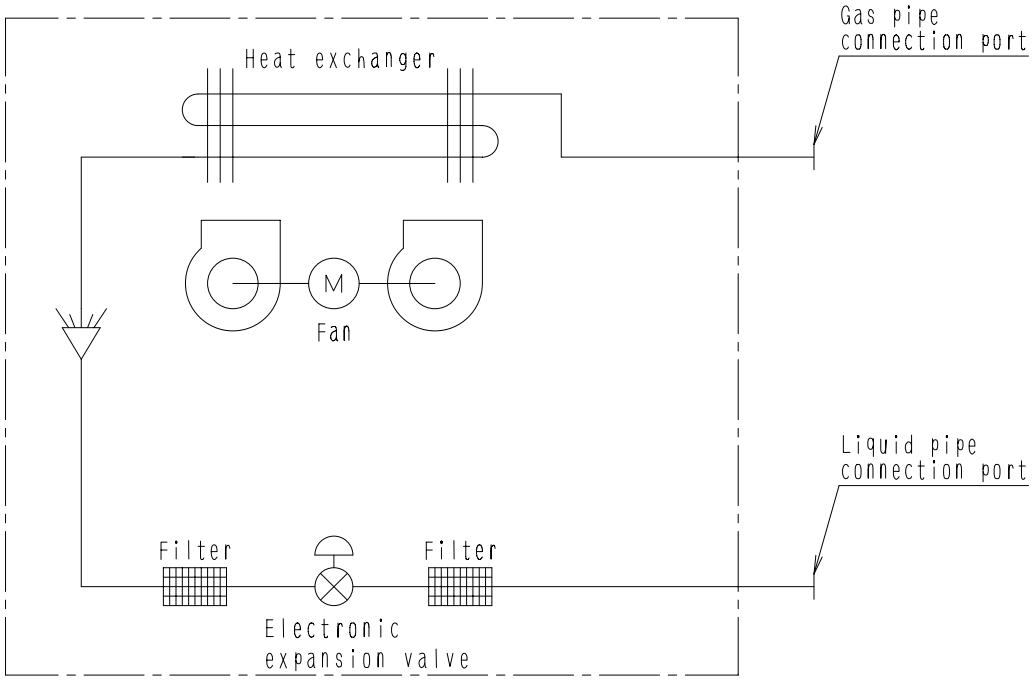

4D034245A

■ **Refrigerant pipe connection port diameters**

(mm)

Model	Gas	Liquid
FXLQ20 · 25 · 32 · 40 · 50MA FXNQ20 · 25 · 32 · 40 · 50MA	ϕ12.7	ϕ6.4
FXLQ63MA FXNQ63MA	ϕ15.9	ϕ9.5

5. Wiring Diagrams

FXLQ20 · 25 · 32 · 40 · 50 · 63MAVE
FXNQ20 · 25 · 32 · 40 · 50 · 63MAVE

3D039826D

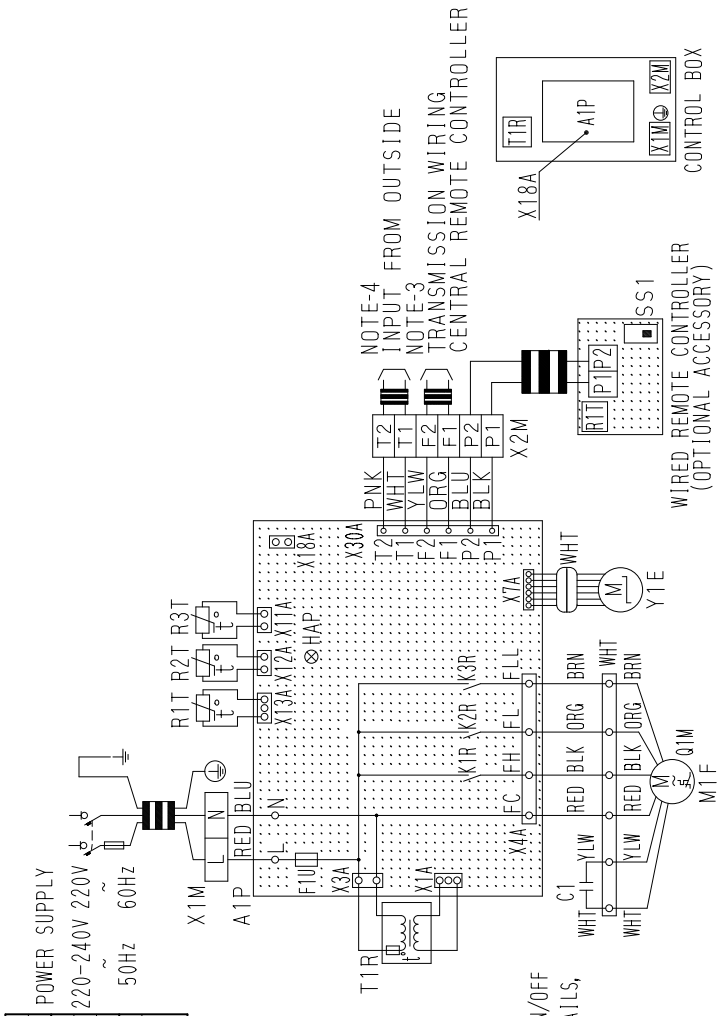

INDOOR UNIT		X2M	TERMINAL BLOCK(CONTROL)
A1P	PRINTED CIRCUIT BOARD	Y1E	ELECTRONIC EXPANSION VALVE
C1	CAPACITOR (M1F)	WIRED REMOTE CONTROLLER	
F1U	FUSE(Ⓑ,5A, 250V)	R1T	THERMISTOR(AIR)
HAP	LIGHT EMITTING DIODE (SERVICE MONITOR-GREEN)	SS1	SELECTOR SWITCH(MAIN/SUB)
K1R-K3R	MAGNETIC RELAY(M1F)	X18A	CONNECTOR FOR OPTIONAL PARTS CONNECTORWIRING ADAPTOR FOR ELECTORICAL APPENDICES)
M1F	MOTOR (INDOOR FAN)		
Q1M	THERMO SWITCH (M1F EMBEDDED)		
R1T	THERMISTOR(AIR)		
R2T・R3T	THERMISTOR(COIL)		
T1R	TRANSFORMER(220-240V/22V)		
X1M	TERMINAL BLOCK(POWER)		

NOTES)
1. ▭ :TERMINAL BLOCK, ▭, D– :CONNECTOR, -o- :TERMINAL
2. ▬ :FIELD WIRING
3. IN CASE USING CENTRAL REMOTE CONTROLLER, CONNECT IT TO THE UNIT IN ACCORDANCE WITH THE ATTACHED INSTRUCTIO MANUAL.
4. WHEN CONNECTING THE INPUT WIRES FROM OUTSIDE, FORCED OFF OR ON/OFF CONTROL OPERATION CAN BE SELECTED BY REMOTE CONTROLLER, IN DETAILS, REFER TO THE INSTALLATION MANUAL ATTACHED THE UNIT.
5. SYMBOLS SHOW AS FOLLOWS, (PNK:PINK WHT:WHITE YLW:YELLOW ORG:ORANGE BLU:BLUE BLK:BLACK RED:RED BRN:BROWN)
6. USE COPPER CONDUCTORS ONLY.

6. Electric Characteristics

Units				Power supply		IFM		Input(W)	
Model	Hz	Volts	Voltage range	MCA	MFA	KW	FLA	Cooling	Heating
FXLQ・FXNQ20MAVE	50	220-240	MAX. 264 Min. 198	0.3	15	0.015	0.2	49	49
FXLQ・FXNQ25MAVE				0.3	15	0.015	0.2	49	49
FXLQ・FXNQ32MAVE				0.6	15	0.025	0.5	90	90
FXLQ・FXNQ40MAVE				0.6	15	0.025	0.5	90	90
FXLQ・FXNQ50MAVE				0.6	15	0.035	0.5	110	110
FXLQ・FXNQ63MAVE				0.6	15	0.035	0.5	110	110

Symbols:

MCA : Min. Circuit Amps (A)
MFA : Max. Fuse Amps (See note 5)
KW : Fan Motor Rated Output(KW)
FLA : Full Load Amps(A)
IFM : Indoor Fan Motor

Note:

1. Voltage range

   Units are suitable for use on electrical systems where voltage supplied to unit terminals is not below or above listed range limits,

2. Maximum allowable voltage unbalance between phases is 2%.

3. MCA/MFA

   MCA = 1.25 X FLA

   MFA ≦ 4 X FLA
   (Next lower standard fuse rating. Min.15A)

4. Select wire size based on the MCA.

5. Instead of fuse, use Circuit Breaker.

C : 4D034579B

10

7. Capacity Tables

7.1 Cooling Capacity

FXLQ-MA / FXNQ-MA [50Hz]

Cooling capacity

Unit Size	Outdoor air temp. °CDB	Indoor air temp.													
		14.0°CWB		16.0°CWB		18.0°CWB		19.0°CWB		20.0°CWB		22.0°CWB		24.0°CWB	
		20°CDB		23°CDB		26°CDB		27°CDB		28°CDB		30°CDB		32°CDB	
		TC	SC	TC	SC	TC	SC	TC	SC	TC	SC	TC	SC	TC	SC
20	10.0	1.5	1.3	1.8	1.5	2.1	1.7	2.2	1.7	2.3	1.8	2.6	1.8	2.9	1.8
	12.0	1.5	1.3	1.8	1.5	2.1	1.7	2.2	1.7	2.3	1.8	2.6	1.8	2.9	1.7
	14.0	1.5	1.3	1.8	1.5	2.1	1.7	2.2	1.7	2.3	1.8	2.6	1.8	2.8	1.7
	16.0	1.5	1.3	1.8	1.5	2.1	1.7	2.2	1.7	2.3	1.8	2.6	1.8	2.8	1.7
	18.0	1.5	1.3	1.8	1.5	2.1	1.7	2.2	1.7	2.3	1.8	2.6	1.8	2.7	1.7
	20.0	1.5	1.3	1.8	1.5	2.1	1.7	2.2	1.7	2.3	1.8	2.6	1.8	2.7	1.6
	21.0	1.5	1.3	1.8	1.5	2.1	1.7	2.2	1.7	2.3	1.8	2.6	1.8	2.7	1.6
	23.0	1.5	1.3	1.8	1.5	2.1	1.7	2.2	1.7	2.3	1.8	2.6	1.8	2.6	1.6
	25.0	1.5	1.3	1.8	1.5	2.1	1.7	2.2	1.7	2.3	1.8	2.6	1.7	2.6	1.6
	27.0	1.5	1.3	1.8	1.5	2.1	1.7	2.2	1.7	2.3	1.8	2.5	1.7	2.6	1.6
	29.0	1.5	1.3	1.8	1.5	2.1	1.7	2.2	1.7	2.3	1.8	2.5	1.7	2.5	1.6
	31.0	1.5	1.3	1.8	1.5	2.1	1.7	2.2	1.7	2.3	1.8	2.4	1.7	2.5	1.6
	33.0	1.5	1.3	1.8	1.5	2.1	1.7	2.2	1.7	2.3	1.8	2.4	1.7	2.5	1.6
	35.0	1.5	1.3	1.8	1.5	2.1	1.7	2.2	1.7	2.3	1.7	2.4	1.6	2.4	1.5
	37.0	1.5	1.3	1.8	1.5	2.1	1.7	2.2	1.7	2.3	1.7	2.3	1.6	2.4	1.6
	39.0	1.5	1.3	1.8	1.5	2.1	1.7	2.2	1.7	2.2	1.7	2.3	1.6	2.3	1.5
25	10.0	1.9	1.6	2.3	1.8	2.6	2.0	2.8	2.1	3.0	2.1	3.4	2.1	3.7	2.1
	12.0	1.9	1.6	2.3	1.8	2.6	2.0	2.8	2.1	3.0	2.1	3.4	2.1	3.6	2.1
	14.0	1.9	1.6	2.3	1.8	2.6	2.0	2.8	2.1	3.0	2.1	3.4	2.1	3.6	2.1
	16.0	1.9	1.6	2.3	1.8	2.6	2.0	2.8	2.1	3.0	2.1	3.4	2.1	3.5	2.1
	18.0	1.9	1.6	2.3	1.8	2.6	2.0	2.8	2.1	3.0	2.1	3.4	2.1	3.5	2.0
	20.0	1.9	1.6	2.3	1.8	2.6	2.0	2.8	2.1	3.0	2.1	3.4	2.1	3.4	2.0
	21.0	1.9	1.6	2.3	1.8	2.6	2.0	2.8	2.1	3.0	2.1	3.4	2.1	3.4	2.0
	23.0	1.9	1.6	2.3	1.8	2.6	2.0	2.8	2.1	3.0	2.1	3.3	2.1	3.4	2.0
	25.0	1.9	1.6	2.3	1.8	2.6	2.0	2.8	2.1	3.0	2.1	3.3	2.1	3.3	2.0
	27.0	1.9	1.6	2.3	1.8	2.6	2.0	2.8	2.1	3.0	2.1	3.2	2.1	3.3	1.9
	29.0	1.9	1.6	2.3	1.8	2.6	2.0	2.8	2.1	3.0	2.1	3.2	2.0	3.2	1.9
	31.0	1.9	1.6	2.3	1.8	2.6	2.0	2.8	2.1	3.0	2.1	3.1	2.0	3.2	1.9
	33.0	1.9	1.6	2.3	1.8	2.6	2.0	2.8	2.1	3.0	2.1	3.1	2.0	3.1	1.9
	35.0	1.9	1.6	2.3	1.8	2.6	2.0	2.8	2.1	3.0	2.1	3.0	2.0	3.1	1.9
	37.0	1.9	1.6	2.3	1.8	2.6	2.0	2.8	2.1	2.9	2.0	3.0	2.0	3.0	1.9
	39.0	1.9	1.6	2.3	1.8	2.6	2.0	2.8	2.1	2.9	2.0	2.9	2.0	3.0	1.9
32	10.0	2.4	2.1	2.9	2.2	3.4	2.5	3.6	2.5	3.8	2.6	4.3	2.6	4.7	2.6
	12.0	2.4	2.1	2.9	2.2	3.4	2.5	3.6	2.5	3.8	2.6	4.3	2.6	4.7	2.6
	14.0	2.4	2.1	2.9	2.2	3.4	2.5	3.6	2.5	3.8	2.6	4.3	2.6	4.6	2.6
	16.0	2.4	2.1	2.9	2.2	3.4	2.5	3.6	2.5	3.8	2.6	4.3	2.6	4.6	2.5
	18.0	2.4	2.1	2.9	2.2	3.4	2.5	3.6	2.5	3.8	2.6	4.3	2.6	4.5	2.5
	20.0	2.4	2.1	2.9	2.2	3.4	2.5	3.6	2.5	3.8	2.6	4.3	2.6	4.4	2.5
	21.0	2.4	2.1	2.9	2.2	3.4	2.5	3.6	2.5	3.8	2.6	4.3	2.6	4.4	2.5
	23.0	2.4	2.1	2.9	2.2	3.4	2.5	3.6	2.5	3.8	2.6	4.2	2.6	4.3	2.4
	25.0	2.4	2.1	2.9	2.2	3.4	2.5	3.6	2.5	3.8	2.6	4.2	2.6	4.3	2.4
	27.0	2.4	2.1	2.9	2.2	3.4	2.5	3.6	2.5	3.8	2.6	4.1	2.5	4.2	2.4
	29.0	2.4	2.1	2.9	2.2	3.4	2.5	3.6	2.5	3.8	2.6	4.1	2.5	4.2	2.4
	31.0	2.4	2.1	2.9	2.2	3.4	2.5	3.6	2.5	3.8	2.6	4.0	2.5	4.1	2.4
	33.0	2.4	2.1	2.9	2.2	3.4	2.5	3.6	2.5	3.8	2.6	3.9	2.4	4.0	2.3
	35.0	2.4	2.1	2.9	2.2	3.4	2.5	3.6	2.5	3.8	2.5	3.9	2.4	4.0	2.3
	37.0	2.4	2.1	2.9	2.2	3.4	2.5	3.6	2.5	3.7	2.5	3.8	2.4	3.9	2.3
	39.0	2.4	2.1	2.9	2.2	3.4	2.5	3.6	2.6	3.7	2.5	3.8	2.4	3.8	2.3

Cooling capacity

Unit Size	Outdoor air temp. °CDB	Indoor air temp.													
		14.0°CWB		16.0°CWB		18.0°CWB		19.0°CWB		20.0°CWB		22.0°CWB		24.0°CWB	
		20°CDB		23°CDB		26°CDB		27°CDB		28°CDB		30°CDB		32°CDB	
		TC	SC	TC	SC	TC	SC	TC	SC	TC	SC	TC	SC	TC	SC
40	10.0	3.0	2.5	3.6	2.7	4.2	3.1	4.5	3.1	4.8	3.2	5.4	3.3	5.9	3.3
	12.0	3.0	2.5	3.6	2.7	4.2	3.1	4.5	3.1	4.8	3.2	5.4	3.3	5.8	3.3
	14.0	3.0	2.5	3.6	2.7	4.2	3.1	4.5	3.1	4.8	3.2	5.4	3.3	5.8	3.2
	16.0	3.0	2.5	3.6	2.7	4.2	3.1	4.5	3.1	4.8	3.2	5.4	3.3	5.7	3.2
	18.0	3.0	2.5	3.6	2.7	4.2	3.1	4.5	3.1	4.8	3.2	5.4	3.3	5.6	3.1
	20.0	3.0	2.5	3.6	2.7	4.2	3.1	4.5	3.1	4.8	3.2	5.4	3.3	5.5	3.1
	21.0	3.0	2.5	3.6	2.7	4.2	3.1	4.5	3.1	4.8	3.2	5.4	3.3	5.5	3.1
	23.0	3.0	2.5	3.6	2.7	4.2	3.1	4.5	3.1	4.8	3.2	5.3	3.2	5.4	3.0
	25.0	3.0	2.5	3.6	2.7	4.2	3.1	4.5	3.1	4.8	3.2	5.2	3.2	5.3	3.0
	27.0	3.0	2.5	3.6	2.7	4.2	3.1	4.5	3.1	4.8	3.2	5.2	3.1	5.3	3.0
	29.0	3.0	2.5	3.6	2.7	4.2	3.1	4.5	3.1	4.8	3.2	5.1	3.1	5.2	3.0
	31.0	3.0	2.5	3.6	2.7	4.2	3.1	4.5	3.1	4.8	3.2	5.0	3.1	5.1	2.9
	33.0	3.0	2.5	3.6	2.7	4.2	3.1	4.5	3.1	4.8	3.2	4.9	3.0	5.0	2.9
	35.0	3.0	2.5	3.6	2.7	4.2	3.1	4.5	3.1	4.7	3.2	4.9	3.1	5.0	2.9
	37.0	3.0	2.5	3.6	2.7	4.2	3.1	4.5	3.1	4.7	3.2	4.8	3.0	4.9	2.8
	39.0	3.0	2.5	3.6	2.7	4.2	3.1	4.5	3.2	4.6	3.1	4.7	3.0	4.8	2.8
50	10.0	3.8	3.0	4.5	3.4	5.2	3.8	5.6	3.9	6.0	4.0	6.7	4.1	7.4	4.1
	12.0	3.8	3.0	4.5	3.4	5.2	3.8	5.6	3.9	6.0	4.0	6.7	4.1	7.3	4.1
	14.0	3.8	3.0	4.5	3.4	5.2	3.8	5.6	3.9	6.0	4.0	6.7	4.1	7.2	4.0
	16.0	3.8	3.0	4.5	3.4	5.2	3.8	5.6	3.9	6.0	4.0	6.7	4.1	7.1	4.0
	18.0	3.8	3.0	4.5	3.4	5.2	3.8	5.6	3.9	6.0	4.0	6.7	4.1	7.0	3.9
	20.0	3.8	3.0	4.5	3.4	5.2	3.8	5.6	3.9	6.0	4.0	6.7	4.1	6.9	3.9
	21.0	3.8	3.0	4.5	3.4	5.2	3.8	5.6	3.9	6.0	4.0	6.7	4.1	6.8	3.8
	23.0	3.8	3.0	4.5	3.4	5.2	3.8	5.6	3.9	6.0	4.0	6.6	4.0	6.7	3.8
	25.0	3.8	3.0	4.5	3.4	5.2	3.8	5.6	3.9	6.0	4.0	6.5	4.0	6.6	3.7
	27.0	3.8	3.0	4.5	3.4	5.2	3.8	5.6	3.9	6.0	4.0	6.4	3.9	6.6	3.7
	29.0	3.8	3.0	4.5	3.4	5.2	3.8	5.6	3.9	6.0	4.0	6.3	3.9	6.5	3.7
	31.0	3.8	3.0	4.5	3.4	5.2	3.8	5.6	3.9	6.0	4.0	6.2	3.8	6.4	3.7
	33.0	3.8	3.0	4.5	3.4	5.2	3.8	5.6	3.9	6.0	4.0	6.1	3.8	6.3	3.6
	35.0	3.8	3.0	4.5	3.4	5.2	3.8	5.6	3.9	5.9	4.0	6.0	3.8	6.2	3.6
	37.0	3.8	3.0	4.5	3.4	5.2	3.8	5.6	3.9	5.8	3.9	5.9	3.7	6.1	3.6
	39.0	3.8	3.0	4.5	3.4	5.2	3.8	5.6	3.9	5.7	3.9	5.8	3.7	6.0	3.5
63	10.0	4.8	3.7	5.7	4.2	6.6	4.8	7.1	4.9	7.6	5.0	8.5	5.1	9.3	5.0
	12.0	4.8	3.7	5.7	4.2	6.6	4.8	7.1	4.9	7.6	5.0	8.5	5.1	9.2	5.0
	14.0	4.8	3.7	5.7	4.2	6.6	4.8	7.1	4.9	7.6	5.0	8.5	5.1	9.1	4.9
	16.0	4.8	3.7	5.7	4.2	6.6	4.8	7.1	4.9	7.6	5.0	8.5	5.1	9.0	4.8
	18.0	4.8	3.7	5.7	4.2	6.6	4.8	7.1	4.9	7.6	5.0	8.5	5.1	8.8	4.8
	20.0	4.8	3.7	5.7	4.2	6.6	4.8	7.1	4.9	7.6	5.0	8.5	5.1	8.7	4.7
	21.0	4.8	3.7	5.7	4.2	6.6	4.8	7.1	4.9	7.6	5.0	8.5	5.1	8.7	4.7
	23.0	4.8	3.7	5.7	4.2	6.6	4.8	7.1	4.9	7.6	5.0	8.4	5.0	8.5	4.6
	25.0	4.8	3.7	5.7	4.2	6.6	4.8	7.1	4.9	7.6	5.0	8.3	5.0	8.4	4.5
	27.0	4.8	3.7	5.7	4.2	6.6	4.8	7.1	4.9	7.6	5.0	8.1	4.9	8.3	4.5
	29.0	4.8	3.7	5.7	4.2	6.6	4.8	7.1	4.9	7.6	5.0	8.0	4.8	8.2	4.5
	31.0	4.8	3.7	5.7	4.2	6.6	4.8	7.1	4.9	7.6	5.0	7.9	4.7	8.1	4.4
	33.0	4.8	3.7	5.7	4.2	6.6	4.8	7.1	4.9	7.6	5.0	7.8	4.7	7.9	4.4
	35.0	4.8	3.7	5.7	4.2	6.6	4.8	7.1	4.9	7.5	4.9	7.7	4.7	7.8	4.3
	37.0	4.8	3.7	5.7	4.2	6.6	4.8	7.1	4.9	7.4	4.9	7.5	4.6	7.7	4.2
	39.0	4.8	3.7	5.7	4.2	6.6	4.8	7.1	4.9	7.2	4.8	7.4	4.6	7.6	4.2

TC Total capacity ; kW
SC Sensible capacity ; kW

Refer to Outdoor Unit Capacity Tables : on page 411~, 470~, for the actual performance data of each indoor and outdoor unit combination.

8. Sound Levels

Overall

■ **Floor Standing Type**

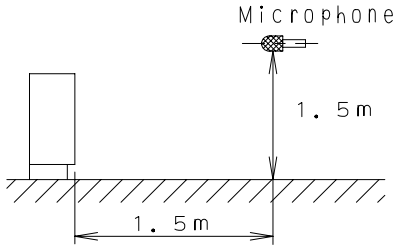

4D034528

■ **Concealed Floor Standing Type**

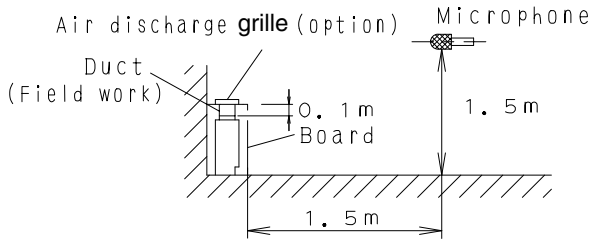

4D034534

dBA

Model	220V, 50Hz		240V, 50Hz		Model	220V, 50Hz		240V, 50Hz	
	H	L	H	L		H	L	H	L
FXLQ20MA FXLQ25MA FXLQ32MA	35	32	37	34	FXNQ20MA FXNQ25MA FXNQ32MA	35	32	37	34
FXLQ40MA	38	33	40	35	FXNQ40MA	38	33	40	35
FXLQ50MA	39	34	41	36	FXNQ50MA	39	34	41	36
FXLQ63MA	40	35	42	37	FXNQ63MA	40	35	42	37

Note:

1. The operating conditions are assumed to be standard (JIS conditions).
2. These operating values were obtained in a dead room (conversion values).
   Sound level will vary depending on a range of factors such as the construction (acoustic absorption coefficient) of the particular room in which the equipments installed.

Octave Band Level

○———○ 220V 50Hz
○- - - -○ 240V 50Hz

FXLQ20 · 25MAVE

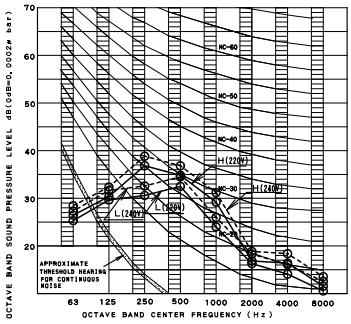

4D034528A

FXLQ32MAVE

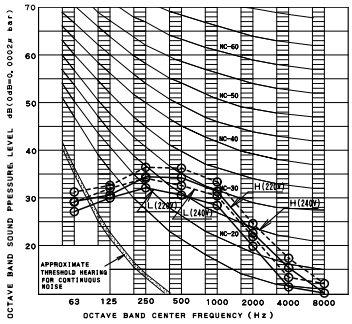

4D034564A

FXLQ40MAVE

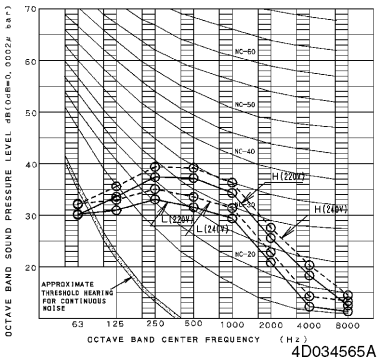

4D034565A

FXLQ50MAVE

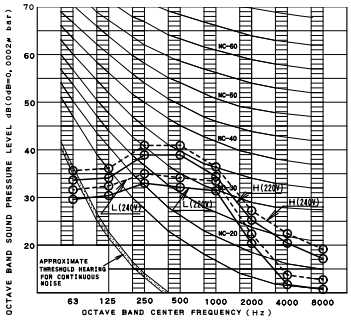

4D034566A

FXLQ63MAVE

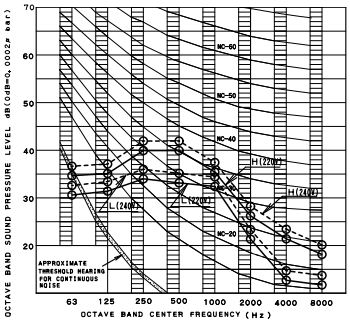

4D034567A

FXNQ20 · 25MAVE

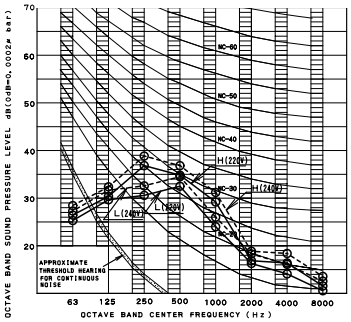

4D034534A

FXNQ32MAVE

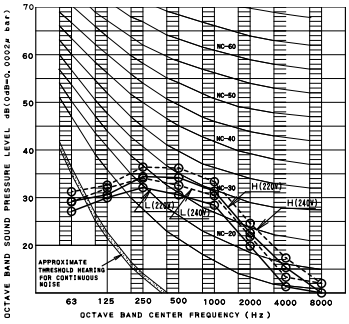

4D034535A

FXNQ40MAVE

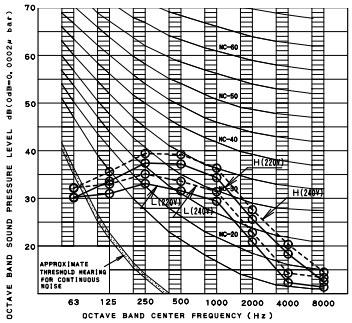

4D034536A

FXNQ50MAVE

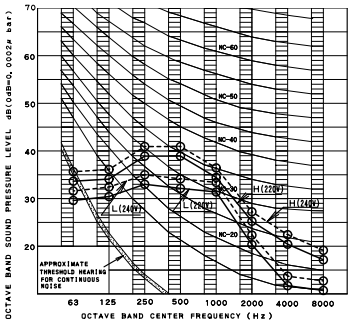

4D034537A

FXNQ63MAVE

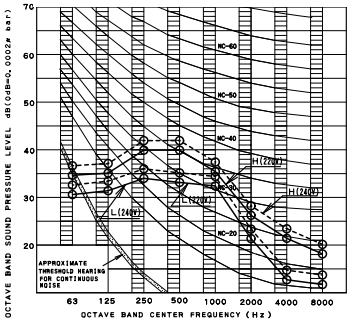

4D034538A

9. Installation

Installation Example

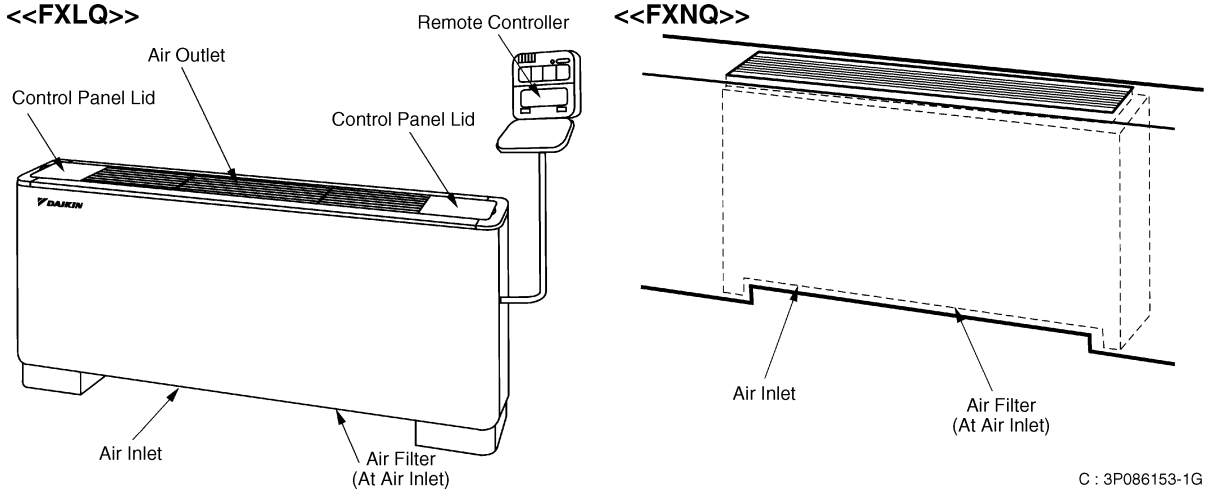

Service Space

(1) Select an installation site where the following conditions are satisfied and that meets with your customer's approval.

- Where the floor is strong enough to dear the indoor unit weight.
- Where the floor is not significantly inclined.
- Where nothing blocks the air passage.
- Where condensate can be properly drained.
- Where sufficient clearance for installation and maintenance can be ensured.
- Where optimum air distribution can be ensured.
- Where there is no risk of flammable gas leakage.
- Where piping between indoor and outdoor units is possible within the allowable limit. (Refer to the installation manual of the outdoor unit.)

⚠ CAUTION

- Install the indoor and outdoor units, power supply wiring and connecting wires at least 1 meter away from televisions or radios in order to prevent image interference or noise.
  (Depending on the radio waves, a distance of 1 meter may not be sufficient enough to eliminate the noise.)

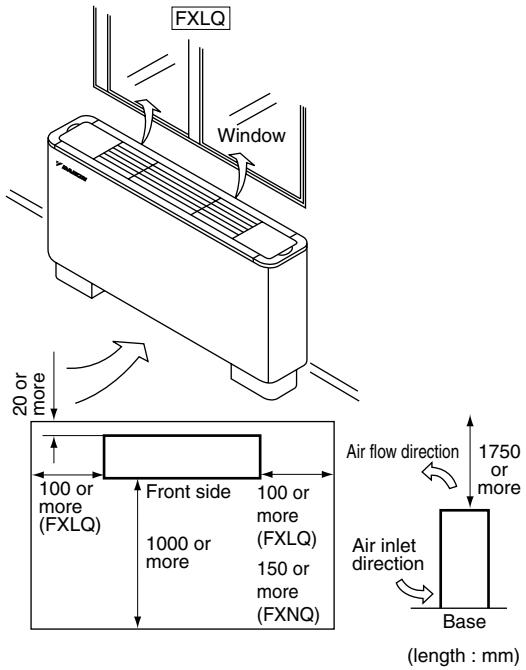

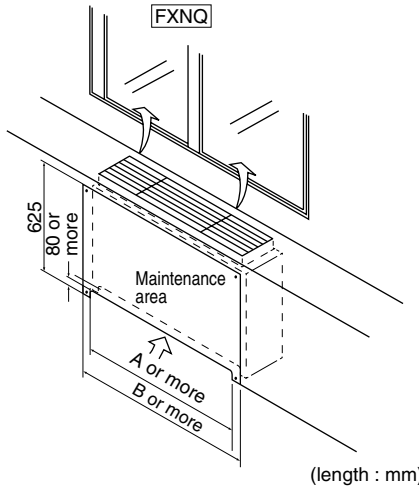

(IMPORTANT) Leave sufficient clearance for air inlet and maintenance.

Model		A (mm)	B (mm)
FXLQ20 · 25MAVE	FXNQ20 · 25MAVE	570	1030
FXLQ32 · 40MAVE	FXNQ32 · 40MAVE	710	1170
FXLQ50 · 63MAVE	FXNQ50 · 63MAVE	990	1450

C : 3P086154-2K

Center of Gravity

FXLQ

Unit (mm)

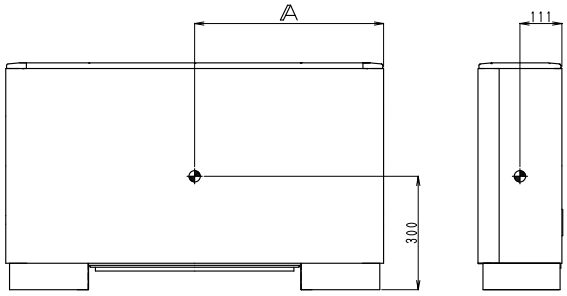

	A
FXLQ20•25MAVE	500
FXLQ32•40MAVE	570
FXLQ50•63MAVE	710

C : 4D034527B

FXNQ

Unit (mm)

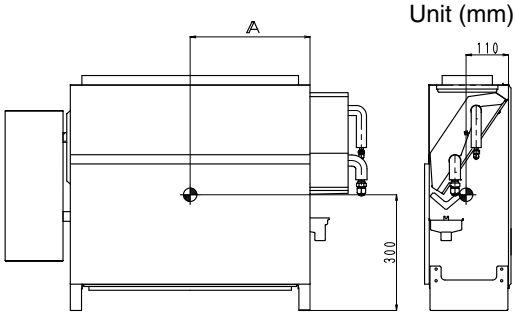

	A
FXNQ20•25MAVE	395
FXNQ32•40MAVE	465
FXNQ50•63MAVE	505

C : 4D034533A

Bolt Pitch

(1) Positioning of holes for fastening to the wall

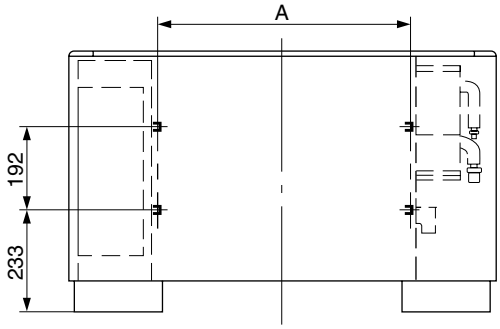

Model	A (mm)
FXNQ20 · 25MAVE	590
FXNQ32 · 40MAVE	730
FXNQ50 · 63MAVE	1010

(2) How to open / close the front panel

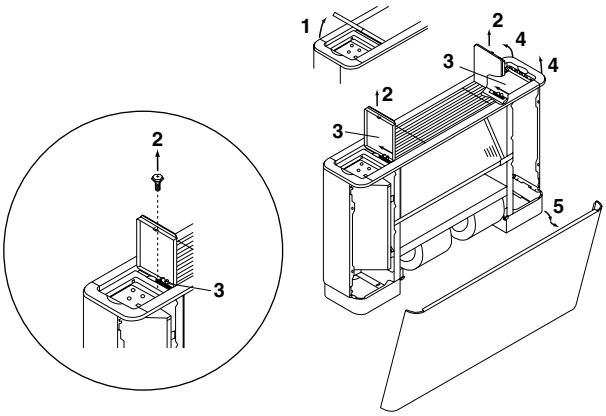

1. Open the lid of control panel (both left and right)
2. Remove screws (both left and right) that lock the knobs in position.
3. Push the knobs (both left and right) to the rear.
4. Lift the front of the top plate.
5. Lower the front panel towards the front of the unit.

- To close, perform the procedure in opposite order. Pull towards the front unit the knob snaps in place.

C : 3P086154-2K

Drain Piping Work

《**Rig the drain pipe as shown below and take measures against condensation. Improperly rigged piping could lead to leaks and eventually wet furniture and belongings.**》

(1) Carry out the drain piping.

Connect the drain hose (1) using the attached hose and parts, as shown in the right drawing.

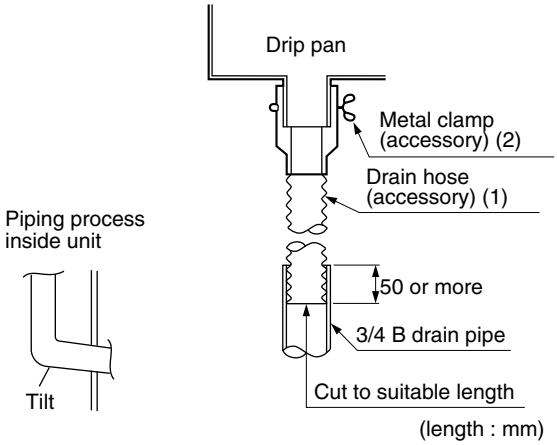

- If converging multiple drain pipes, install according to the procedure shown below.

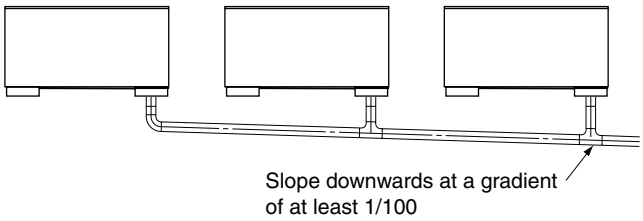

Select converging drain pipes whose gauge is suitable for the operating capacity of the unit.

(2) After piping work is finished, check drainage flows smoothly.
   - Add approximately 1 liter of water slowly from the air outlet and check drainage flow.

(3) Be sure to insulate all indoor pipes.

CAUTION

- Drain piping connections
  Do not connect the drain piping directly to sewage pipes that smell of ammonia. The ammonia in the sewage might enter the indoor unit through the drain pipes and corrode the heat exchanger.
- Keep in mind that it will become the cause of getting drain pipe blocked if water collects on drain pipe.

C : 3P086154-2K

10

10. Accessories

Standard Accessories

FXLQ20~63MA
FXNQ20~63MA

Name	Drain hose	Insulation for fitting	Sealing pad	Clamp	Leveling	
Quantity	1 set	1 each.	1 pc.	8 pcs.	4 pcs.	
Shape	Hose × 1 Metal clamp × 1 (1) (2)	(3)For gas pipe (4)For liquid pipe	(5)	(6)	(7)	[Other] • Operation manual • Installation manual

C : 3P086154-2K

Optional Accessories (For Unit)

No.	Type / Item	FXLQ20MA FXNQ20MA	FXLQ25MA FXNQ25MA	FXLQ32MA FXNQ32MA	FXLQ40MA FXNQ40MA	FXLQ50MA FXNQ50MA	FXLQ63MA FXNQ63MA
1	Long life replacement filter	KAFJ361K28		KAFJ361K45		KAFJ361K71	

C : 4D034574B

Optional Accessories (For Controls) : Refer to P.561

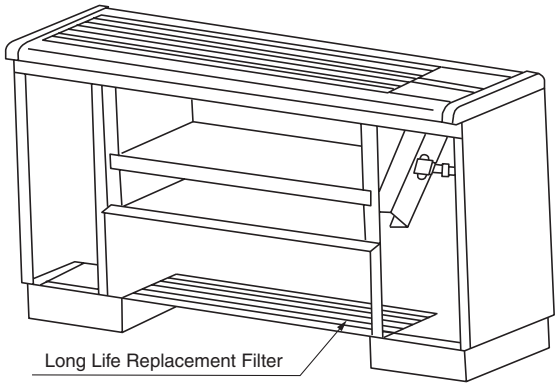

(V0683)

FXUQ-MA
Ceiling Suspended Cassette Type (Connection Unit Series)

1. Features 302
2. Specifications 303
3. Dimensions 305
4. Piping Diagrams 308
5. Wiring Diagrams 309
6. Electric Characteristics 311
7. Capacity Tables 312
   7.1 Cooling Capacity 312
8. Air Velocity and Temperature Distributions (Reference Data) 313
9. Sound Levels 315
10. Installation 316
   10.1 Indoor Units 316
   10.2 Connecting Units 321
11. Accessories 331

1. Features

Flexibility in installation location

Because the installation location, air flow direction and air flow rate can be selected according to the shape, lighting, and interior design of a room, the Ceiling Suspended Cassette Type air conditioner will create a comfortable environment throughout the room. This is a completely new air conditioning system that produces the comfort level of a four-way air flow, ceiling-mounted cassette type air conditioner with the ease of a ceiling-suspended unit.

Development back ground of FXUQ-MA

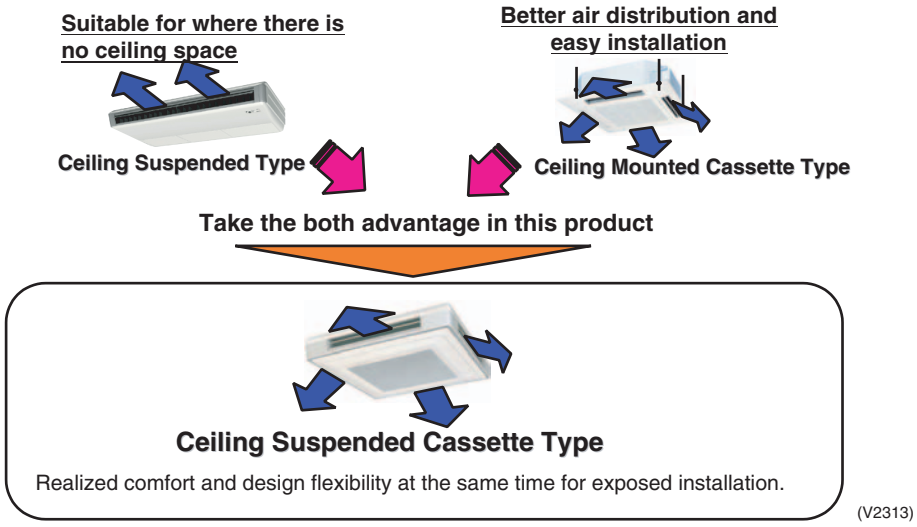

Flexible Design

- Daikin unique cassette
- Low Silhouette design:
  71 Type - 165mm thickness
  (Current Multi Flow Cassette:338mm)
- Aesthetically pleasing design
- High ceiling up 3.5m
- Flexible air distribution by control of direction and volume

Easy Installation

- Flexible piping installation (3 directions)
- Ceiling space not required

Easy Maintenance

- Long life filter (standard accessories)
- Drain pump(standard accessories)

<Variable discharge direction and air volume>

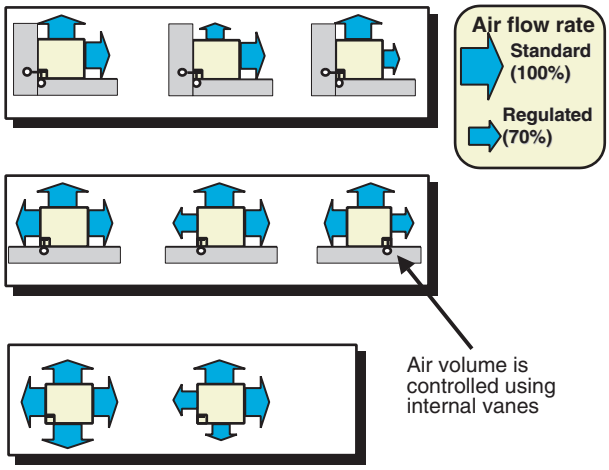

2. Specifications

Ceiling Suspended Cassette Type

Model		Indoor Unit		FXUQ71MAV1	FXUQ100MAV1	FXUQ125MAV1
		Connection Unit		BEVQ71MAVE	BEVQ100MAVE	BEVQ125MAVE
★1 Cooling Capacity (19.5°CWB)			kcal/h	7,100	10,000	12,500
			Btu/h	28,300	39,600	49,500
			kW	8.3	11.6	14.5
★2 Cooling Capacity (19.0°CWB)			kW	8.0	11.2	14.0
Casing Color				White (10Y9/0.5)	White (10Y9/0.5)	White (10Y9/0.5)
Dimensions: (H×W×D)			mm	165×895×895	230×895×895	230×895×895
Coil (Cross Fin Coil)	Rows×Stages×Fin Pitch		mm	3×6×1.5	3×8×1.5	3×8×1.5
	Face Area		m²	0.265	0.353	0.353
Fan	Model			QTS48A10M	QTS50B15M	QTS50B15M
	Type			Turbo Fan	Turbo Fan	Turbo Fan
	Motor Output × Number of Units		W	45×1	90×1	90×1
	Air Flow Rate (H/L)		m³/min	19/14	29/21	32/23
			cfm	671/494	1,024/741	1,130/812
	Drive			Direct Drive	Direct Drive	Direct Drive
Temperature Control				Microprocessor Thermostat for Cooling and Heating	Microprocessor Thermostat for Cooling and Heating	Microprocessor Thermostat for Cooling and Heating
Sound Absorbing Thermal Insulation Material				Heat Resistant Foamed Polyethylene, Regular Foamed Polyethylene	Heat Resistant Foamed Polyethylene, Regular Foamed Polyethylene	Heat Resistant Foamed Polyethylene, Regular Foamed Polyethylene
Piping Connections	Liquid Pipes		mm	ϕ9.5 (Flare Connection)	ϕ9.5 (Flare Connection)	ϕ9.5 (Flare Connection)
	Gas Pipes		mm	ϕ15.9 (Flare Connection)	ϕ15.9 (Flare Connection)	ϕ15.9 (Flare Connection)
	Drain Pipe		mm	VP20 (External Dia. 26 Internal Dia. 20)	VP20 (External Dia. 26 Internal Dia. 20)	VP20 (External Dia. 26 Internal Dia. 20)
Machine Weight			kg	25	31	31
★4 Sound Level (H/L) (230V)			dBA	40/35	43/38	44/39
Safety Devices				Thermal Protector for Fan Motor	Thermal Protector for Fan Motor	Thermal Protector for Fan Motor
Standard Accessories				Operation Manual, Installation Manual, Drain Hose, Clamp Metal, Insulation for Fitting, Sealing Pads, Clamps, Screws, Washers, Holding Plate.	Operation Manual, Installation Manual, Drain Hose, Clamp Metal, Insulation for Fitting, Sealing Pads, Clamps, Screws, Washers, Holding Plate.	Operation Manual, Installation Manual, Drain Hose, Clamp Metal, Insulation for Fitting, Sealing Pads, Clamps, Screws, Washers, Holding Plate.
Drawing No.				C : 4D045395A		

Notes:

★1 Indoor temp. : 27°CDB, 19.5°CWB / outdoor temp.: 35°CDB / Equivalent piping length: 7.5m, level difference: 0m.
★2 Indoor temp. : 27°CDB, 19.0°CWB / outdoor temp.: 35°CDB / Equivalent piping length: 7.5m, level difference: 0m.
3 Capacities are net, including a deduction for cooling (an additional for heating) for indoor fan motor heat.
★4 Anechoic chamber conversion value, measured at a point 1.5m downward from the unit center. These values are normally somewhat higher during actual operation as a result of ambient conditions.
5 Refer to page 311 for Fan Motor Input.

Conversion Formulae
kcal/h=kW×860 Btu/h=kW×3412 cfm=m³/min×35.3

11

BEV Units

Model				BEVQ71MAVE	BEVQ100MAVE	BEVQ125MAVE
Power Supply				1 Phase 50Hz 220~240V	1 Phase 50Hz 220~240V	1 Phase 50Hz 220~240V
Casing				Galvanized Steel Plate	Galvanized Steel Plate	Galvanized Steel Plate
Dimensions: (HxWxD)			mm	100×350×225	100×350×225	100×350×225
Sound Absorbing Thermal Insulation Material				Flame and Heat Resistant Foamed Polyethylene	Flame and Heat Resistant Foamed Polyethylene	Flame and Heat Resistant Foamed Polyethylene
Piping Connection	Indoor Unit	Liquid Pipes		9.5mm (Flare Connection)	9.5mm (Flare Connection)	9.5mm (Flare Connection)
		Gas Pipes		15.9mm (Flare Connection)	15.9mm (Flare Connection)	15.9mm (Flare Connection)
	Outdoor Unit	Liquid Pipes		9.5mm (Flare Connection)	9.5mm (Flare Connection)	9.5mm (Flare Connection)
		Suction Gas Pipes		15.9mm (Flare Connection)	15.9mm (Flare Connection)	15.9mm (Flare Connection)
Machine Weight (Mass)			kg	3.0	3.0	3.5
Standard Accessories				Installation manual, Gas piping connections, Insulation for fitting, Sealing material, Clamps	Installation manual, Gas piping connections, Insulation for fitting, Sealing material, Clamps	Installation manual, Gas piping connections, Insulation for fitting, Sealing material, Clamps
Drawing No.				4D045387A	4D045387A	4D045388A

Connection Example

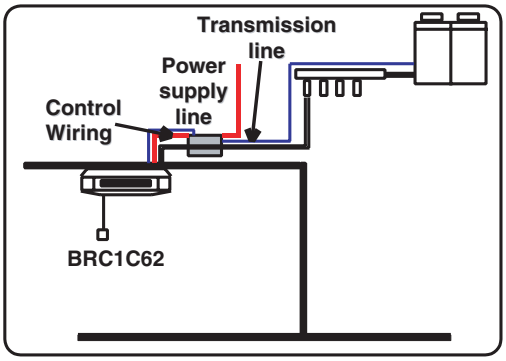

1. Wiring Work
- The connecting line between SkyAir Indoor Unit – BEV Unit : 3 cores…like a Transmission Line
- BEV Unit's power supply line; Single phase 2 line…like a VRV Indoor unit
- BEV Unit – other **VRV** indoor unit or outdoor unit – : 2 cores…DIII network wiring (super wiring)

2. Piping work
SkyAir side,Outdoor Unit Side,They are both flare connection.

Consideration matter

- When connecting centralized-control device, it is necessary to **install an interface adaptor for SkyAir series in an indoor unit.**

- Distance between indoor unit and –BEV unit must be **within 5m**.

(V2315)

Outline figure

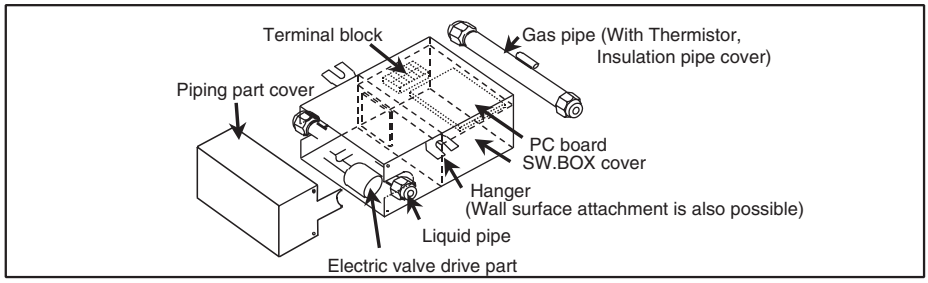

Installation pattern / maintenance

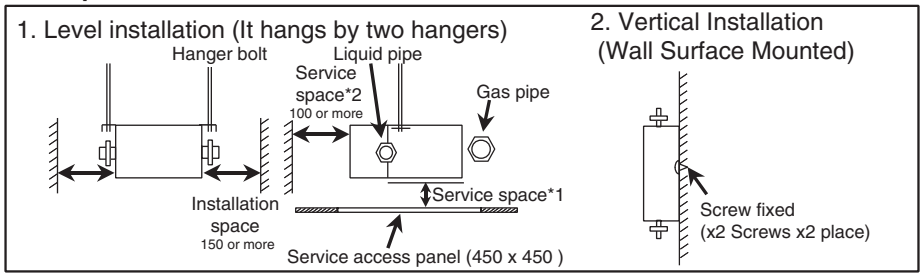

*1; Service space for switch box.
(Service access panel is required for the bottom side. When there is nothing, 350 or more spaces are required.)
*2; For electric valve drive part's maintenance. (a control box is removed)

(V2316)

3. Dimensions

FXUQ71MAV1

Unit (mm)

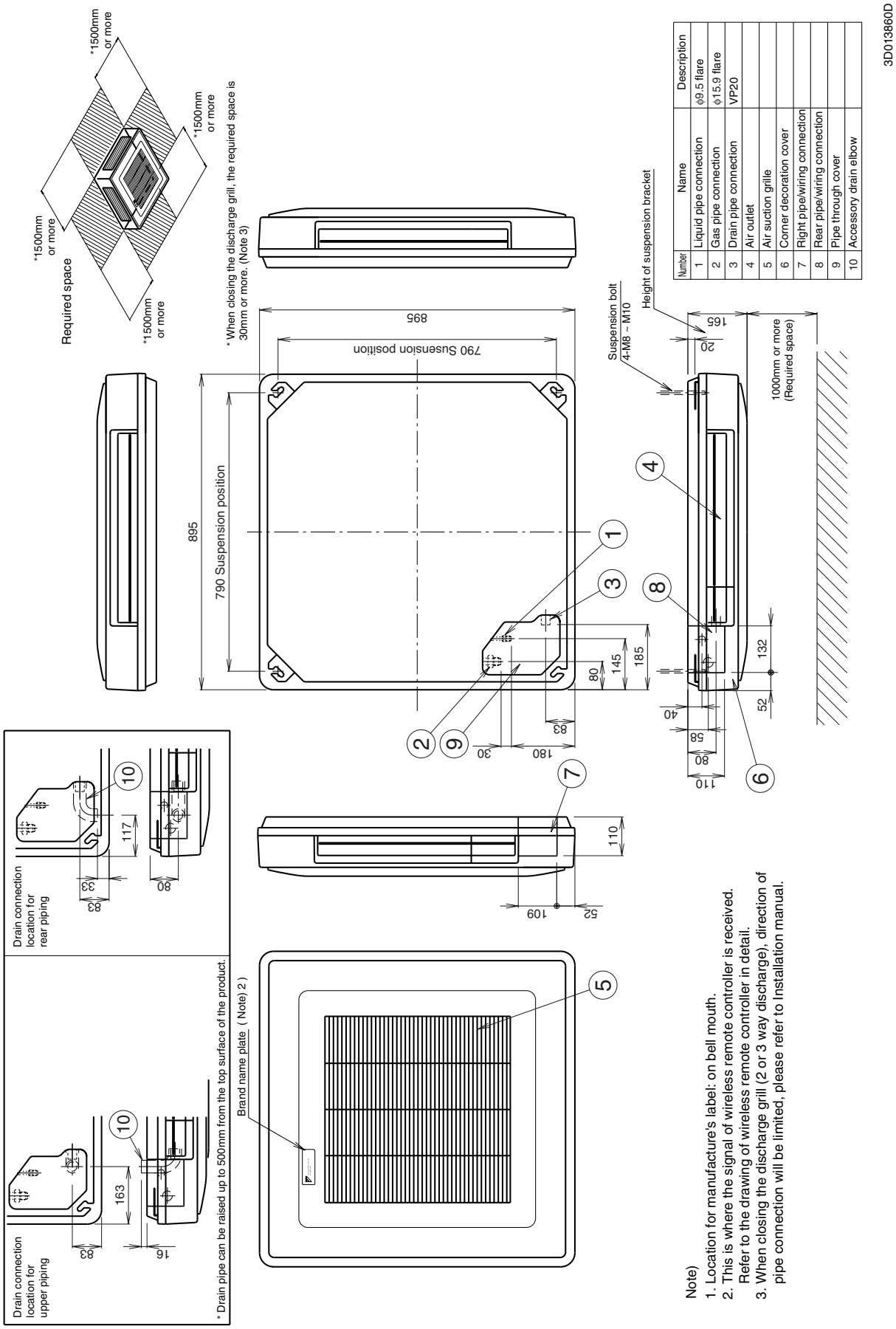

Number	Name	Description
1	Liquid pipe connection	φ9.5 flare
2	Gas pipe connection	φ15.9 flare
3	Drain pipe connection	VP20
4	Air outlet	
5	Air suction grille	
6	Corner decoration cover	
7	Right pipe/wiring connection	
8	Rear pipe/wiring connection	
9	Pipe through cover	
10	Accessory drain elbow	

Note)
1. Location for manufacture's label: on bell mouth.
2. This is where the signal of wireless remote controller is received. Refer to the drawing of wireless remote controller in detail.
3. When closing the discharge grill (2 or 3 way discharge), direction of pipe connection will be limited, please refer to Installation manual.

11

FXUQ100MAV1
FXUQ125MAV1

Unit (mm)

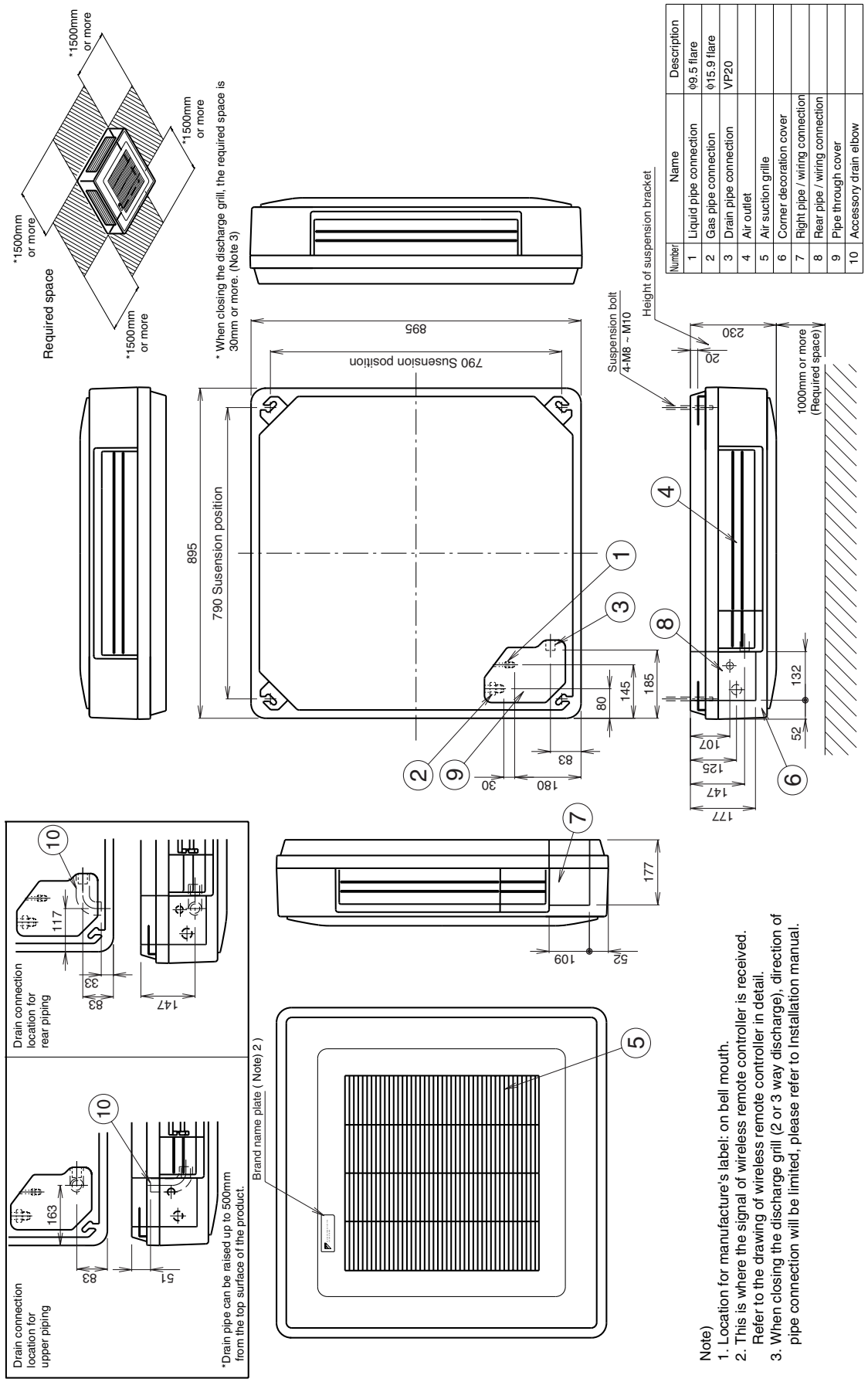

Number	Name	Description
1	Liquid pipe connection	ϕ9.5 flare
2	Gas pipe connection	ϕ15.9 flare
3	Drain pipe connection	VP20
4	Air outlet	
5	Air suction grille	
6	Corner decoration cover	
7	Right pipe / wiring connection	
8	Rear pipe / wiring connection	
9	Pipe through cover	
10	Accessory drain elbow	

Note)
1. Location for manufacture's label: on bell mouth.
2. This is where the signal of wireless remote controller is received. Refer to the drawing of wireless remote controller in detail.
3. When closing the discharge grill (2 or 3 way discharge), direction of pipe connection will be limited, please refer to Installation manual.

BEVQ71MA / 100MA / 125MAVE (When installing the unit on wall)

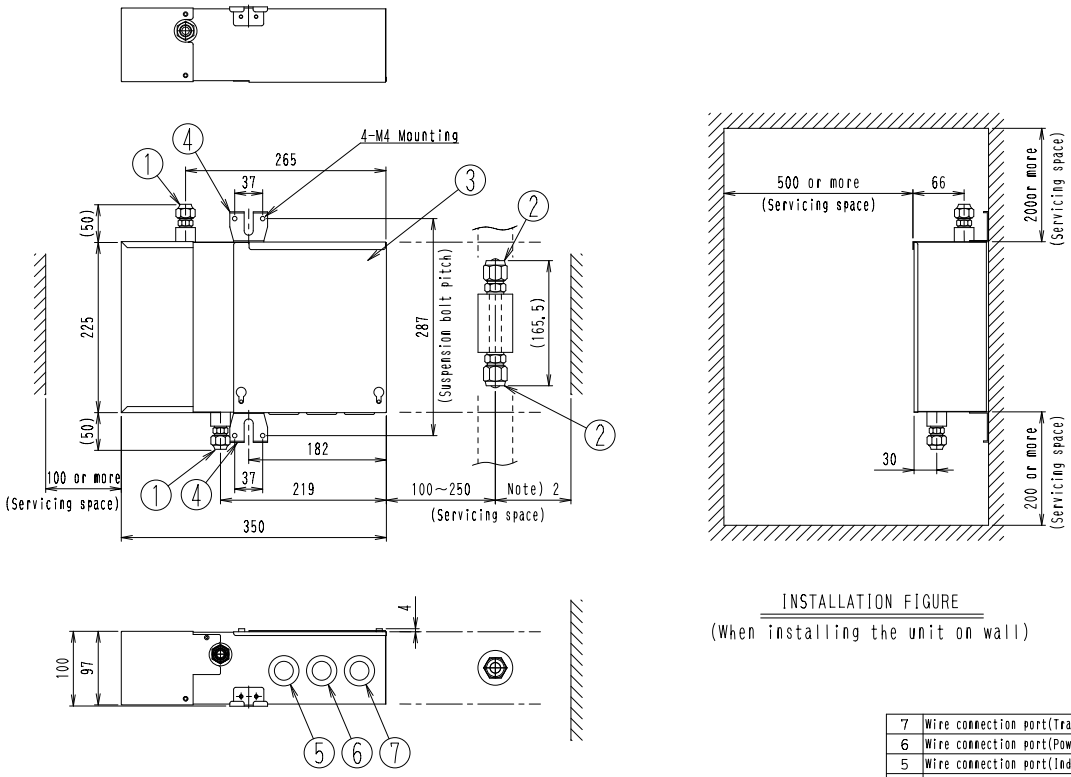

Notes)1. Be sure to install wire connection port to be sure to become downward.
2. Be sure to secure the space which can be the thinghtening work of the flare nut.

Number	Part name	Description
7	Wire connection port(Transmission(VRV)・Gas pipe thermistor)	
6	Wire connection port(Power supply・Ground)	
5	Wire connection port(Indoor unit connection)	
4	Suspension bolt	
3	Electric parts box	
2	Gas pipe connection port	ϕ15.9mm flare connection
1	Liquid pipe connection port	ϕ 9.5mm flare connection

C: 3D045389

11

BEVQ71MA / 100MA / 125MAVE (When hanging the unit from the ceiling)

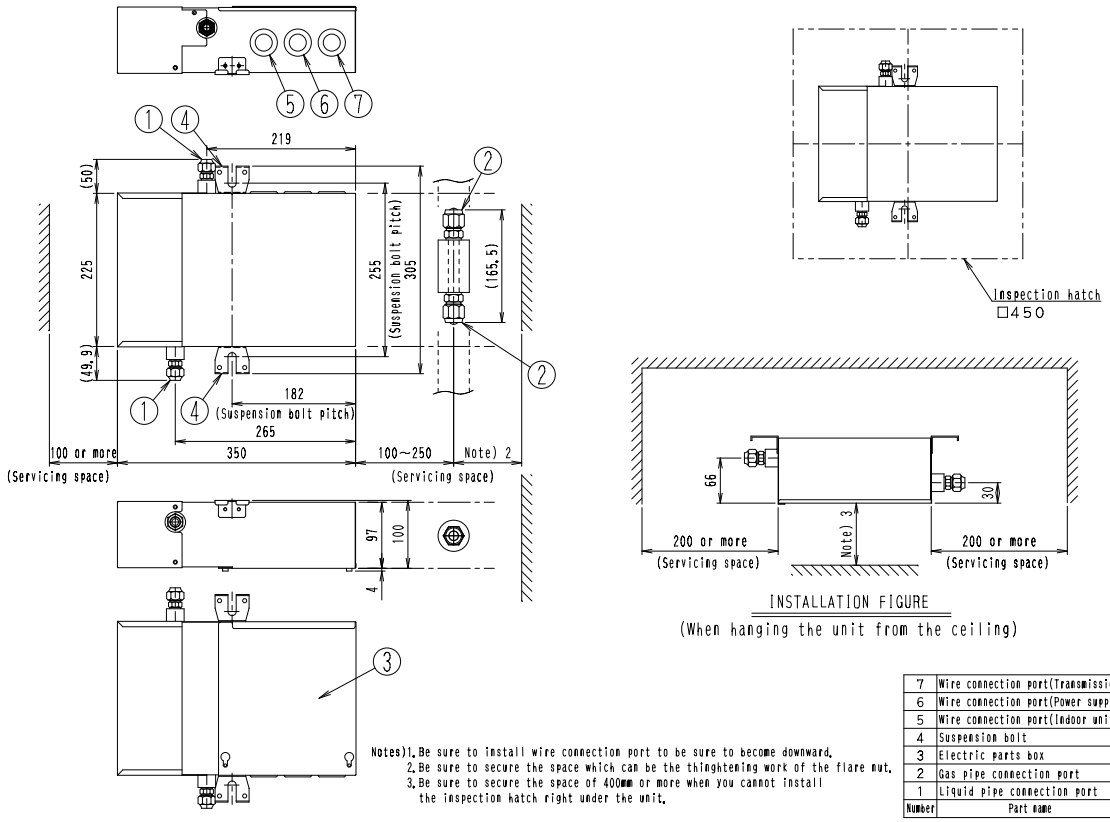

Notes)1. Be sure to install wire connection port to be sure to become downward.
2. Be sure to secure the space which can be the thinghtening work of the flare nut.
3. Be sure to secure the space of 400mm or more when you cannot install the inspection hatch right under the unit.

Number	Part name	Description
7	Wire connection port(Transmission(VRV)・Gas pipe thermistor)	
6	Wire connection port(Power supply・Ground)	
5	Wire connection port(Indoor unit connection)	
4	Suspension bolt	
3	Electric parts box	
2	Gas pipe connection port	ϕ15.9mm flare connection
1	Liquid pipe connection port	ϕ 9.5mm flare connection

C: 3D045390

4. Piping Diagrams

Indoor unit

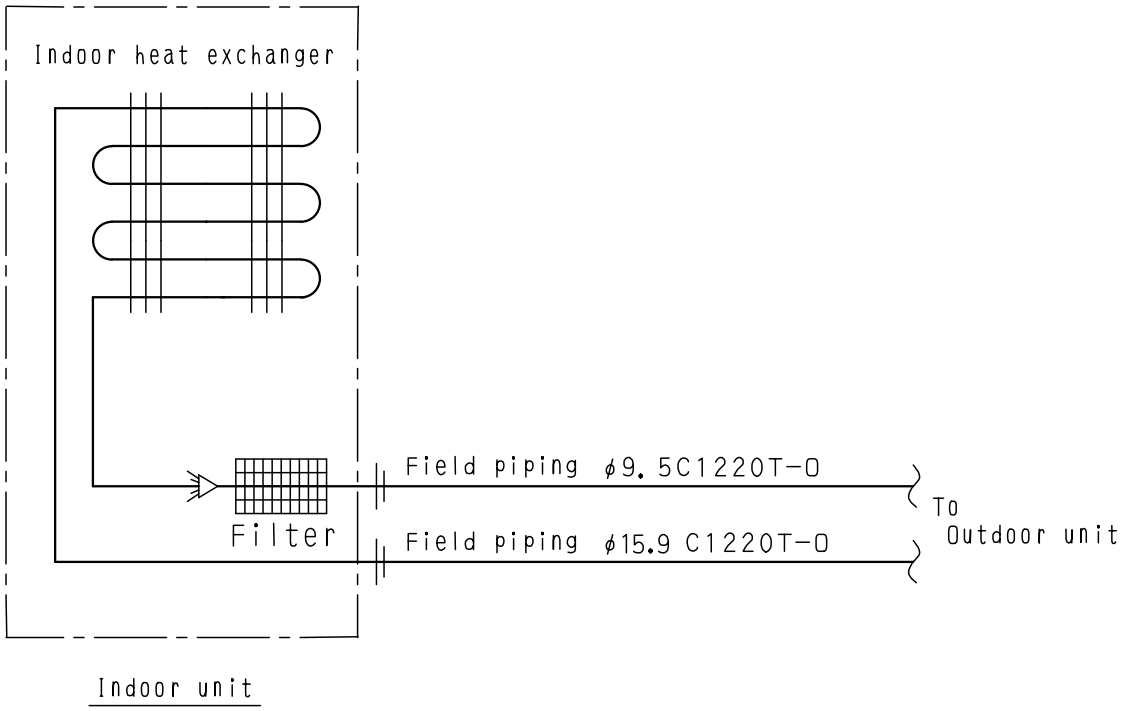

C: 4D037995F

Connection Unit

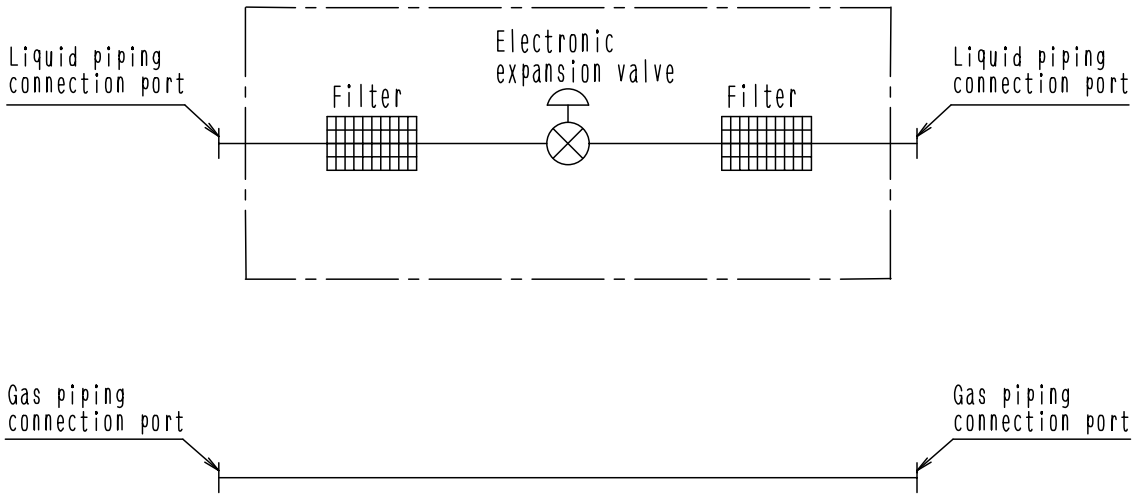

4D034127B

5. Wiring Diagrams

FXUQ71MAV1 / FXUQ100MAV1 / FXUQ125MAV1

3D044973A

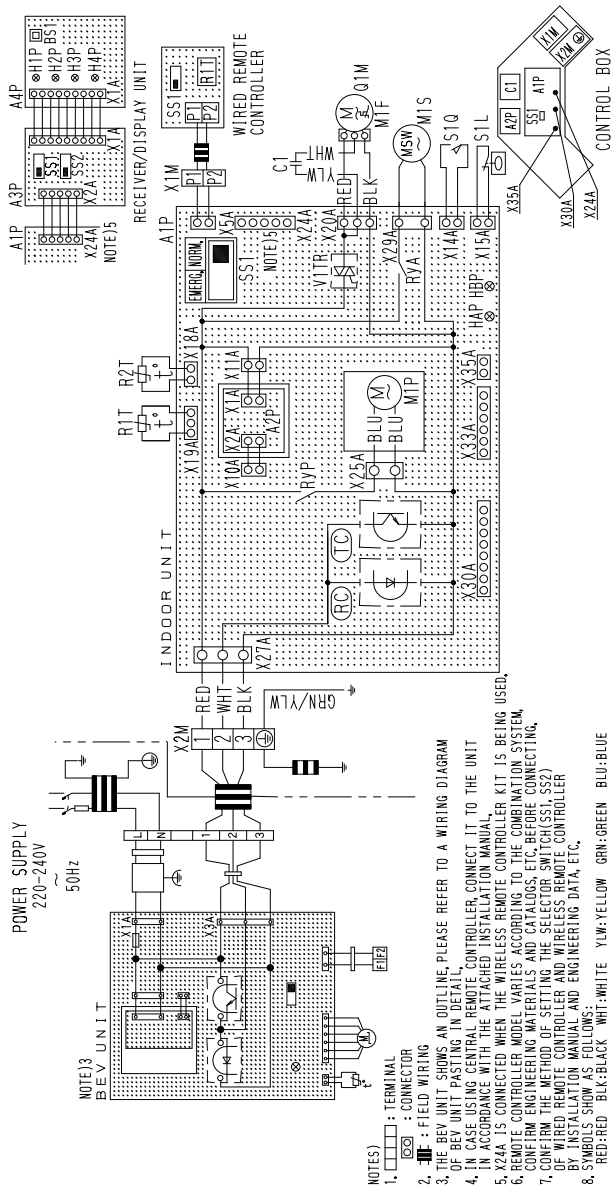

INDOOR UNIT		WIRED REMOTE CONTROLLER	
A1P	PRINTED CIRCUIT BOARD	R1T	THERMISTOR(AIR)
A2P	PRINTED CIRCUIT BOARD (TRANSFORMER 220~240V/16V)	SS1	SELECTOR SWITCH(MAIN/SUB) RECEIVER/DISPLAY UNIT (ATTACHED TO WIRLESS REMOTE CONTROLLER)
C1	CAPACITOR(M1F)		
HAP	LIGHT EMITTING DIODE (SERVICE MONITOR GREEN)	A3P	PRINTED CIRCUIT BOARD
		A4P	PRINTED CIRCUIT BOARD
HBP	LIGHT EMITTING DIODE (SERVICE MONITOR GREEN)	BS1	PUSH BUTTON(ON/OFF)
		H1P	LIGHT EMITTING DIODE (ON-RED)
M1S	MOTOR(SWING FLAP)		
M1F	MOTOR(INDOOR FAN)	H2P	LIGHT EMITTING DIODE (TIMER-GREEN)
M1P	MOTOR(DRAIN PUMP)		
Q1M	THERMO SWITCH(M1F EMBEDDED)	H3P	LIGHT EMITTING DIODE (FILTER SIGN-RED)
R1T	THERMISTOR(AIR)		
R2T	THERMISTOR(COIL)	H4P	LIGHT EMITTING DIODE (DEFROST-ORANGE)
RYA	MAGNETIC RELAY(M1A)		
RYP	MAGNETIC RELAY(M1P)	SS1	SELECTOR SWITCH(MAIN/SUB)
S1Q	LIMIT SWITCH(SWING FLAP)	SS2	SELECTOR SWITCH (WIRELESS ADDRESS SET)
S1L	FLOAT SWITCH		
SS1	SELECTOR SWITCH(EMERGENCY)		CONNECTOR FOR OPTIONAL PARTS
V1TR	PHASE CONTROL CIRCUIT	X24A	CONNECTOR(WIRELESS REMOTE CONTROLLER)
X1M	TERMINAL STRIP	X30A	CONNECTOR(INTERFACE ADAPTOR FOR SKY AIR SERIES)
X2M	TERMINAL STRIP		
(RC)	SIGNAL RECEIVER	X35A	CONNECTOR(GROUP CONTROL ADAPTOR)
(TC)	SIGNAL TRANSMISSION CIRCUIT		

11

BEVQ71MAVE / BEVQ100MAVE / BEVQ125MAVE

BEV UNIT	
A1P	PRINTED CIRCUIT BOARD ASSY
A2P	POWER SUPPLY PRINTED CIRCUIT BOARD ASSY(220-240V/16V)
F1U	FUSE(Ⓑ, 10A, 250V)
HAP	LIGHT EMITTING DIODE (SERVICE MONITOR-GRREN)
R3T	THERMISTOR(GAS)
SS1	SELECTOR SWITCH(M/S)
X1M	TERMINAL STRIP(POWER)
X2M	TERMINAL STRIP(TRANSMISSION)
Y1E	ELECTRONIC EXPANSION VALVE
Z1C・Z2C Z3C・Z4F	NOISE FILTER

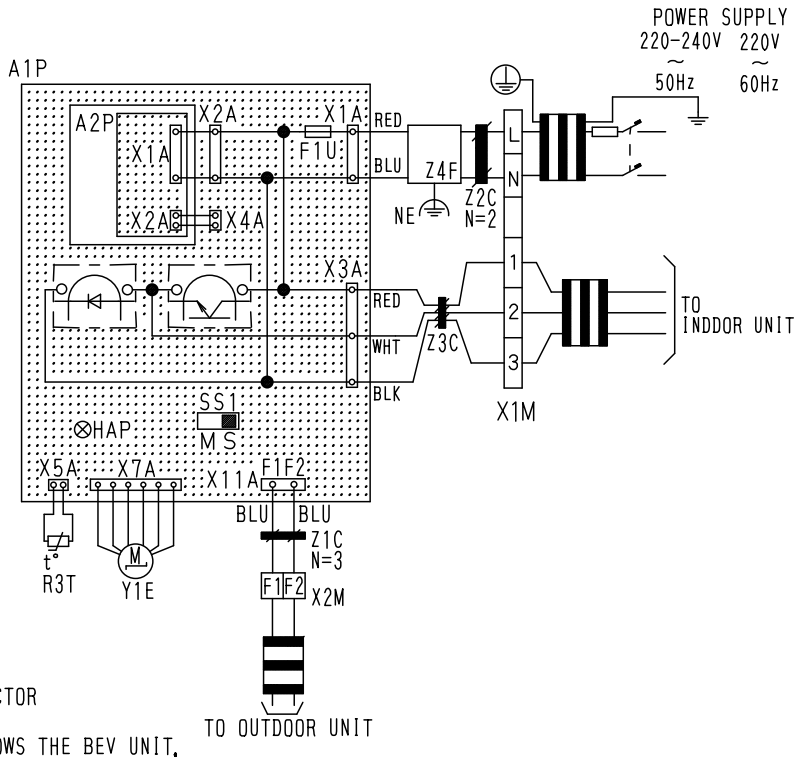

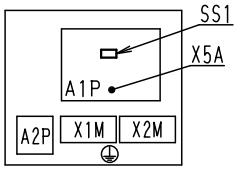

注）1. ▭ : TERMINAL ▭ :CONNECTOR
2. ▬ :FIELD WIRING
3. THIS WIRING DIAGRAM ONLY SHOWS THE BEV UNIT.
SEE THE WIRING DIAGRAMS AND INSTALLATION MANUALS FOR THE WIRING AND SETTINGS FOR THE INDOOR , OUTDOOR , AND BS UNITS.
4. SEE THE INDOOR UNIT'S WIRING DIAGRAM WHEN INSTALLING OPTIONAL PARTS FOR THE INDOOR UNIT.
5. ONLY ONE INDOOR UNIT MAY BE CONNECTED TO THE BEV UNIT.
SEE THE INDOOR UNIT'S WIRING DIAGRAM FOR WHEN CONNECTING THE REMOTE CONTROL.
6. ALWAYS USE THE SKY AIR CONNECTION ADAPTER FOR THE INDOOR UNIT WHEN USING A CENTRAL CONTROL UNIT.
REFER TO THE MANUAL ATTACHED THE UNIT WHEN CONNECTING.
7. COOL/HEAT CHANGEOVER OF INDOOR UNITS CONNECTED TO BEV UNIT CANNOT BE CARRIED OUT UNLESS THEY ARE CONNECTED TO BS UNIT.
IN CASE OF A SYSTEM WITH BEV UNIT ONLY, COOL/HEAT SELECTOR IS REQUIRED.
8. SET THE SS1 TO " M " ONLY FOR THE BEV UNIT CONNECTED TO THE INDOOR UNIT WHICH IS TO HAVE COOL/HEAT SWITCHING CAPABILITY, WHEN CONNECTING THE BS UNIT.
THE " M/S " ON THE SS1 STANDS FOR " MAIN/SUB ".
THIS IS SET TO "S" WHEN SHIPPED FROM THE FACTORY.
9. CONNECT THE ATTACHED THERMISTOR TO THE R3T.
10. SYMBOLS SHOW AS FOLLOWS.
(BLU:BLUE RED:RED WHT:WHITE BLK:BLACK)

3D044901B

6. Electric Characteristics

Units				Power supply		IFM		Input(W)	
Model	Hz	Volts	Voltage range	MCA	MFA	KW	FLA	Cooling	Heating
BEVQ71M(A)VE + FXUQ71M(A)V1	50	220-240	MAX. 264 Min. 198	0.8	15	0.045	0.6	189	169
BEVQ100M(A)VE + FXUQ100M(A)V1				1.3	15	0.090	1.0	298	278
BEVQ125M(A)VE + FXUQ125M(A)V1									

Symbols:

MCA : Min. Circuit Amps (A)
MFA : Max. Fuse Amps (See note 5)
KW : Fan Motor Rated Output(KW)
FLA : Full Load Amps(A)
IFM : Indoor Fan Motor

Note:

1. Voltage range
   Units are suitable for use on electrical systems where voltage supplied to unit terminals is not below or above listed range limits.
2. Maximum allowable voltage unbalance between phases is 2%.
3. MCA/MFA
   MCA = 1.25 X FLA
   MFA ≦ 4 X FLA
   (Next lower standard fuse rating. Min. 15A)
4. Select wire size based on the MCA.
5. Instead of fuse, use Circuit Breaker.

C: 4D034128B

11

7. Capacity Tables

7.1 Cooling Capacity

FXUQ-MA [50Hz]

Cooling capacity

Unit Size	Outdoor air temp. °CDB	Indoor air temp.													
		14.0°CWB		16.0°CWB		18.0°CWB		19.0°CWB		20.0°CWB		22.0°CWB		24.0°CWB	
		20°CDB		23°CDB		26°CDB		27°CDB		28°CDB		30°CDB		32°CDB	
		TC	SC	TC	SC	TC	SC	TC	SC	TC	SC	TC	SC	TC	SC
71	10.0	5.4	4.8	6.4	5.2	7.5	5.8	8.0	6.0	8.5	6.0	9.6	6.2	10.5	6.3
	12.0	5.4	4.8	6.4	5.2	7.5	5.8	8.0	6.0	8.5	6.0	9.6	6.2	10.4	6.2
	14.0	5.4	4.8	6.4	5.2	7.5	5.8	8.0	6.0	8.5	6.0	9.6	6.2	10.3	6.2
	16.0	5.4	4.8	6.4	5.2	7.5	5.8	8.0	6.0	8.5	6.0	9.6	6.2	10.1	6.1
	18.0	5.4	4.8	6.4	5.2	7.5	5.8	8.0	6.0	8.5	6.0	9.6	6.2	10.0	6.0
	20.0	5.4	4.8	6.4	5.2	7.5	5.8	8.0	6.0	8.5	6.0	9.6	6.2	9.8	5.9
	21.0	5.4	4.8	6.4	5.2	7.5	5.8	8.0	6.0	8.5	6.0	9.6	6.2	9.8	5.9
	23.0	5.4	4.8	6.4	5.2	7.5	5.8	8.0	6.0	8.5	6.0	9.4	6.2	9.6	5.8
	25.0	5.4	4.8	6.4	5.2	7.5	5.8	8.0	6.0	8.5	6.0	9.3	6.1	9.5	5.7
	27.0	5.4	4.8	6.4	5.2	7.5	5.8	8.0	6.0	8.5	6.0	9.2	6.0	9.4	5.7
	29.0	5.4	4.8	6.4	5.2	7.5	5.8	8.0	6.0	8.5	6.0	9.0	5.9	9.2	5.7
	31.0	5.4	4.8	6.4	5.2	7.5	5.8	8.0	6.0	8.5	6.0	8.9	5.8	9.1	5.6
	33.0	5.4	4.8	6.4	5.2	7.5	5.8	8.0	6.0	8.5	6.0	8.7	5.8	8.9	5.6
	35.0	5.4	4.8	6.4	5.2	7.5	5.8	8.0	6.0	8.4	6.0	8.6	5.7	8.8	5.5
	37.0	5.4	4.8	6.4	5.2	7.5	5.8	8.0	5.9	8.3	6.0	8.5	5.8	8.7	5.4
	39.0	5.4	4.8	6.4	5.2	7.5	5.8	8.0	6.1	8.1	5.9	8.3	5.6	8.5	5.4
100	10.0	7.6	6.6	9.0	7.1	10.5	8.0	11.2	8.2	11.9	8.3	13.4	8.4	14.7	8.5
	12.0	7.6	6.6	9.0	7.1	10.5	8.0	11.2	8.2	11.9	8.3	13.4	8.4	14.5	8.4
	14.0	7.6	6.6	9.0	7.1	10.5	8.0	11.2	8.2	11.9	8.3	13.4	8.4	14.4	8.3
	16.0	7.6	6.6	9.0	7.1	10.5	8.0	11.2	8.2	11.9	8.3	13.4	8.4	14.2	8.2
	18.0	7.6	6.6	9.0	7.1	10.5	8.0	11.2	8.2	11.9	8.3	13.4	8.4	14.0	8.1
	20.0	7.6	6.6	9.0	7.1	10.5	8.0	11.2	8.2	11.9	8.3	13.4	8.4	13.8	8.0
	21.0	7.6	6.6	9.0	7.1	10.5	8.0	11.2	8.2	11.9	8.3	13.4	8.4	13.7	7.9
	23.0	7.6	6.6	9.0	7.1	10.5	8.0	11.2	8.2	11.9	8.3	13.2	8.2	13.5	7.8
	25.0	7.6	6.6	9.0	7.1	10.5	8.0	11.2	8.2	11.9	8.3	13.0	8.1	13.3	7.7
	27.0	7.6	6.6	9.0	7.1	10.5	8.0	11.2	8.2	11.9	8.3	12.8	8.0	13.1	7.7
	29.0	7.6	6.6	9.0	7.1	10.5	8.0	11.2	8.2	11.9	8.3	12.6	7.9	12.9	7.6
	31.0	7.6	6.6	9.0	7.1	10.5	8.0	11.2	8.2	11.9	8.3	12.4	7.9	12.7	7.6
	33.0	7.6	6.6	9.0	7.1	10.5	8.0	11.2	8.2	11.9	8.3	12.2	7.8	12.5	7.6
	35.0	7.6	6.6	9.0	7.1	10.5	8.0	11.2	8.2	11.8	8.3	12.1	7.7	12.3	7.4
	37.0	7.6	6.6	9.0	7.1	10.5	8.0	11.2	8.2	11.6	8.3	11.9	7.7	12.2	7.3
	39.0	7.6	6.6	9.0	7.1	10.5	8.0	11.2	8.2	11.4	8.2	11.7	7.6	12.0	7.3
125	10.0	9.5	8.0	11.3	9.0	13.1	9.9	14.0	10.4	14.9	10.6	16.8	10.7	18.4	10.8
	12.0	9.5	8.0	11.3	9.0	13.1	9.9	14.0	10.4	14.9	10.6	16.8	10.7	18.2	10.7
	14.0	9.5	8.0	11.3	9.0	13.1	9.9	14.0	10.4	14.9	10.6	16.8	10.7	18.0	10.5
	16.0	9.5	8.0	11.3	9.0	13.1	9.9	14.0	10.4	14.9	10.6	16.8	10.7	17.7	10.4
	18.0	9.5	8.0	11.3	9.0	13.1	9.9	14.0	10.4	14.9	10.6	16.8	10.7	17.5	10.2
	20.0	9.5	8.0	11.3	9.0	13.1	9.9	14.0	10.4	14.9	10.6	16.8	10.7	17.2	10.1
	21.0	9.5	8.0	11.3	9.0	13.1	9.9	14.0	10.4	14.9	10.6	16.8	10.7	17.1	10.0
	23.0	9.5	8.0	11.3	9.0	13.1	9.9	14.0	10.4	14.9	10.6	16.5	10.5	16.9	9.9
	25.0	9.5	8.0	11.3	9.0	13.1	9.9	14.0	10.4	14.9	10.6	16.3	10.4	16.6	9.9
	27.0	9.5	8.0	11.3	9.0	13.1	9.9	14.0	10.4	14.9	10.6	16.1	10.2	16.4	9.8
	29.0	9.5	8.0	11.3	9.0	13.1	9.9	14.0	10.4	14.9	10.6	15.8	10.1	16.2	9.7
	31.0	9.5	8.0	11.3	9.0	13.1	9.9	14.0	10.4	14.9	10.6	15.6	10.0	15.9	9.6
	33.0	9.5	8.0	11.3	9.0	13.1	9.9	14.0	10.4	14.9	10.6	15.3	9.9	15.7	9.6
	35.0	9.5	8.0	11.3	9.0	13.1	9.9	14.0	10.4	14.8	10.5	15.1	9.9	15.4	9.4
	37.0	9.5	8.0	11.3	9.0	13.1	9.9	14.0	10.4	14.5	10.5	14.9	9.8	15.2	9.4
	39.0	9.5	8.0	11.3	9.0	13.1	9.9	14.0	10.4	14.3	10.2	14.6	9.6	15.0	9.3

TC Total capacity ; kW
SC Sensible capacity ; kW

Refer to Outdoor Unit Capacity Tables : on page 411~, 470~, for the actual performance data of each indoor and outdoor unit combination.

8. Air Velocity and Temperature Distributions (Reference Data)

FXUQ71MA

COOLING・AIR VELOCITY DISTRIBUTION

4 WAY DISCHARGE AIR FLOW DIRECTION : HORIZONTAL

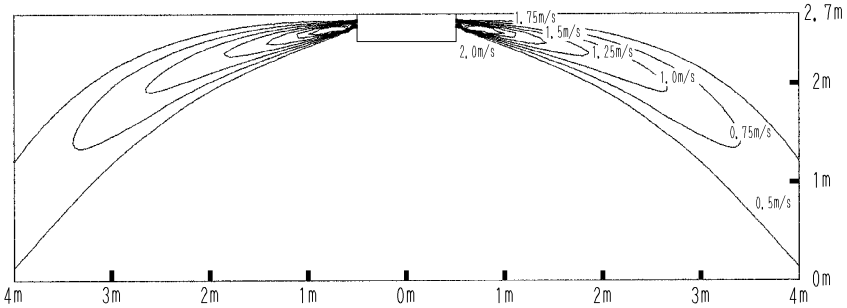

COOLING・AIR TEMPERATURE DISTRIBUTION

4 WAY DISCHARGE AIR FLOW DIRECTION : HORIZONTAL

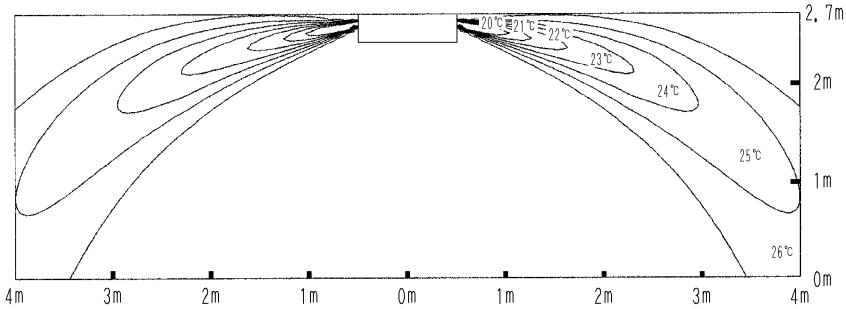

4D028396C

11

FXUQ100MA

COOLING・AIR VELOCITY DISTRIBUTION

4 WAY DISCHARGE AIR FLOW DIRECTION : HORIZONTAL

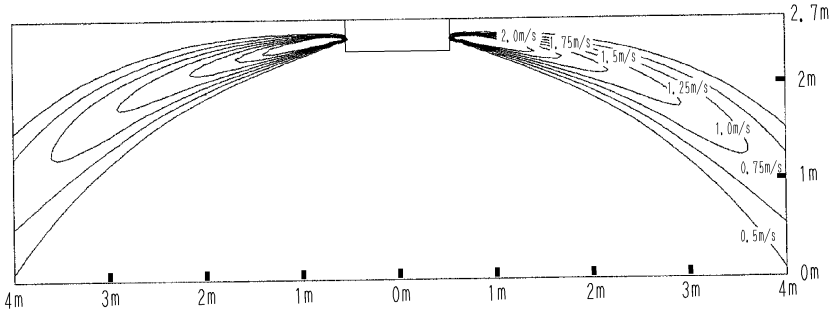

COOLING・AIR TEMPERATURE DISTRIBUTION

4 WAY DISCHARGE AIR FLOW DIRECTION : HORIZONTAL

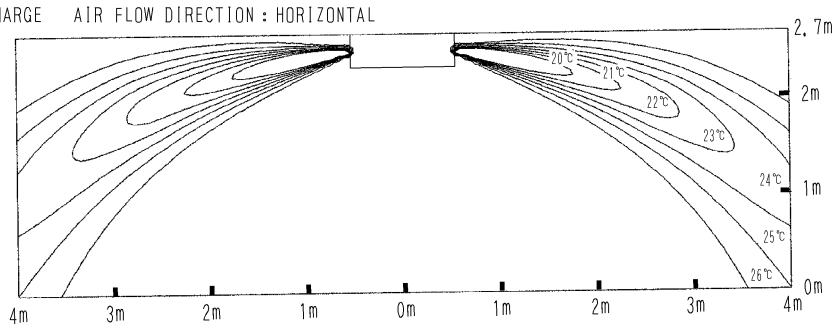

4D028397C

FXUQ125MA

COOLING・AIR VELOCITY DISTRIBUTION

4 WAY DISCHARGE AIR FLOW DIRECTION : HORIZONTAL

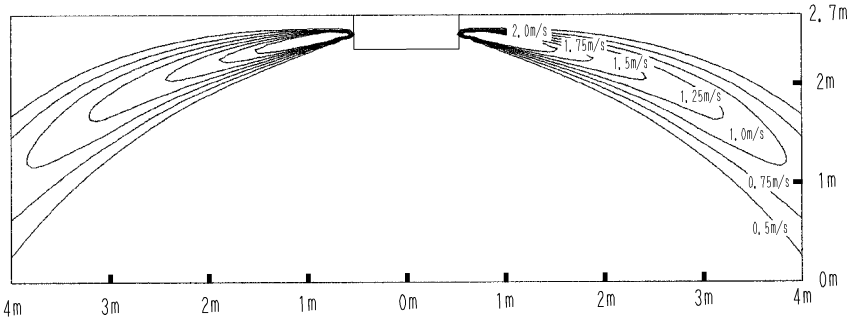

COOLING・AIR TEMPERATURE DISTRIBUTION

4 WAY DISCHARGE AIR FLOW DIRECTION : HORIZONTAL

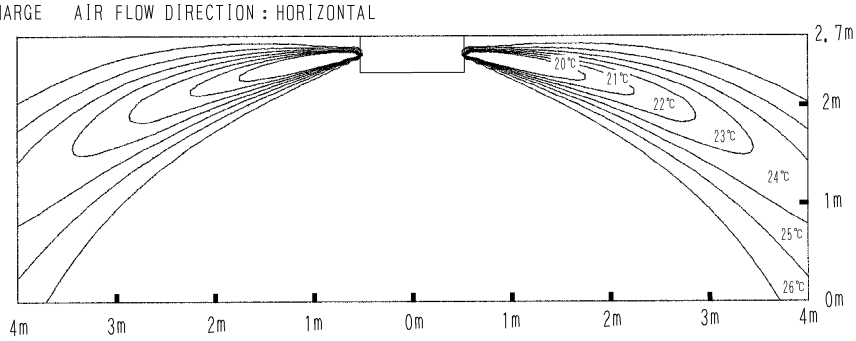

4D028398C

9. Sound Levels

Overall

■ **Ceiling Suspended Cassette Type**

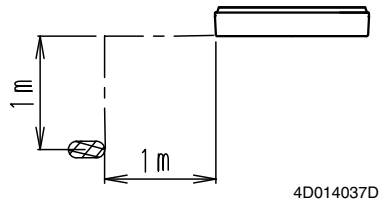

Notes:

1. The operating conditions are assumed to be standard (JIS conditions).
2. These operating values were obtained in a dead room (conversion values).
   Sound level will vary depending on a range of factors such as the construction (acoustic absorption coefficient) of the particular room in which the equipments installed.

dBA

Model	230V, 50Hz	
	H	L
FXUQ71MAV1	40	35
FXUQ100MAV1	43	38
FXUQ125MAV1	44	39

Octave Band Level

○——○ 230V 50Hz

FXUQ71MAV1

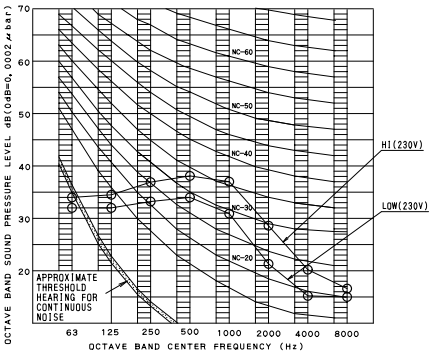

4D014037D

FXUQ100MAV1

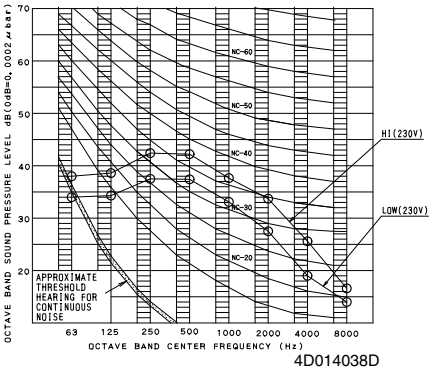

4D014038D

FXUQ125MAV1

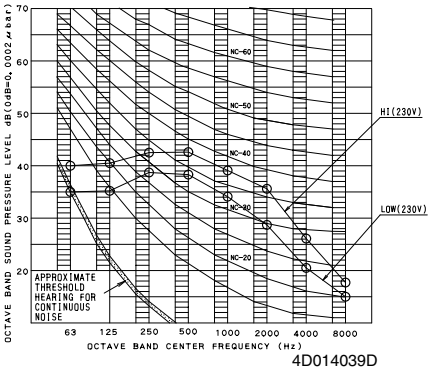

4D014039D

11

10. Installation

10.1 Indoor Units

Installation Example

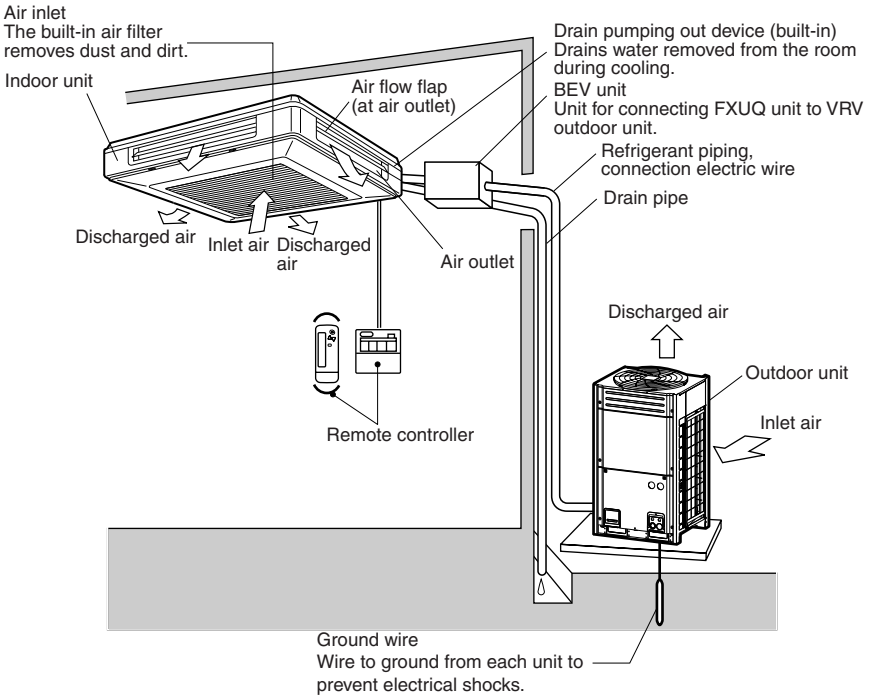

Service Space

Select an installation site where the following conditions are fulfilled and that meets your customer's approval.

- In the upper space (including the back of the ceiling) of the indoor unit where there is no possible dripping of water from the refrigerant pipe, drain pipe, water pipe, etc.
- Where optimum air distribution can be ensured.
- Where nothing blocks air passage.
- Where condensate can be properly drained.
- Where the ceiling is strong enough to bear the indoor unit weight.
- Where the false ceiling is not noticeably on an incline.
- Where sufficient clearance for maintenance and service can be ensured.
- Where there is no risk of flammable gas leakage.
- Where piping between indoor and outdoor units is possible within the allowable limit. (Refer to the installation manual for the outdoor and BEV units.)

[CAUTION]

Only use the included parts or parts which match the specifications when installing the unit.

- Install the indoor unit no less than 2.5 m above the floor. Where unavoidably lower, take what measures are necessary to keep hands out of the air outlet.

Space required for installation

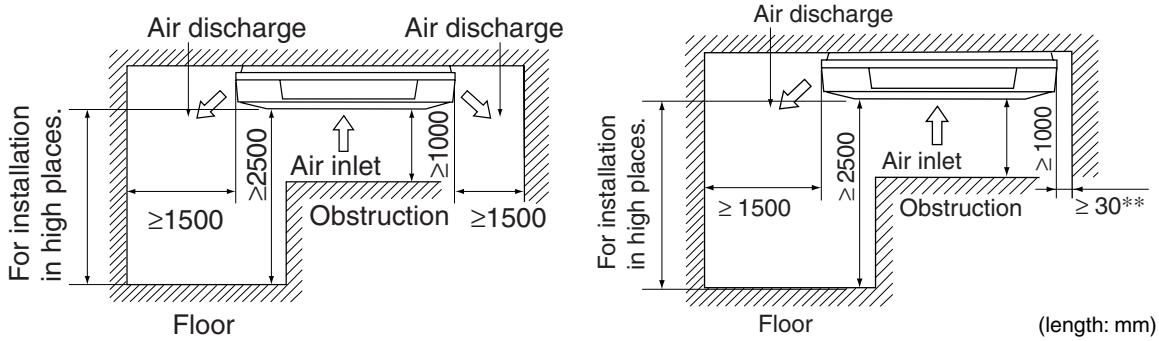

** Space is required to attach/detach corner covers.

(V2324)

Bolt Pitch

1. FOR 4-WAY AIR DISCHARGE

1. **Relation of holes for indoor unit, suspension bolt position, piping and wiring. (Refer to Fig. 2)**
   (Illustrations seen from ceiling)
   ∗ Dimensions in ( ) for 100 and 125 models
   ∗∗∗ Suspension bolt pitch

2. **Make holes for suspension bolts, refrigerant and drain piping, and wiring. (Refer to Fig. 3)**
   - Refer to the paper patten for the locations.
   - Select the location for each of holes and open the holes in the ceiling.

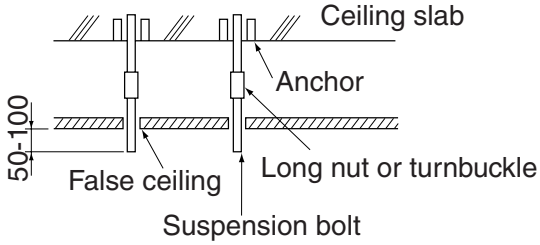

Fig. 3

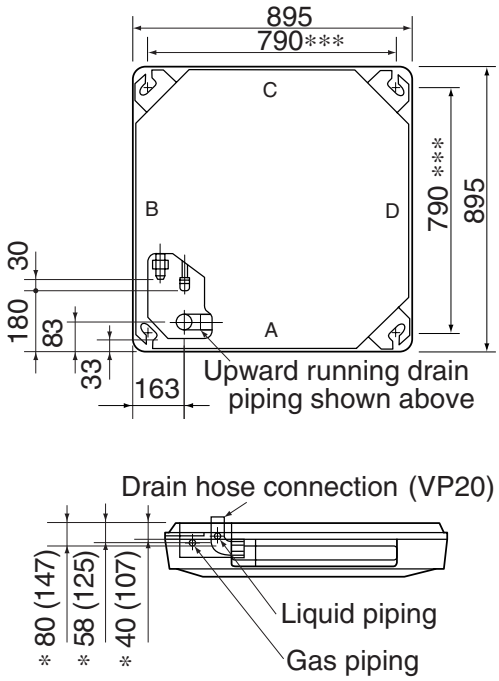

Fig. 2

NOTE
All the above parts are field supplied.

(V2325)

11

2. FOR 2-WAY OR 3-WAY AIR DISCHARGE

2-way and 3-way air discharge must be set from the remote controller. For details, see FIELD SETTING.

1. **Relation of holes for indoor unit, suspension bolt position, piping and wiring. (Refer to Fig. 8)**

NOTE
Illustrations seen from ceiling
∗ Dimension in ( ) for 100 and 125 models
∗∗∗Suspension bolt pitch

2. **Make holes for suspension bolts, refrigerant and drain piping, and wiring. (Refer to Fig. 9)**
   - Refer to paper pattern for the locations.
   - Select the location for each of holes and open the holes in the ceiling.

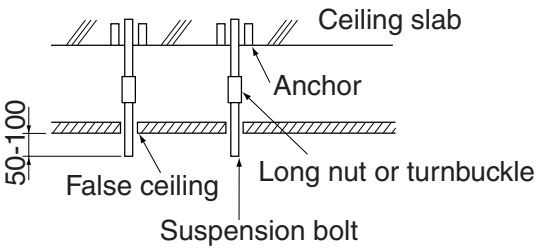

Fig. 9

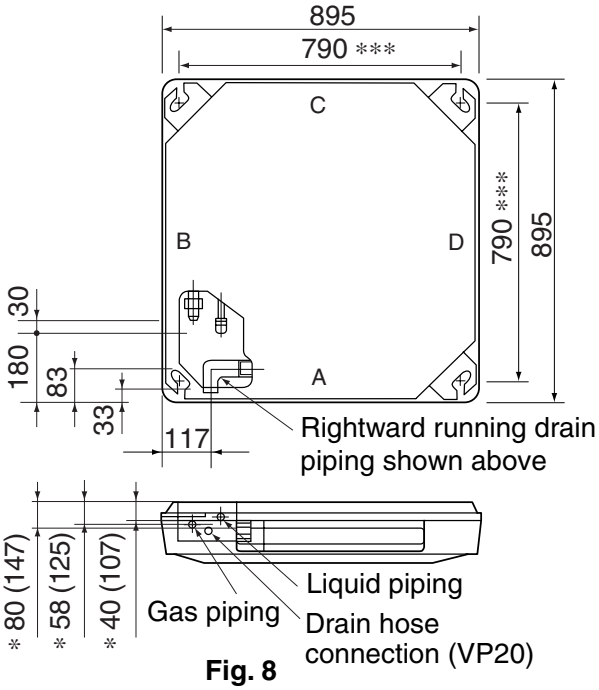

Fig. 8

(V2326)

Drain Piping Work

1. Rig drain piping (Refer to Fig. 26)

As for drain work, perform piping in such a manner that water can be drained properly.
As for drain piping, the connection can be made from three different directions.

- Employ a pipe with either the same diameter or with the diameter larger (excluding the raising section) than that of the connecting pipe (PVC pipe, nominal diameter 20 mm, outside diameter 26 mm).
- Keep the drain pipe short and sloping downwards at a gradient of at least 1/100 to prevent air pockets from forming. **(Refer to Fig. 27)**

CAUTION

Water pooling in the drainage piping can cause the drain to clog.

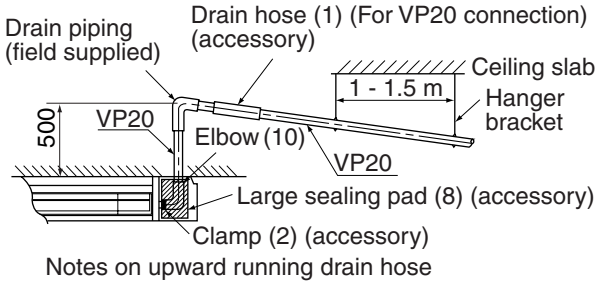

Fig. 26

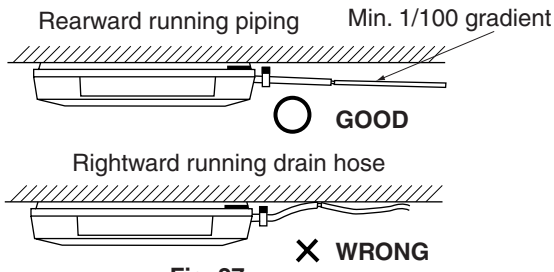

Fig. 27

(V2327)

- To keep the drain hose from sagging, space hanging wires every 1 to 1.5 m. **(Refer to Fig. 26)**
- Use only the included drain hose (1), (for rightward running drain hose) or elbow (10) (for upward running drain hose) and clamp (2).
- Fit the drain hose (1) or elbow (10) over the drain pipe up to the neck and fasten tight with the clamp (2).
- Insulate the clamp (2) and drain hose or elbow (10) with the included sealing pad (8). **(Refer to Fig.28)**
- Make sure that heat insulation work is executed on the following 2 spots to prevent any possible water leakage due to dew condensation.
  - Insulate the drain hose inside the building.
  - Drain socket

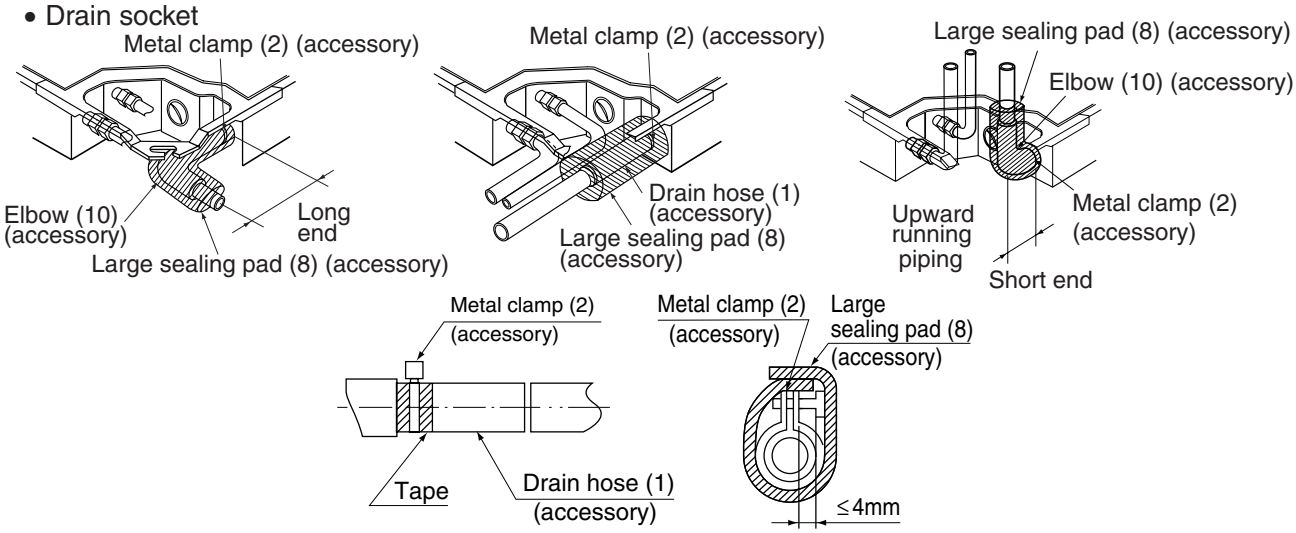

Fig. 28

CAUTION

- Do not twist or bend the drain hose (1), so that excessive force is not applied to it, as this could cause leaks.

- If converging multiple drain piping, install according to the procedure shown below. **(Refer to Fig. 29)**

Select converging drain piping whose gauge is suitable for the operating capacity of the unit.

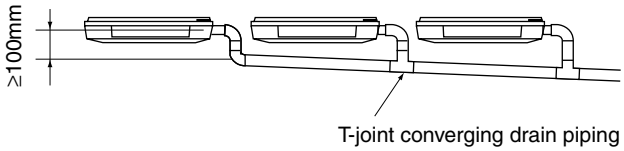

Fig. 29

PRECAUTIONS FOR UPWARD DRAIN RAISING PIPING

- Install the drain raising pipes at a height of less than 500 mm.
- Install the drain raising pipes at a right angle to the indoor unit. **(Refer to Fig. 30)**

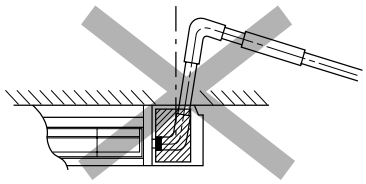

WRONG

Fig. 30

⚠ CAUTION

If the upward running drain hose leans at a slant, the float switch will malfunction and water will leak.

(V2328)

2. **After piping work is finished, check if drainage flows smoothly.**
   - Open the water inlet lid, add approximately 1 liter of water slowly and check drainage flow. **(Refer to Fig. 31)**

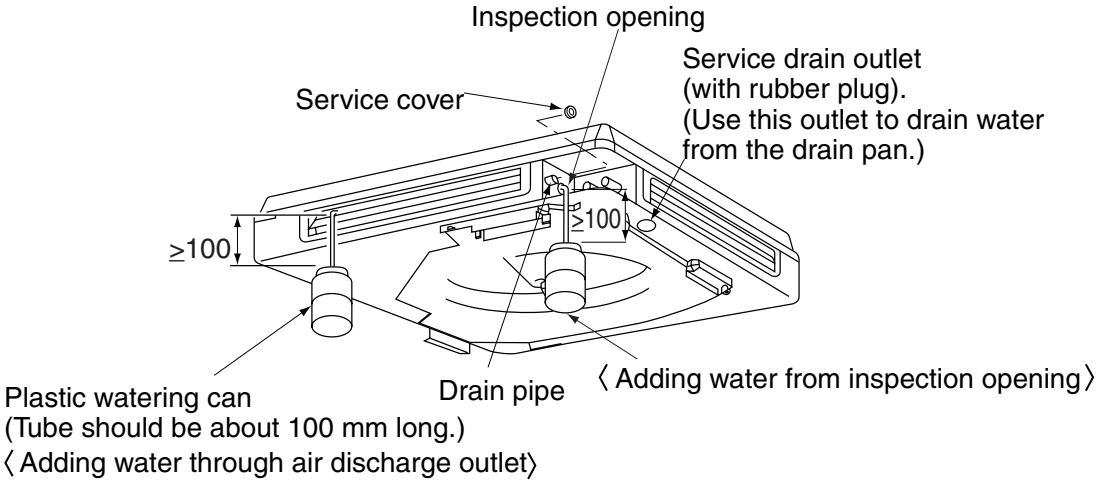

Method of adding water

Fig. 31 (V2329)

[Caution]

Drain piping connections

- Do not connect the drain piping directly to sewage pipes that smell of ammonia. The ammonia in the sewage might enter the indoor unit through the drain pipes and corrode the heat exchanger.

11

CAUTION

- Electrical wiring work should be done by a certified electrician.
- If someone who does not have the proper qualifications performs the work, perform the following after the test run is complete.

- Remove the control box lid and change the emergency switch above the PC board assembly of the indoor unit from “NORM.” to “EMERG.”. Connect the single-phase power supply (1, 3) and ground wire to the inter-unit wiring (50Hz 220-240V) terminal block and confirm drain operation.Be sure to change the switch before turning on the power. **(Refer to Fig. 32)**

CAUTION

- Clamp solidly to clamp C to tension is not added to the wiring connections.
- Be aware that the fan will turn during the operation.

- After confirming drainage, turn off the power and be sure to change the emergency switch back to “NORM.”.

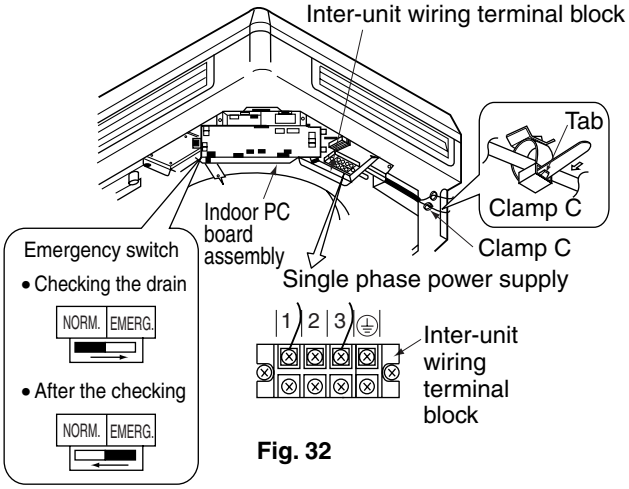

Fig. 32

(V2330)

10.2 Connecting Units

Before Installation

- **When moving the unit while removing it from the carton box, be sure to lift it by holding on to the two lifting lugs without exerting any pressure on other parts, especially, the refrigerant piping.**
- Be sure to check the type of R-410A refrigerant to be used before installing the unit. (Using an incorrect refrigerant will prevent normal operation of the unit.)
- BEV unit is an electronic expansion valve unit for allowing the indoor unit to be connected to the system for the VRV system.
- BEV unit may only be connected to the models shown in the table below. Do not attempt connection with other models.

Indoor unit
Ceiling Suspended Cassette Type

- See the included installation manuals on the VRV outdoor unit and the ceiling suspended cassette type indoor unit for details.
- For the indoor unit connected to the BEV unit, cooling/heating cannot be switched over with the remote controller.
- When the cooling/heating free system is connected to the BS unit, a cooling/heating selection right is allowed.
- When the ceiling suspended cassette type indoor unit and BEV unit are used for all indoor units, a separate “Cool/Heat SELECTOR” is needed to enable the cooling/heating switchover.

Service Space.

《 When hanging the unit from the ceiling 》

Install so that the control box lid is facing down.

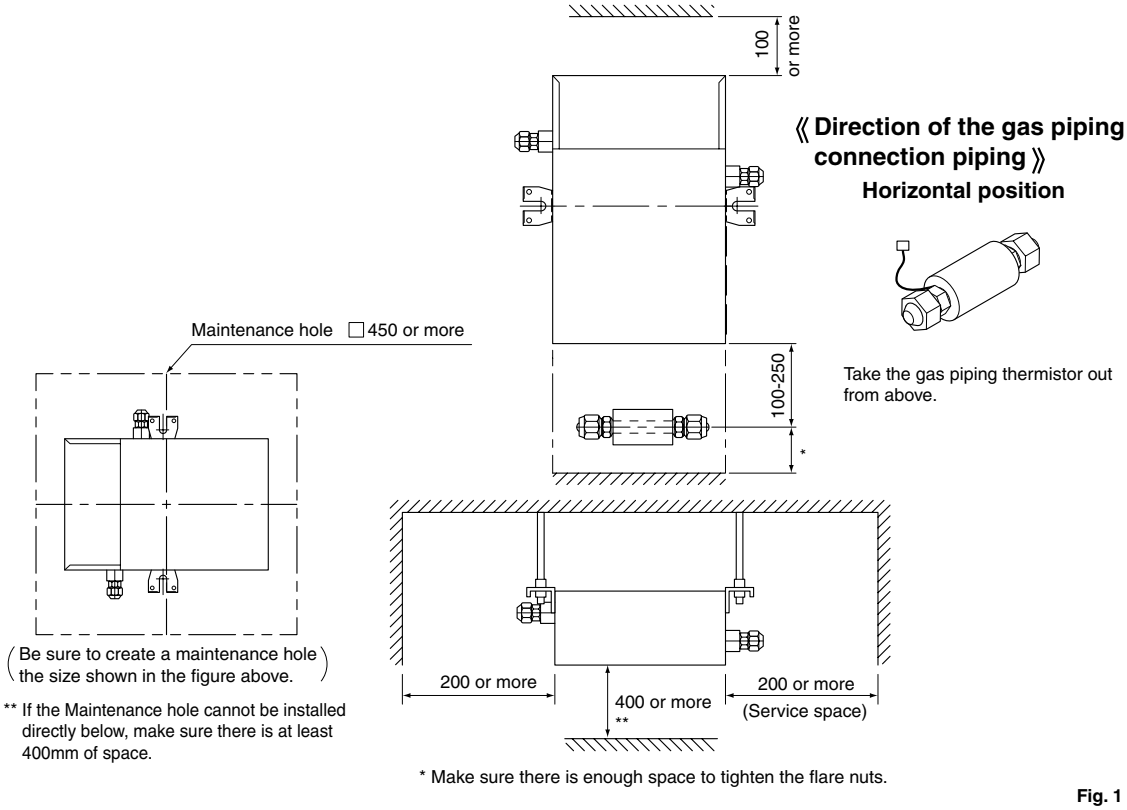

Fig. 1

(length: mm)

.

《When installing the unit on a wall》

Make sure the wiring outtake is facing down, and no other direction.

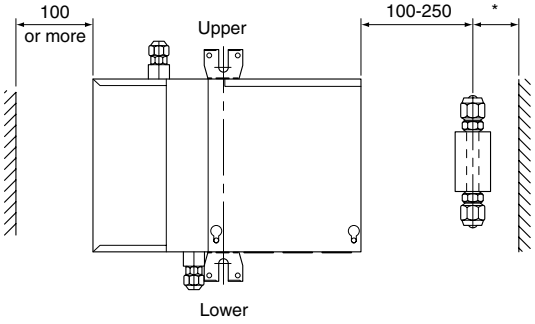

* Make sure there is enough space to tighten the flare nuts.

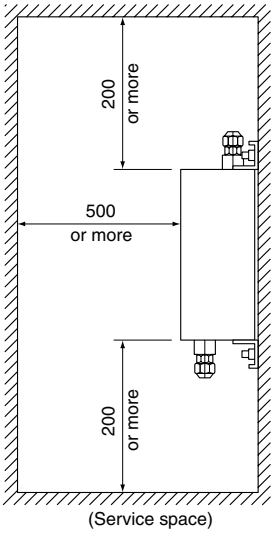

《Direction of the gas piping connection piping》

Upright and diagonal position

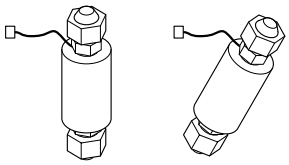

Take the gas piping thermistor out from above.

Fig. 2
(length: mm)

Bolt Pitch

《 When hanging the unit from the ceiling 》

(1) Check the relative locations of ceiling hole, unit, and hanging bolts.

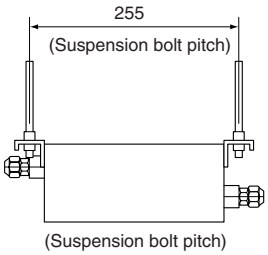

Fig. 3

(length: mm)

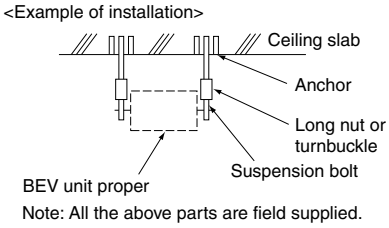

Fig. 4

(2) Open the eyebolt holes or the holes for passing the piping and wiring out of the unit.
- Set the locations for the above holes, open them up and then lay the piping (refrigerant) and wiring (including both power supply and transmission wiring) up to the piping and wiring connections in the unit.
- It might be necessary to reinforce the ceiling frame to maintain the levelness and to prevent vibration. Consult an architect or carpenter for details.

(3) Install the hanging bolts. (Use M8 hanging bolts.)
- If it is pre-set, use hole-in anchors. Otherwise, use embedded inserts or embedded foundation bolts to make sure that the weight of the unit can be supported. Adjust the distance to the ceiling beforehand.

《 When installing the unit on a wall 》

(1) Check the relative locations of ceiling hole, unit, and hanging bolts.

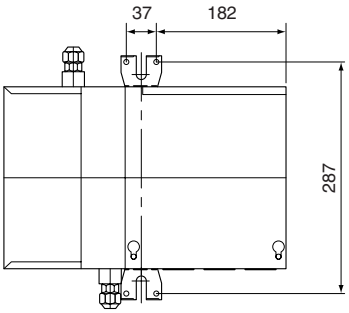

(length: mm)

Fig. 5

- Use only accessories and parts which are of the designated specification when installing.

《 When hanging the unit from the ceiling 》

(1) Temporarily install the BEV unit.
- Mount the hanging fittings to hanging bolts. Secure the hanging fittings on the top and the bottom with nuts (M8, field supplied) and washers (M8: Outside diameter size 24 to 28 mm) (field supplied).

(2) Adjust the height of the main unit with the nut.
(3) Check that the main unit is installed on the level.
(4) Tighten the nut on both the top and the bottom to fix securely.

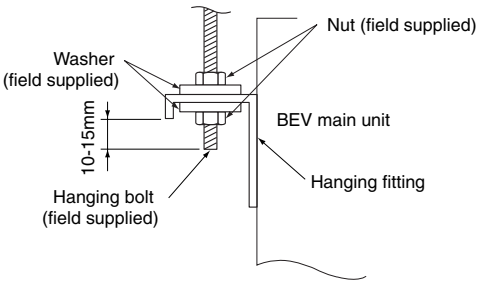

Fig. 6

《 When installing the unit on a wall 》

(1) Mount the hanging fittings with the mounting screws (4 pieces).
(2) Use M4 screws.

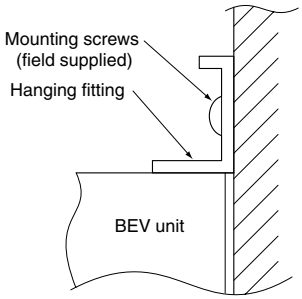

Fig. 7

11

Refrigerant Piping work

〈This shows the piping method between the outdoor unit and the BEV unit and the indoor unit. Select the pipe size and refrigerant branch kit depending on how the piping will be laid.〉
〈For refrigerant piping of outdoor units, see the installation manual attached to the outdoor unit.〉
〈Execute heat insulation work completely on both sides of the gas piping and the liquid piping. Otherwise, a water leakage can result sometimes.〉
〈When using a heat pump, the temperature of the gas piping can reach up to approximately 120˚C, so use insulation which is sufficiently resistant.〉
〈Improve the insulation on the refrigerant piping depending on the installation environment. If the insulation is not sufficient, condensation may form on the surface of the insulation.〉
〈Before refrigerant piping work, check which type of refrigerant is used. Proper operation is not possible if the types of refrigerant are not the same.〉

⚠ CAUTION

- **Use a pipe cutter and flare suitable for the type of refrigerant.**
- **Apply ester oil or ether oil around the flare section before connecting.**
- **To prevent dust, moisuture or other foreign matter from infiltrating the tube, either pinch the end or cover it with tape.**
- **Do not allow anything other than the designated refrigerant to get mixed into the refrigerant circuit, such as air, etc. If any refrigerant gas leaks while working on the unit, ventilate the room thoroughly right away.**

- The outdoor unit is charged with refrigerant.
- For the refrigerant piping and branching, follow the **"piping connection procedure"**.
- Be sure to use both a spanner and torque wrench together, as shown in the drawing, when connecting or disconnecting piping to/from the unit.
- Refer to the Table 1 for the dimensions of flare nut spaces.
- When connecting the flare nut, coat the flare both inside and outside with ester oil or ether oil and initially tighten by hand 3 or 4 turns before tightening firmly.
- Refer to the Table 1 to determine the proper tightening torque.

Table 1

Pipe size	Tightening torque	Flare dimension A (mm)	Flare shape
ϕ9.5 (3/8")	32.7 – 39.9N·m (333 – 407 kgf·cm)	12.8 – 13.2	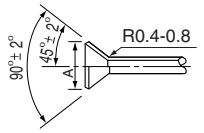
ϕ15.9 (5/8")	61.8 – 75.4N·m (630 – 770 kgf·cm)	19.3 – 19.7	

NOTE
The flare nuts used must be those included with the main body.

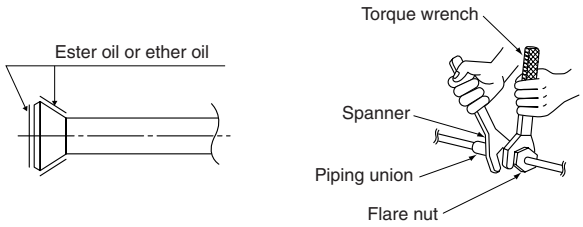

⚠ CAUTION

Over-tightening may damage the flare and cause a refrigerant leakage.

Not recommendable but in case of emergency

You must use a torque wrench but if you are obliged to install the unit without a torque wrench, you may follow the installation method mentioned below.

When you keep on tightening the flare nut with a spanner, there is a point where the tightening torque suddenly increases. From that position, further tighten the flare nut the angle shown below:

Table 2

Pipe size	Further tightening angle	Recommended arm length of tool
ϕ 9.5 (3/8")	60 to 90 degrees	Approx. 200mm
ϕ15.9 (5/8")	30 to 60 degrees	Approx. 300mm

After the work is finished, make sure to check that there is no gas leak.

- Make absolutely sure to execute heat insulation works on the pipe-connecting section after checking gas leakage by thoroughly studying the following figure.
- Wrap the insulation for fitting (3) (4) around the insulation for the joints on the liquid piping side and the gas piping side. **(Refer to Fig. 9, 10)**
- When installing the unit onto the ceiling, make sure that the seam between the insulation for fitting (3) (4) faces up. (Fasten both ends with the clamps (2).) (Fig.9, 10 shows the case of installation on the wall.)
- Wrap the included sealing pad (5) (6) around the insulation for fitting (3) (4). **(Refer to Fig. 8)**

CAUTION

Be sure to insulate any field piping all the way to the piping connection inside the unit. Any exposed piping may cause condensation or burns if touched.

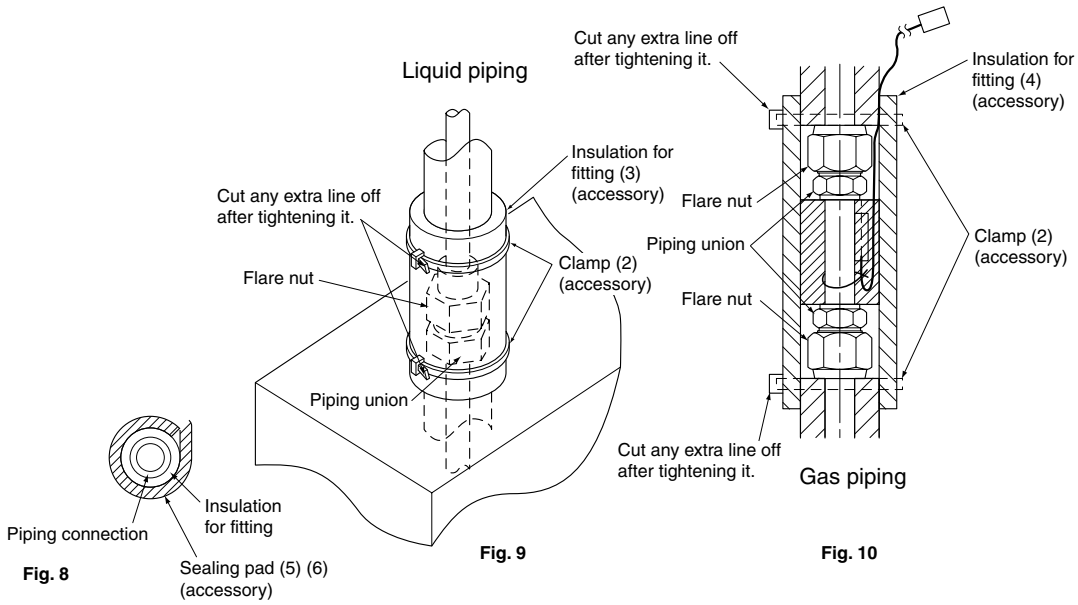

Fig. 8 Fig. 9 Fig. 10

CAUTION

CAUTION TO BE TAKEN WHEN BRAZING REFRIGERANT PIPING

Do not use flux when brazing refrigerant piping. Therefore, use the phosphor copper brazing filter metal (BCuP) which does not require flux.
(Flux has extremely harmful infulence on refrigerant piping sysems. For instance, if the chlorine based flux is used, it will cause piping corrosion or, in particular, if the flux contains fluorine, it will damage the refrigerant oil.)

- Before brazing local refrigerant piping, nitrogen gas shall be blown through the piping to expel air from the piping. If your brazing is done without nitrogen gas blowing, a large amount of oxide film develops inside the piping, and could cause system malfunction.
- When brazing the refrigerant piping, only begin brazing after having carried out nitrogen substitution or while inserting nitrogen into the refrigerant piping. Once this is done, connect the indoor unit with a flared connection.
- Nitrogen should be set to 0.02 MPa (0.2 kg/cm^2) with a pressure-reducing valve if brazing while inserting nitrogen into the piping.

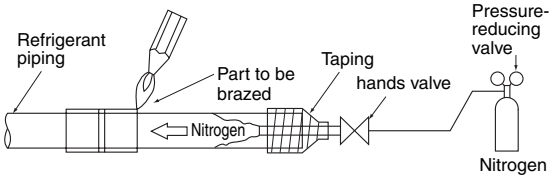

Fig. 11

CAUTION

Do not use anti-oxidants when brazing the piping joints. Residue can clog piping and break equipment.

Piping connection procedure

- Make sure the length of the refrigerant piping between the BEV unit and the indoor unit is no more than 5m and that the difference in height is at least 4m.

(1) Connection example for the indoor unit

- Only one indoor unit may be connected to each BEV unit.

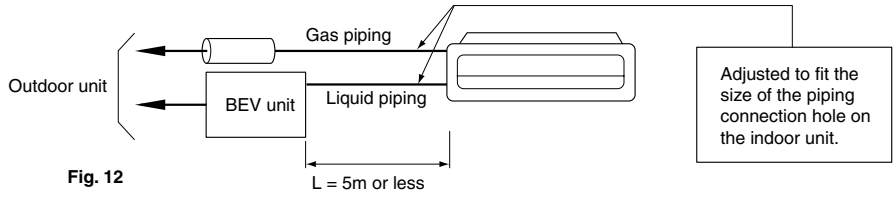

Fig. 12

(2) Height difference between indoor units

- Install the BEV unit in the 15m range of difference in height between the indoor units.
- Make sure the difference in height between the BEV unit and the indoor unit is no more than 4m.

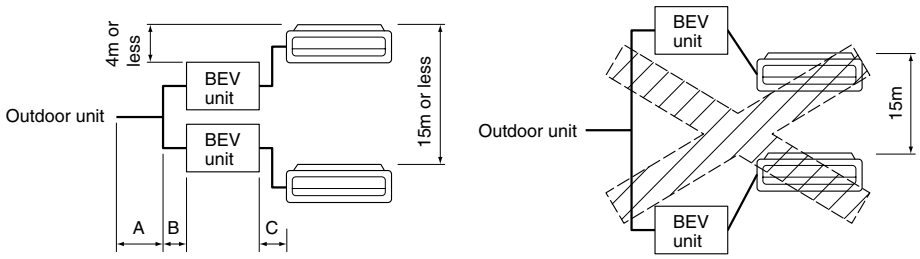

Fig. 13

(3) Allowable length after split (actual piping length)

B+C≤35m (length from the first branch piping to the indoor unit)

(4) Additional refrigerant amount

When measuring the amount of additional to refrigerant to fill, include the length of the liquid piping between the BEV unit and the indoor unit.

Additional filling amount = a+b+c+d+e+f+g+h+i+j+k+l+m+n+p+q

Refer also to the installation manual included with the outdoor unit.

Example of refrigerant branch using a REFNET joint

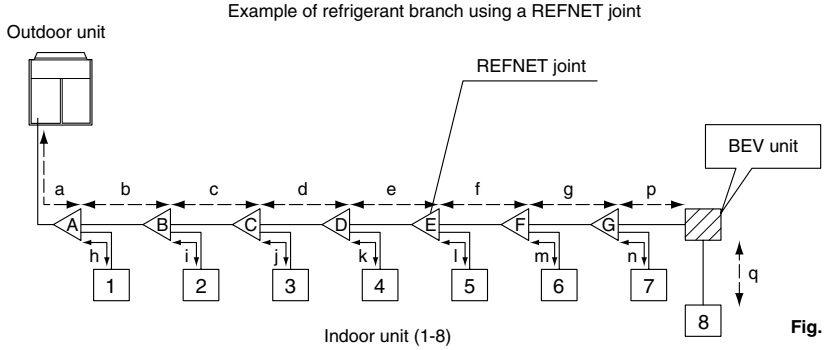

Fig. 14

Wiring Example and How to Set the Remote Controller

1 HOW TO CONNECT WIRINGS

- Connect the piping only after finishing the refrigerant piping work.
- Make sure all power supply is shut down to the unit first.
- As shown in the Fig. 16, loosen the two screws in the control box lid, remove it, and do the wiring work.
- Once all wiring is done, attach the control box lid and secure it with the screws.
  If you are using “4. DEF AULT SETTINGS,” however, finish that and then attach the control box lid and secure it with the screws.

2 THE GAS PIPING THERMISTOR

- Connect to (X5A) on A1P.
- Bundle the gas piping thermistor lead wire and the branch wiring (transmission) using the included clamping material.
- Tension is not added to the gas pipe thermistor lead wire coming out of the unit.

- **Power supply wiring • Ground wire**
  Connect the wiring to R (L) and S (N) on the power supply terminal block (X1M). Also, connect the ground wire to the ground terminal. Take the wiring and the ground wire into the unit through the wiring pass-through hole, and firmly secure them together using the included clamp (1).
- **Indoor unit inter-unit wiring**
  Connect the wires to 1, 2, and 3 on the power supply terminal block (X1M). Take the wires into the unit through the wiring pass-through hole, and firmly secure them using the included clamp (1).
- **Transmission wiring**
  Connect the wires to F1 and F2 on the transmission terminal block (X2M). Take them into the unit through the wiring pass-through hole, and firmly secure the gas piping thermister lead wire and the transmission wiring using the included clamp (1).

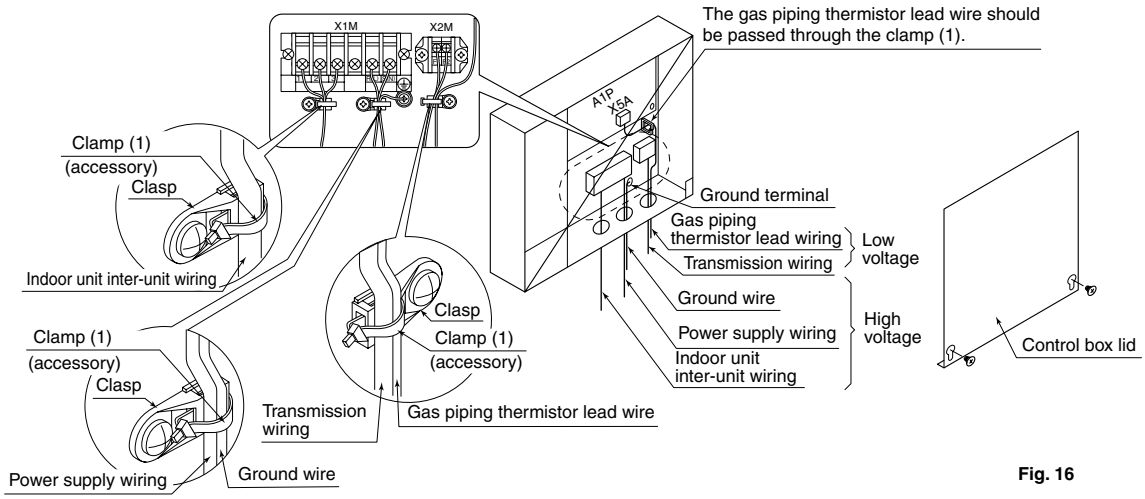

Fig. 16

[CAUTIONS]

- Do not under any circumstances connect the power supply wiring to the transmission terminal block (F1, F2), as this may cause damage to the entire system.

⚠ CAUTION

- When clamping wiring, use the included clamping material to prevent outside presure being exerted on the wiring connections and clamp firmly. When doing the wiring, make sure the wiring is neat and does not cause the control box lid to stick up, then close the cover firmly.
- When attaching the control box lid, make sure you do not pinch any wires.
- After all the wiring connections are done, fill in any gaps in the through holes with putty or insulation (procured locally) to prevent small animals and insects from entering the unit from outside. (If any do get in, they could cause short circuits in the control box.)
- Outside the machine, separate the weak wiring (gas piping thermistor lead wire, transmission wiring) and strong wiring (power supply wiring, inter-unit wiring, ground wire, and other power wiring) at least 50mm so that they do not pass through the same place together. Proximity may cause electrical interference, malfunctions, and breakage.

[PRECAUTIONS]

1. Use round crimp-style terminals for connecting wiring to the power supply terminal block.
   If unavailable, observe the following points when wiring.
   - Do not connect wiring of different gauge to the same power supply terminal.
     (Looseness in the connection may cause overheating.)
   - Use the specified electric wiring. Connect the wiring securely to the terminal. Lock the wiring down without applying excessive force to the terminal. (Tightening torque: 131N·cm ±10 %)

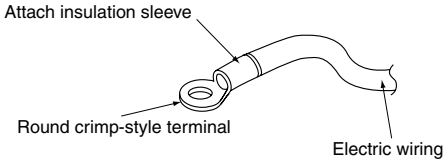

2. **Tightening torque for the terminal screws.**
   - Use the correct screwdriver for tightening the terminal screws. If the blade of screwdriver is too small, the head of the screw might be damaged, and the screw will not be properly tightened.
   - If the terminal screws are tightened too hard, screws might be damaged.
   - Refer to the table below for the tightening torque of the terminal screws.

Terminal	Size	Tightening torque
Transmission terminal block (2P)	M3.5	0.79 – 0.97N·m
Power supply and inter-unit wiring terminal block (6P)	M4	1.18 – 1.44N·m
Ground terminal	M4	1.44 – 1.94N·m

3. Do not connect wiring of different gauge to the same grounding terminal. Looseness in the connection may deteriorate protection.
4. Outside of the unit, keep the weak wiring (gas piping thermistor lead wire, transmission wiring) at least 50 mm away from strong wiring (power supply wiring, inter-unit wiring, ground wire, and other power wiring). The equipment may malfunction if subjected to electrical (external) noise.
5. For remote controller wiring, refer to the “INSTALLATION MANUAL OF REMOTE CONTROLLER” attached to the remote controller.
6. **Never connect power supply wiring to the terminal block for remote controller wiring. A mistake of the sort could damage the entire system.**
7. Use only specified wiring and tightly connect wiring to terminals. Be careful wiring do not place external stress on terminals. Keep wiring in neat order and so as not to obstruct other unit such as popping open the control box lid. Make sure the lid closes tight. Incomplete connections could result in overheating, and in worse case, electric shock or fire.

[WIRING EXAMPLE]

- Fit the power supply wiring of each unit with a switch and fuse as shown in the drawing.

COMPLETE SYSTEM EXAMPLE (3 systems)

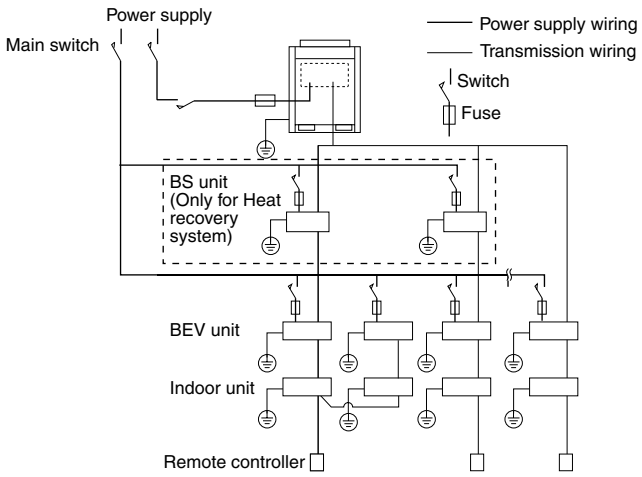

Fig. 17

1. When using 1 remote controller for 1 indoor unit. (Normal operation)

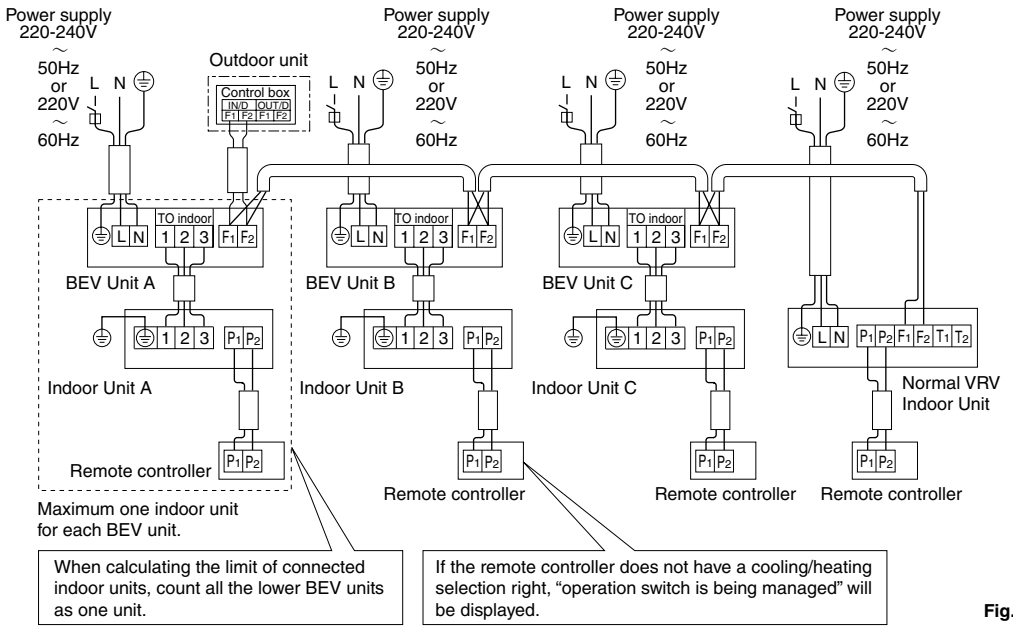

Fig. 18

<Caution>

Group control is not possible between ceiling suspended cassette type units and normal VRV indoor units.

2. For group control or use with 2 remote controllers

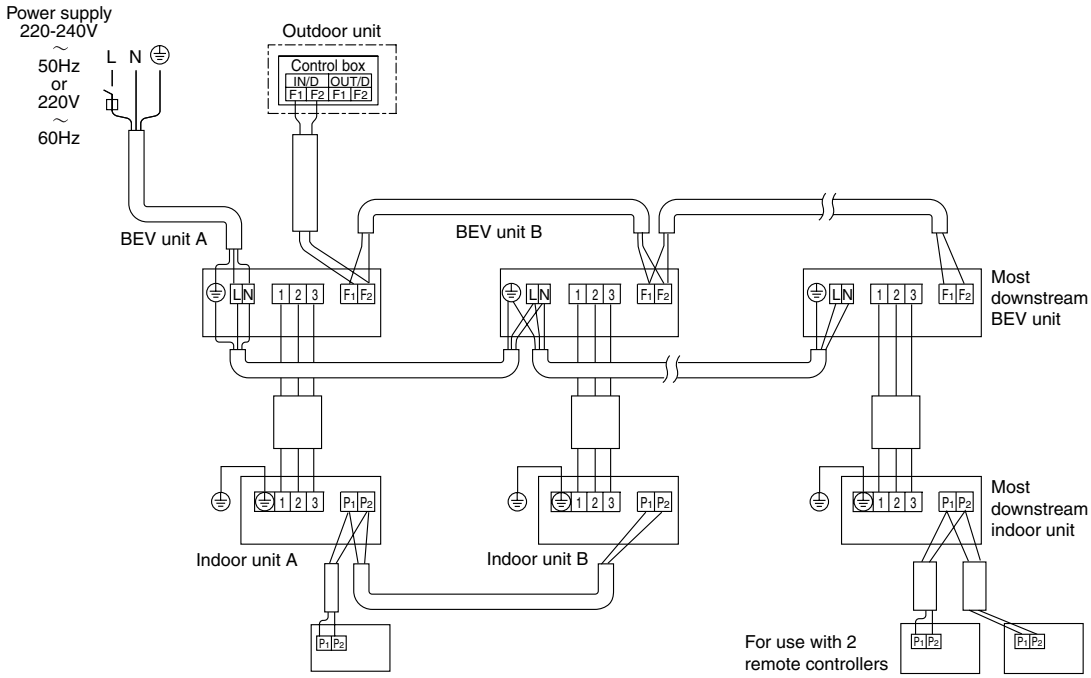

Fig. 19

3. When including BS unit

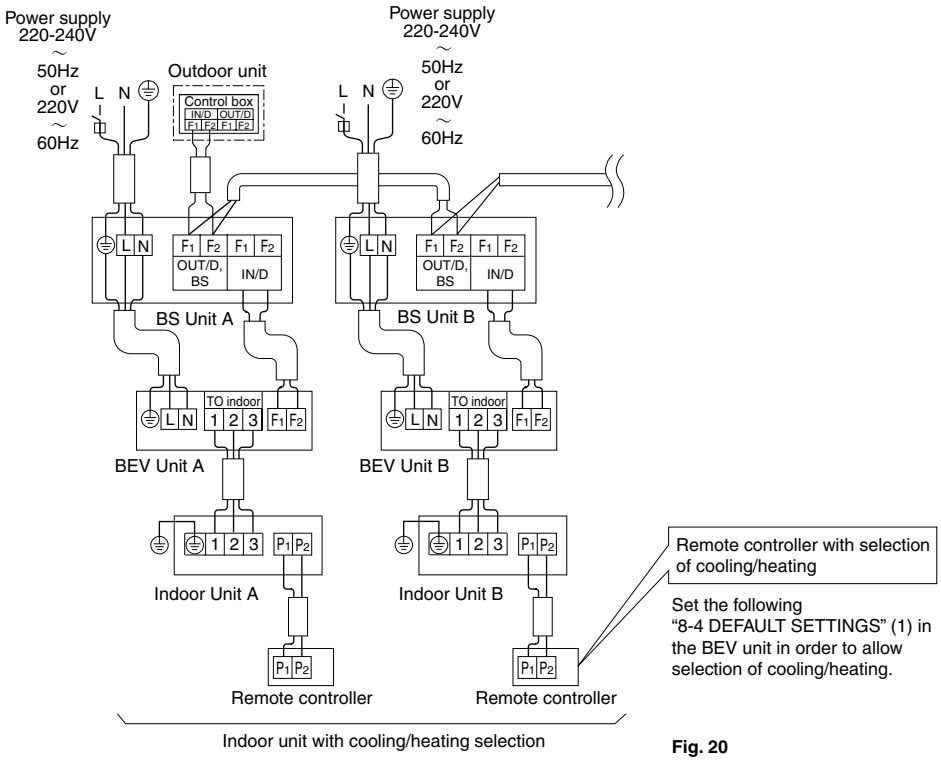

Fig. 20

4. DEFAULT SETTINGS

1. Once piping work is completed, conduct the following settings as needed.
   (1) When connecting the BEV unit to the BS unit in the heating/cooling free system, turn the SS1 on the A1P to M (Main) for only one of the BEV units connected to the remote controller on which heating/cooling switching is made possible. **(Refer to Fig. 21)**

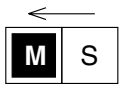

Fig. 21

   (2) For BEV unit-only systems
   The Cool/Heat SELECTOR is needed.
   Refer to the installation manual included with the Cool/Heat SELECTOR for details on how to set it.
2. Once all piping work is done, screw the control box lid shut using the mounting screws.

11. Accessories

Standard Accessories (Indoor Unit)

Check the following accessories are included with the unit.

Name	1) Drain hose	2) Metal Clamp	3) Washer for looking hanger	4) Clamp	5) Wahers fixing plate
Quantity	1 pc.	1 pc.	8 pcs.	6 pcs.	4 pcs.
Shape					

Name	Insulation for fitting	Sealing pad	10) Elbow	11) Paper pattern for installation	12) Sealing material
Quantity	1 each	2 pcs.	1 pc.	1 pc.	2 pcs.
Shape	6) For gas pipe 7) For liquid pipe	8) Large 9) Small		Also used as packing material	

Name	13) Retainer for blocking pad	14) Retainer for blocking pad	15) Center retainer for blocking pad	(Other) • Operation manual • Installation manual
Quantity	2 pcs.	2 pcs.	2 pcs.	
Shape				

(V2331)

Standard Accessories (Connecting Unit)

Check if the following accessories are included with your unit.

Name	Clamp	Insulation for fitting	Sealing pad	(7) Gas piping connection piping
Quantity	9 pcs.	3 pcs.	3 pcs.	1 pc.
Shape	(1) 3 short pieces (2) 6 long pieces	(3) For liquid piping × 2 (4) For gas piping × 1	(5) Small × 2 (6) × 1	

Name	(8) Installation manual	(9) Nameplate
Quantity	1 pc.	1 pc.
Shape		

Optional Accessories (For Indoor Unit)

No.	Type / Item	FXUQ71MAV1	FXUQ100MAV1	FXUQ125MAV1
1	Sealing Member of Air Discharge Outlet	KDBHJ49F80	KDBHJ49F140	
2	Decoration Panel for Air Discharge	KDBTJ49F80	KDBTJ49F140	
3	Vertical Flap Kit	KDGJ49F80	KDGJ49F140	
4	Replacement Long Life Filter	KAFJ495F140		
5	L Connection Piping Kit	KHFP49M140		

C: 3D045452A

Optional Accessories (For Controls) Refer to P.561

Sealing Member of Air Discharge Outlet – KDBHJ49F80 · 140

Dimension

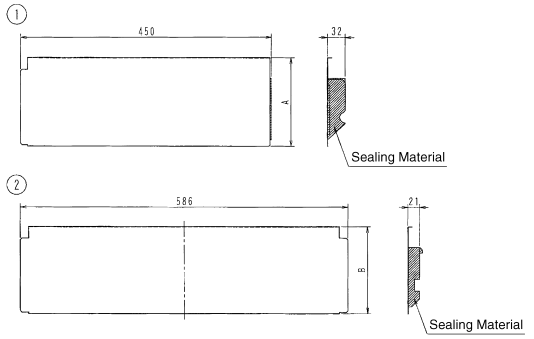

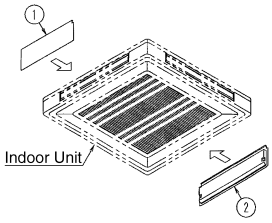

Model	A	B
KDBHJ49F80	100	100
KDBHJ49F140	155	155

Model	Material
KDBHJ49F80	Galvanized Steel Plate
KDBHJ49F140	(with Flocking)

Decoration Panel for Air Discharge – KDBTJ49F80 · 140

Dimension

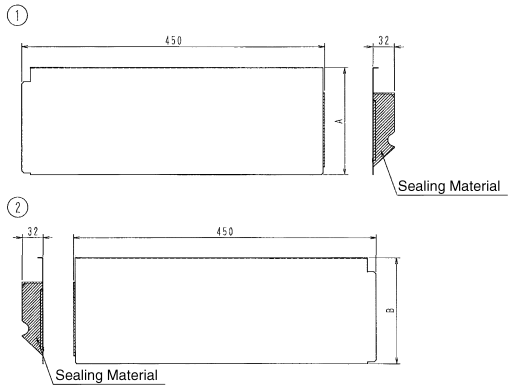

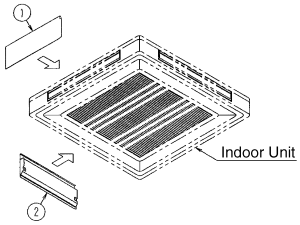

Model	A	B
KDBTJ49F80	100	100
KDBTJ49F140	155	155

Model	Material
KDBTJ49F80	Galvanized Steel Plate
KDBTJ49F140	(with Flocking)

Vertical Flap Kit – KDGJ49F80 · 140

Dimension

KDGJ49F80

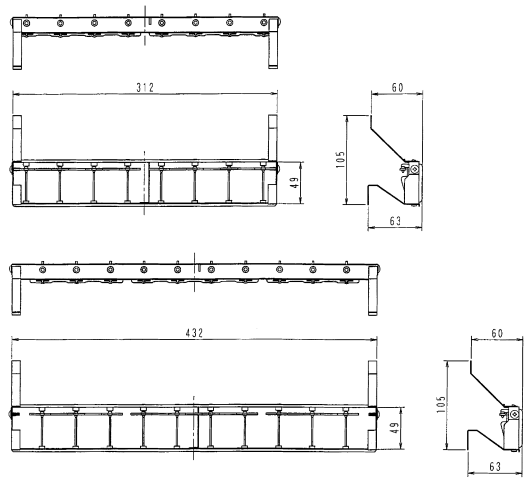

KDGJ49F140

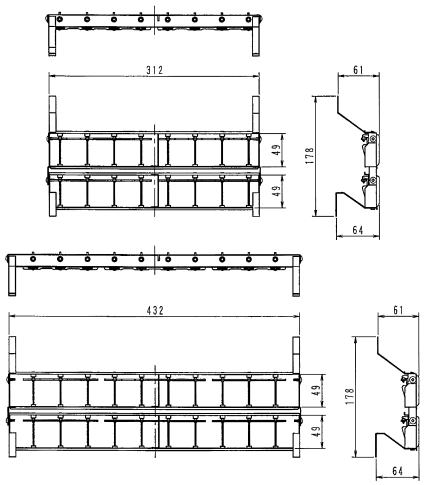

Model	Packing Quantity
KDGJ49F80	4(each 2×2)
KDGJ49F140	

Replacement Long Life Filter – KAFJ495F140

Dimension

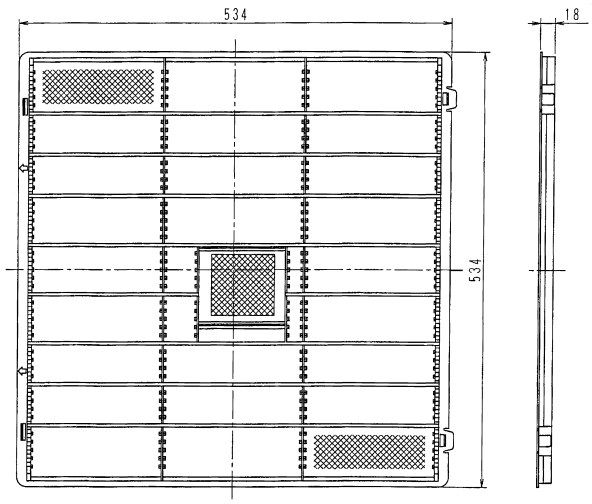

Item \ Model	KAFJ495F140
Initial Pressure Loss (Pa)	Less Than 7
Final Pressure Loss (Pa)	Less Than 49
Average Efficiency (%)	50 (Gravity Method)
Life Time (h)	2,500 (Dust Particle Concentration at 0.15mg/m^3)
Filter Pass Air Flow Rate	18.5m^3/min
Materials	Mildew Proof Resin Net
Number Required Per Model	1
Weight (kg)	0.4

L Connection Piping Kit – KHFP49M140

Dimension

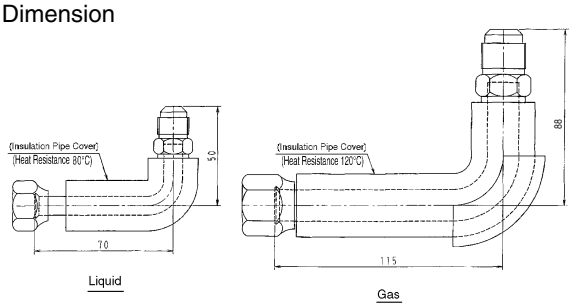

Model	Liquid Side	Gas Side
KHFP49M140	ϕ 9.5	ϕ 15.9

Installation Box for Adaptor PCB – KRP1B97

Dimension

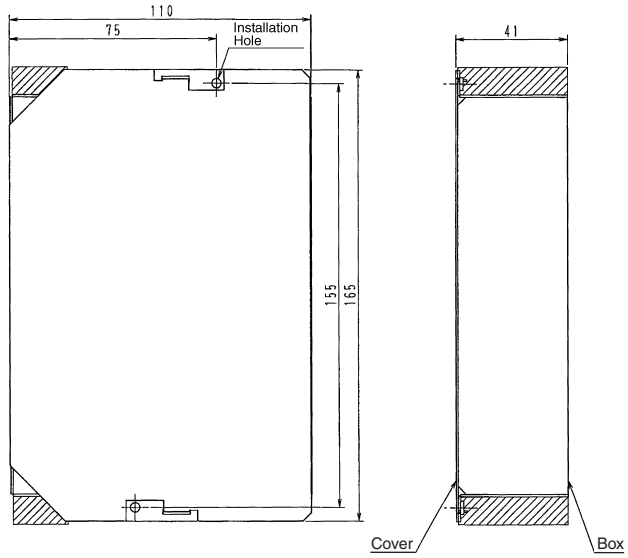

Item \ Model No.	**KRP1B97**
Adaptor for Wiring	KRP4A53

Part 3
Outdoor
Air Processing Unit

FXMQ-MF
Outdoor Air Processing Unit 337

FXMQ-MF
Outdoor Air Processing Unit

1. Features 338
2. Specifications 340
3. Dimensions 341
   3.1 Indoor Units 341
   3.2 Dimensions with Option 343
4. Piping Diagrams 345
5. Wiring Diagrams 346
6. Capacity Tables 347
7. Operation Limit 350
8. Electric Characteristics 352
9. Sound Levels 353
10. Fan Performances 354
11. Installation 356
12. Accessories 369

1. Features

Model Numbers
FXMQ125MFV1, FXMQ200MFV1, FXMQ250MFV1

Combine fresh air treatment and air conditioning, supplied from a single system.

Fresh air treatment and air conditioning can be achieved with a single system by using heat pump technology—without the usual troublesome air supply and air discharge balance design. Fan coil units for air conditioning and an outdoor-air processing unit can be connected to the same refrigerant line. The results are enhanced design flexibility and a significant reduction in total system costs.

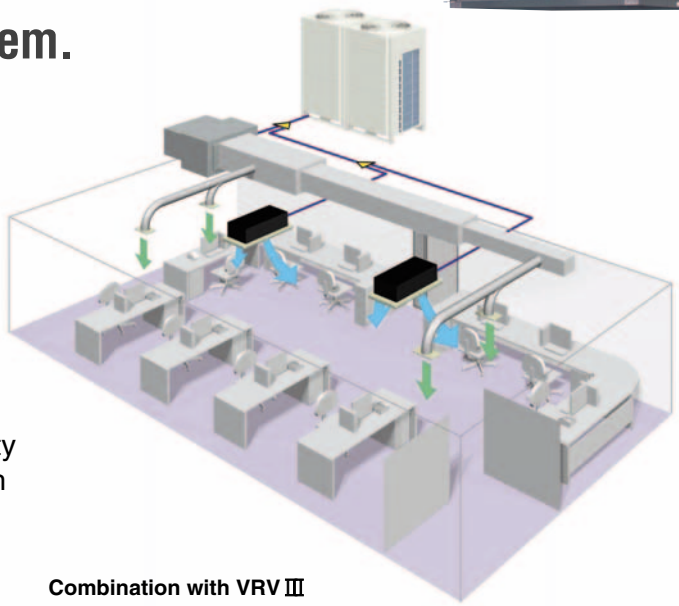

Combination with VRV Ⅲ

Air conditioning and outdoor air processing can be accomplished using a single system.

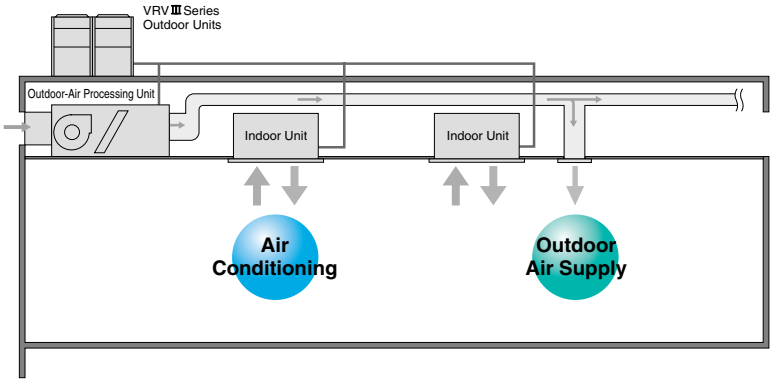

Connection Conditions

The following restrictions must be observed in order to maintain the indoor units connected to the same system.

- The total connected capacity of the standard indoor units and outdoor-air processing units must be between 50% and 100% of the capacity of outdoor units.
  The connected capacity of the outdoor-air processing unit must not exceed 30% of the capacity of outdoor units.
- An outdoor-air processing unit can be used exclusively.The connected capacity of the outdoor-air processing unit must be between 50% and 100% of the capacity of outdoor units.
- Connectable outdoor units: VRV Ⅱ and VRV Ⅲ

System Example

Check to make sure that your system's connected capacity is within the appropriate range.

20 HP System

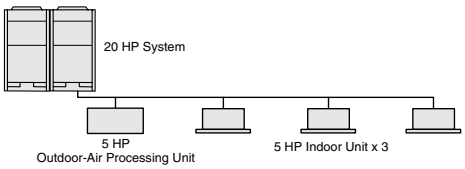

Total connected capacity of standard indoor units and outdoor-air processing unit does not exceed 100%.
OK, because system capacity of 20 HP = indoor unit capacity of 20 HP.
Connected capacity of outdoor-air processing unit does not exceed 30% of this.
OK, because system capacity of 20 HP x 0.3 = 6 HP > outdoor-air processing unit capacity of 5 HP.

- The unit introduces outdoor air and adjusts the outdoor air temperature via fixed discharge temperature control, thereby reducing the air conditioning load.

* The system can operate with outdoor-air temperatures ranging from -5 to 43ºC. Heating performance is somewhat adversely affected when the outdoor-air temperature is 0ºC or below.
* When shipped from the factory, the thermostat is set at 18ºC for cooling and 25ºC for heating. The set temperature can be varied within the range of 13-25ºC during cooling operation, and 18-30ºC during heating operation, in the local setting mode using the wired remote controller. The temperature, however, is not displayed on the remote controller.
* While in machine protection mode and depending on outdoor air conditions, discharge air temperature may not be at the set temperature.
* The fan stops when operating in defrosting, oil returning and hot start operations. The fan also may stop due to mechanical protection control.

- Ceiling mounted duct units with three differing capacities are available. These can be connected to VRV series outdoor units to meet a variety of different requirements.

Air flow rate

FXMQ125MFV1	1,080 m³/h
FXMQ200MFV1	1,680 m³/h
FXMQ250MFV1	2,100 m³/h

- Optional equipment includes long-life filters.

- Compatible with outdoor temperatures from -5ºC to 43ºC.

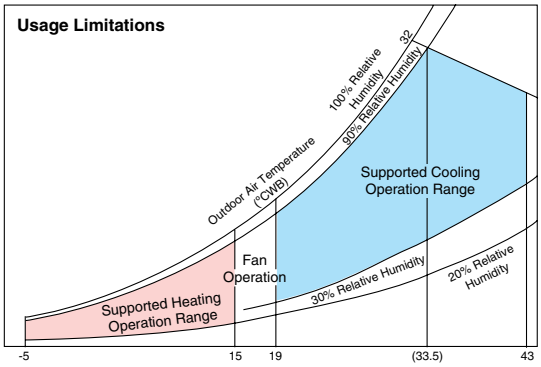

Notes
1. The data shown in the graph illustrates the supported operating ranges under the following conditions.
   Indoor and Outdoor Unit
   Effective piping length: 7.5 m
   Height differential: 0 m
2. The discharge temperature can be set using the remote controller. However, the actual temperature may not match the temperature setting under some circumstances due to the outdoor-air processing load or mechanical protection controls.
3. The system will not operate in fan mode when the outdoor air temperature is 5ºC or below.

- High-performance filters with dust collection efficiencies (JIS calorimetry) of 90% and 65% are also available as options.

- As with the VRVⅢ system, a variety of control systems can be deployed, including remote control from distances of up to 500 m.

BRC1C62
Wired remote controller
(optional)

* Group control is not possible between this unit and standard type indoor units. Connect remote controllers to each unit.

- The "self-diagnosis function" indicates the occurrence and nature of abnormalities in the system by displaying codes on the remote controller.

- A central control system compatible with the VRVⅢ system can be installed.

DCS302CA61
Central remote controller
(optional)

* It is not possible to change the discharge air temperature settings from the central control system.
* Do not associate this equipment into zones with standard indoor units, as central control will not be possible.

- As with the VRVⅢ system, the equipment employs the "super wiring system" so that the wiring linking indoor and outdoor units can also be utilized for central control.

Notes:
* Linked control of the product and the HRV is not supported.
* This equipment is intended for the treatment of outdoor air only. It is not to be used for maintaining indoor air temperature. Install and use with standard indoor units. Be sure to position the air discharge openings of the product in positions where the airflow will not blow on people directly. When outdoor-air processing is in excess, the unit switches to thermo-off mode, and outdoor air flows into the room directly.
* For outdoor ducts, be sure to provide heat insulation to prevent condensation.
* Group control of the product and the standard indoor units is not supported. A separate remote controller should be connected to each individual unit.
* The system will not operate in fan mode when the outdoor air temperature is 5ºC or below.
* If the product is allowed to operate 24 hours a day, maintenance (part replacement, etc.) must be performed periodically.
* Temperature setting and Power Proportional Distribution (P.P.D.) are not possible even if the intelligent Touch Controller or the intelligent Manager ECO21 is installed.
* The remote controller wired to the outdoor-air processing unit must not be set as the master remote controller. Otherwise, when set to “Auto,” the operation mode will switch according to the outdoor air conditions, regardless of the indoor temperature.

2. Specifications

Model			FXMQ125MFV1	FXMQ200MFV1	FXMQ250MFV1
★1 Cooling Capacity		kcal/h	12,000	19,300	24,100
		Btu/h	47,800	76,400	95,500
		kW	14.0	22.4	28.0
Casing			Galvanized Steel Plate	Galvanized Steel Plate	Galvanized Steel Plate
Dimensions: (H×W×D)		mm	470×744×1,100	470×1,380×1,100	470×1,380×1,100
Coil (Cross Fin Coil)	Rows×Stages×Fin Pitch	mm	3×26×2.0	3×26×2.0	3×26×2.0
	Face Area	m²	0.28	0.65	0.65
Fan	Model		D13/4G2DA1	D13/4G2DA1	D13/4G2DA1
	Type		Sirocco Fan	Sirocco Fan	Sirocco Fan
	Motor Output × Number of Units	W	380×1	380×1	380×1
	Air Flow Rate (H/L)	m³/min	18	28	35
		cfm	635	988	1,236
	External Static Pressure ★4	Pa	185	225	205
	Drive		Direct Drive	Direct Drive	Direct Drive
Temperature Control			Microprocessor Thermostat for Cooling and Heating	Microprocessor Thermostat for Cooling and Heating	Microprocessor Thermostat for Cooling and Heating
Sound Absorbing Thermal Insulation Material			Glass Fiber	Glass Fiber	Glass Fiber
Air Filter			★2	★2	★2
Piping Connections	Liquid Pipes		9.5mm (Flare Connection)	9.5mm (Flare Connection)	9.5mm (Flare Connection)
	Gas Pipes		15.9mm (Flare Connection)	19.1mm (Brazing Connection)	22.2mm (Brazing Connection)
	Drain Pipe	(mm)	PS1B (female thread)	PS1B (female thread)	PS1B (female thread)
Machine Weight (Mass)		kg	86	123	123
Sound Level (220V) ★3,★4		dBA	42	47	47
Safety Devices			Fuse Thermal Protector for Fan Motor	Fuse Thermal Protector for Fan Motor	Fuse Thermal Protector for Fan Motor
Refrigerant Control			Electronic Expansion Valve	Electronic Expansion Valve	Electronic Expansion Valve
Standard Accessories			Operation Manual, Installation Manual, Sealing Pads, Screws, Clamps.	Operation Manual, Installation Manual, Sealing Pads, Connection Pipes, Screws, Clamps.	Operation Manual, Installation Manual, Sealing Pads, Connection Pipes, Screws, Clamps.
Connectable Outdoor Units ★5,★6			RXQ8~54PY1	RXQ8~54PY1	RXQ10~54PY1
Drawing No.			C : 3D046147A	C : 3D046147A	C : 3D046147A

Conversion Formulae
kcal/h=kW×860 Btu/h=kW×3412 cfm=m³/min×35.3

Notes:

★1. Specifications are based on the following conditions:
- Cooling: Outdoor temp. of 33°CDB, 28°CWB (68% RH). and discharge temp. of 18°CDB
- Equivalent reference piping length: 7.5m (0m Horizontal)
- At 220V

★2. Air intake filter is not supplied, so be sure to install the optional long-life filter or high-efficiency filter.
Please mount it in the duct system of the suction side. Select its colorimetric method (gravity method) 50% or more.

★3. Anechoic chamber conversion value, measured at a point 1.5m downward from the unit center.
These values (measured at 220V) are normally somewhat higher during actual operation as a result of ambient conditions.

★4. Values measured at 220 V.

★5. Within the range that the total capacity of indoor units is 50 to 100%, it is possible to connect to the outdoor unit.

★6. It is not possible to connect to the 5 HP outdoor unit. Not available for Heat Recovery type and VRV III-S series.
- This equipment cannot be incorporated into the remote group control of the VRV III system.

3. Dimensions

3.1 Indoor Units

FXMQ125MFV1

Unit (mm)

3D045129A

Number	Name	Description
11	Water supply port	
10	Discharge companion flange	
9	Hanger bracket	M10
8	Transmission wiring connection	
7	Power supply wiring connection	
6	Name plate	Note.1
5	Ground terminal	M5(Inside Electric parts box)
4	Electric parts box	
3	Drain piping connection	PS1B Internal thread Major dia. φ33.349, Minor dia. φ30.391
2	Gas pipe connection	φ15.9 Flare connection
1	Liquid pipe connection	φ9.5 Flare connection

Notes) 1. Location of unit's Name Plates:
Electric parts box surface
2. Mount the air filter at the suction side.
(Select its colorimethod (gravity method) 50% or more.)

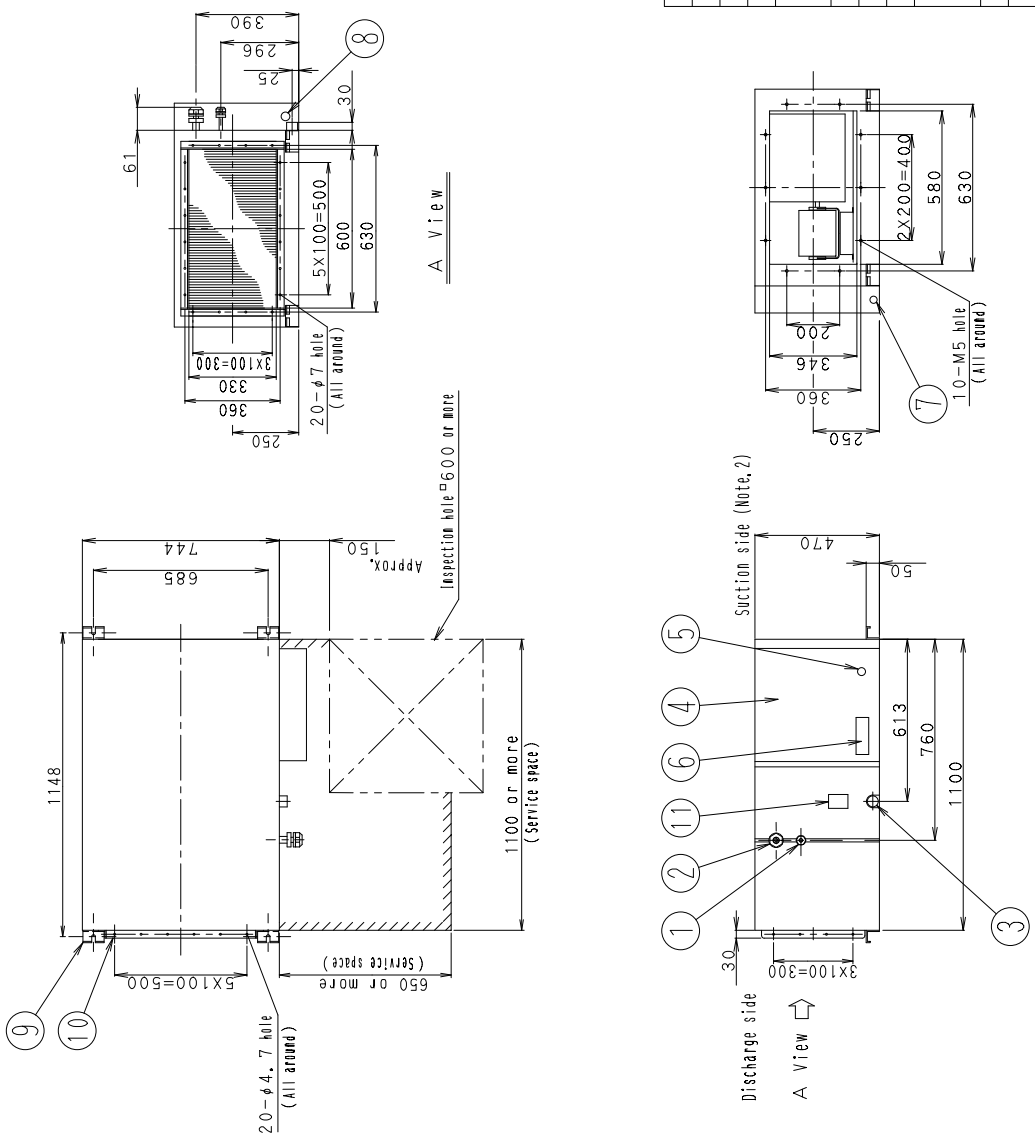

FXMQ200MFV1
FXMQ250MFV1

Unit (mm)

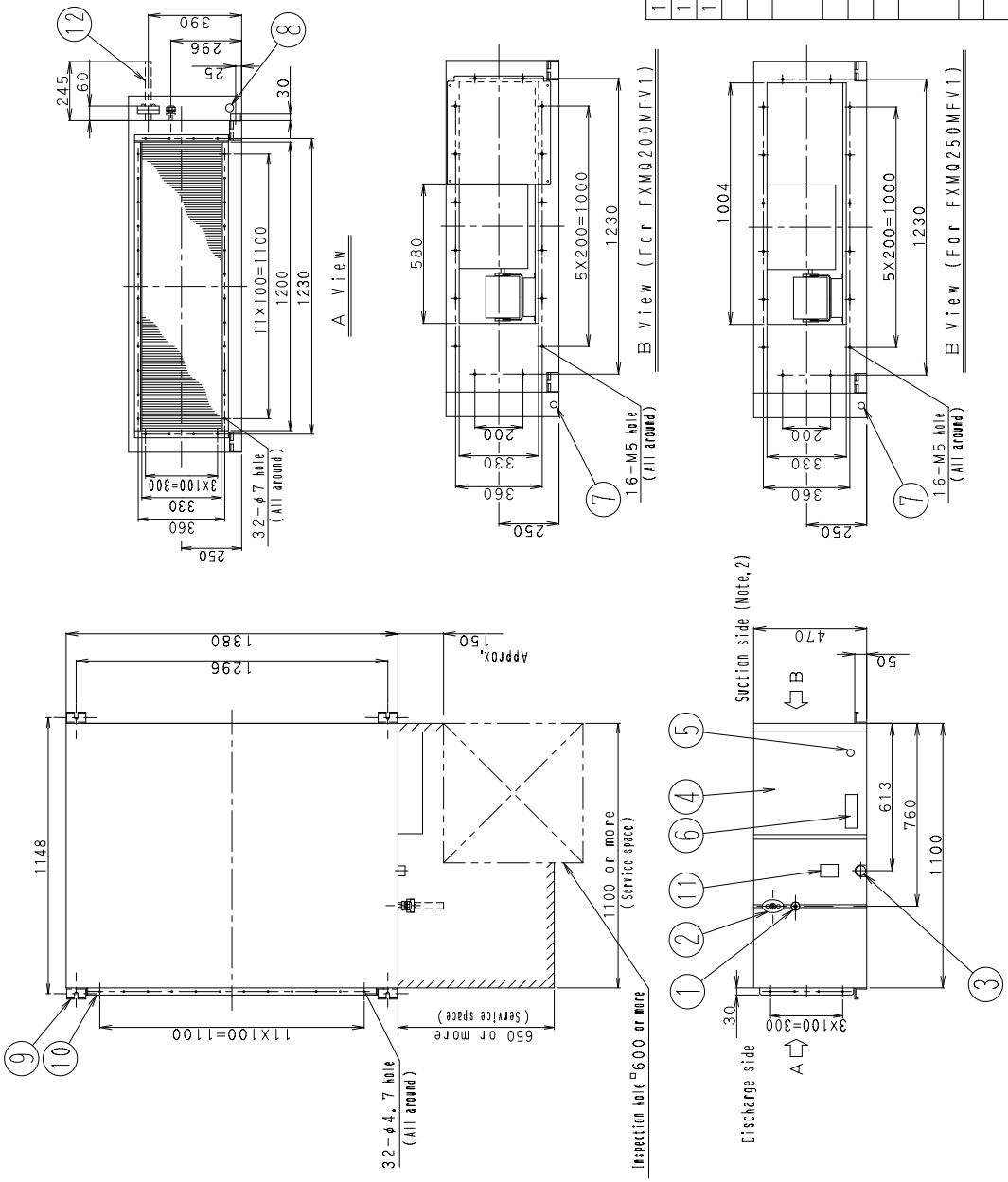

Piping size (Field supply)

Indoor unit	Gas side	Liquid side
FXMQ200MFV1	φ19.1attached piping	φ9.5
FXMQ250MFV1	φ22.2attached piping	φ9.5

Notes) 1. Location of unit's Name Plates: Electric parts box surface
2. Mount the air filter at the suction side. (Select its colorimetric method (gravity method) 50% or more.)

Number	Name	Description
12	Attached piping	Brazing
11	Water supply port	
10	Discharge companion flange	
9	Hanger bracket	M10
8	Transmission wiring connection	
7	Power supply wiring connection	
6	Name plate	Note 1.
5	Ground terminal	M5(Inside Electric parts box)
4	Electric parts box	
3	Drain piping connection	PS1B Internal thread Major dia. φ33.349, Minor dia. φ30.391
2	Gas pipe connection	Attendant piping connection
1	Liquid pipe connection	Flare connection

3.2 Dimensions with Option

FXMQ125MFV1

Unit (mm)

Number	Name	Description
8	Drain hose	Attached to Drain pump kit
7	Water supply port	
6	Drain pipe connection (drain pump kit)	VP25(O.D φ32、I.D φ25)
5	Drain pump kit	Built-in
4	Long-life replacement filter	
3	High-eficiency filter	
2	Filter chamber	
1	VRV D.P. Unit C. duct type	

3D046155

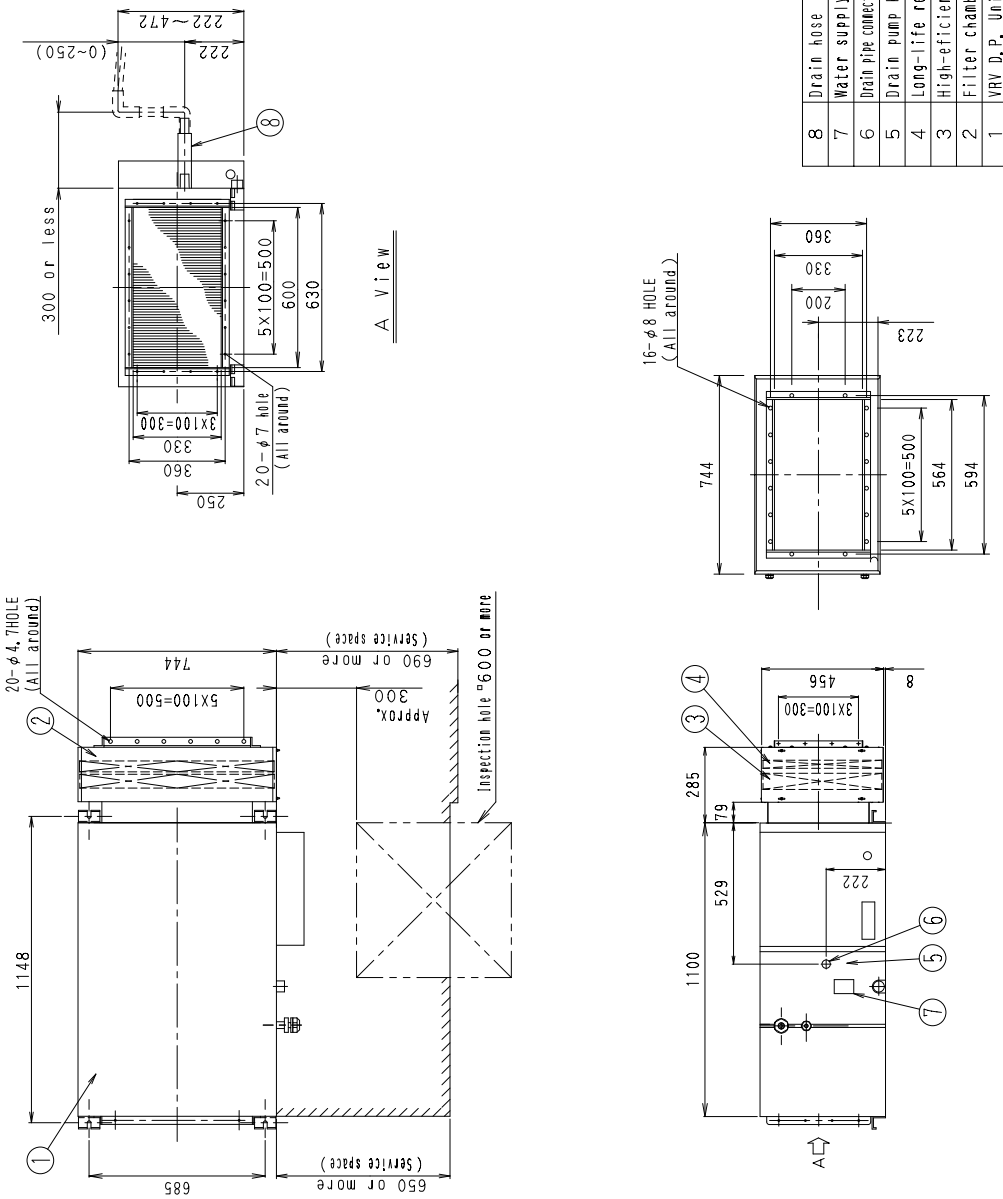

FXMQ200MFV1
FXMQ250MFV1

Unit (mm)

Number	Name	Description
8	Drain hose	Attached to Drain pump kit
7	Water supply port	
6	Drain pipe connection (drain pump kit)	VP25(O.D φ32, I.D φ25)
5	Drain pump kit	Builted-in
4	Long-life replacement filter	
3	High-eficiency filter	
2	Filter chamber	
1	VRV D.P. Unit C. duct type	

3D046154

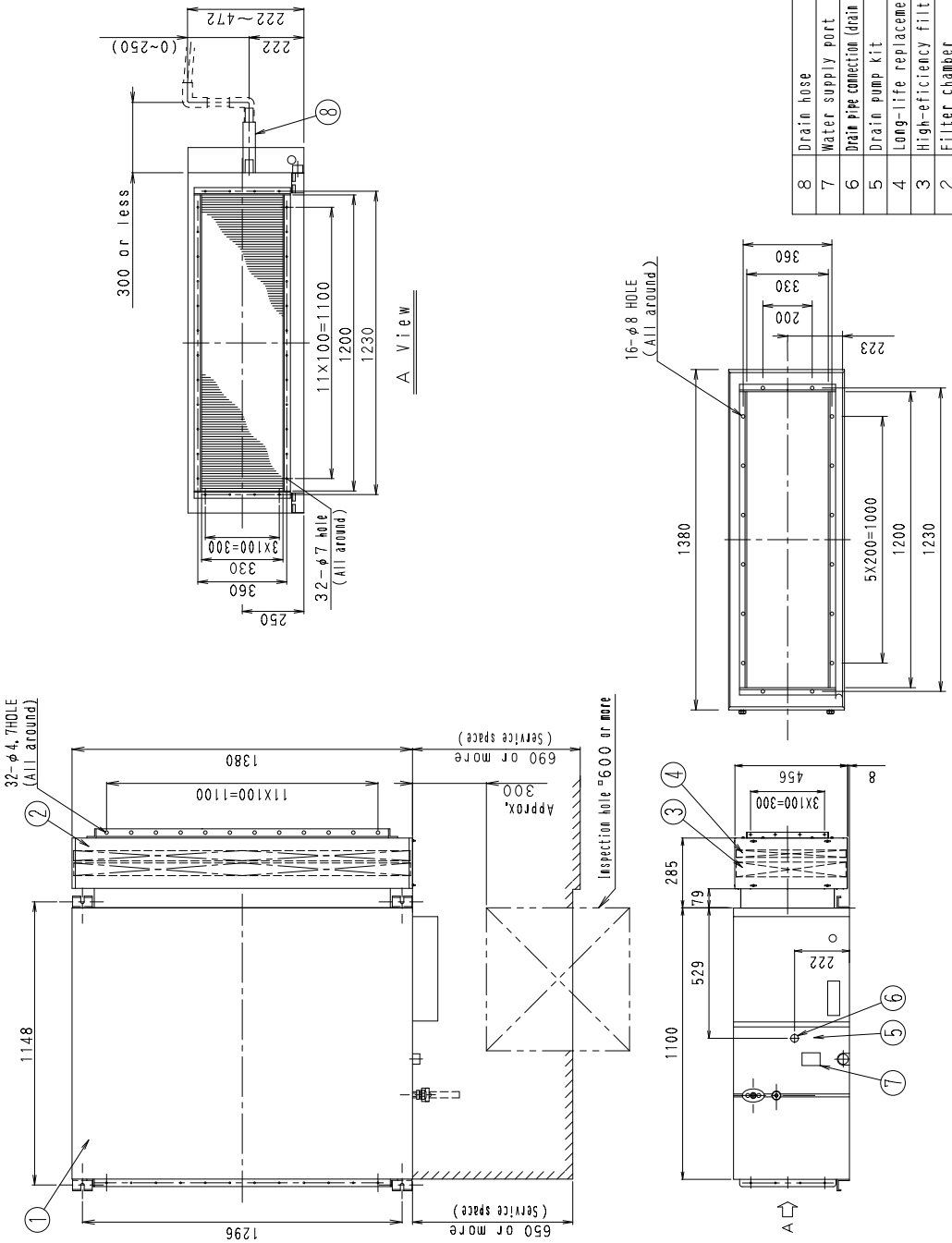

4. Piping Diagrams

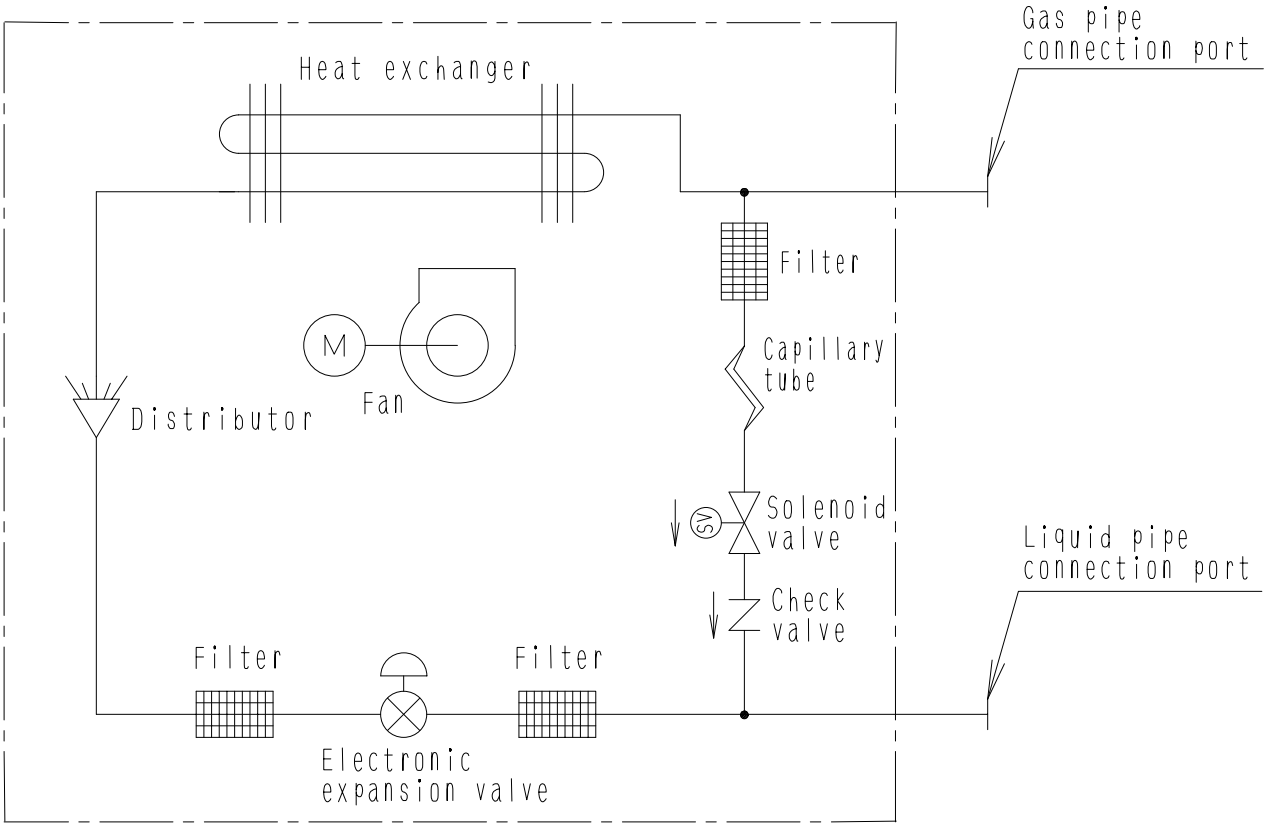

4D018650B

5. Wiring Diagrams

FXMQ125MFV1
FXMQ200MFV1
FXMQ250MFV1

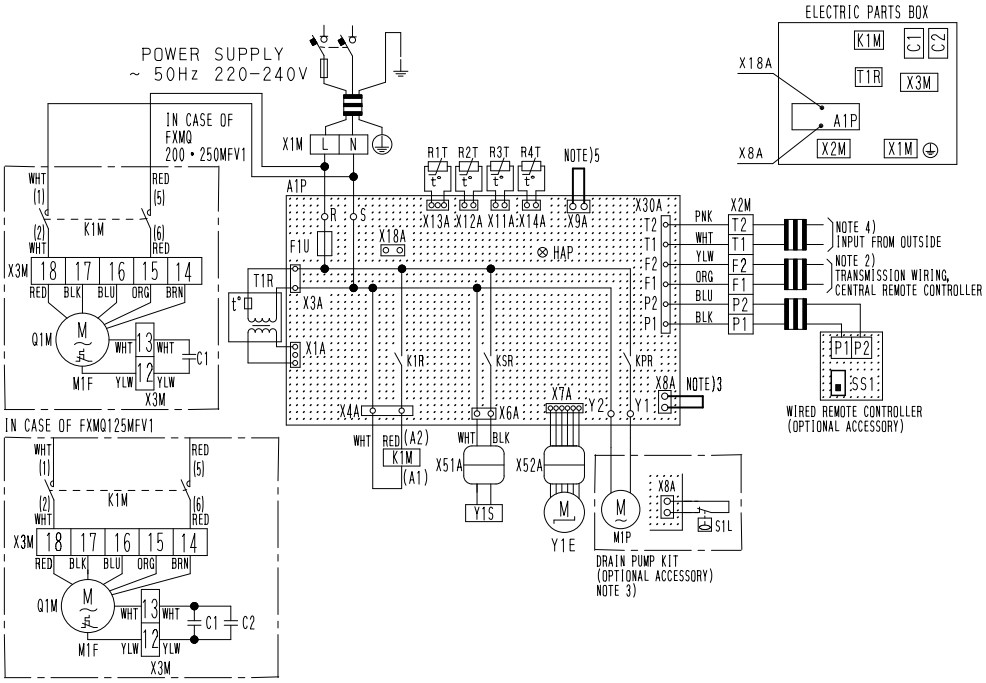

INDOOR UNIT		X1M	TERMINAL BLOCK(POWER)
A1P	PRINTED CIRCUIT BOARD	X2M	TERMINAL BLOCK(CONTROL)
C1, C2	CAPACITOR(M1F)	X3M	TERMINAL BLOCK
F1U	FUSE(B), 5A, 250V)(A1P)	X51A, X52A	CONNECTOR
HAP	LIGHT EMMITING DIODE	Y1E	ELECTRIC EXPANSION VALVE
	(SERVICE MONITOR-GREEN)	Y1S	SOLENOID VALVE(HOT GAS)
K1M	MAGNETIC RELAY(M1F)		
K1R	MAGNETIC RELAY(M1F)	OPTIONAL PARTS	
KPR	MAGNETIC RELAY(M1P)	M1P	MOTOR(DRAIN PUMP)
KSR	MAGNETIC RELAY(Y1S)	S1L	FLOAT SWITCH(DRAIN PUMP)
M1F	MOTOR(FAN)		
Q1M	THERMAL PROTECTOR	WIRED REMOTE CONTROLLER	
	(M1F EMBEDDED 135℃)	SS1	SELECT SWITCH(MAIN/SUB)
R1T	THERMISTOR(SUCTION AIR)		
R2T	THERMISTOR(COIL, LIQUID)	CONNECTOR FOR OPTIONAL PARTS	
R3T	THERMISTOR(COIL, GAS)	X18A	CONNECTOR(WIRING ADAPTOR
R4T	THERMISTOR(DISCHARGE AIR)		FOR ELECTRICAL APPENDICES)
T1R	TRANSFORMAR(220-240V/22V)		

NOTES)
1. ▭:TERMINAL BLOCK, ⊡ ,⊐ :CONNECTOR, —○— :TERMINAL,
   ⊡ :SHORT CIRCUIT CONNECTOR, ═▮═ :FIELD WIRING,
2. IN CASE USING CENTRAL REMOTE CONTROLLER, CONNNECT IT TO THE UNIT IN ACCORDANCE WITH THE ATTACHED INSTRUCTION MANUAL.
3. IN CASE INSTALLING THE DRAIN PUMP KIT, REMOVE THE SHORT CIRCUIT CONNECTOR OF X8A AND EXECUTE THE ADDITIONAL WIRING FOR FLOAT SWITCH AND DRAIN PUMP.
4. IN CASE CONNECTING THE INPUT WIRES FROM OUTSIDE, FORCED OFF OR ON/OFF CONTROL OPERATION CAN BE SELECTED BY REMOTE CONTROLLER.
   IN DETAILS, REFER TO THE INSTALLATION MANUAL ATTACHED TO THE UNIT.
5. DO NOT REMOVE SHORT CIRCUIT CONNECTOR OF X9A.

3D044996C

6. Capacity Tables

FXMQ125MFV1

Cooling

Outdoor tempreture	℃ WB							
℃ DB	15.0	17.0	20.0	23.0	26.0	28.0	30.0	32.0
	Capacity							
	kW	kW	kW	kW	kW	kW	kW	kW
20.0	3.6	3.8	–	–	–	–	–	–
22.0	3.6	3.8	5.1	–	–	–	–	–
25.0	3.6	3.8	5.1	6.8	–	–	–	–
27.0	–	3.8	5.1	6.7	–	–	–	–
29.0	–	–	5.1	6.7	11.0	–	–	–
31.0	–	–	5.0	6.6	10.9	14.1	–	–
33.0	–	–	5.0	6.5	10.8	14.0	16.4	–
35.0	–	–	–	6.4	10.7	13.9	16.3	17.4

Notes

1. The above capacities are based on the following conditions:
   Air discharge temperature setting: 18℃ for cooling operation,
   25℃ for heating (Factory setting)
   Equivalent piping length: 7.5m
   Level difference: 0m
2. The above capacities values are general average values which can be generated by each compressor operation level.
3. A value enclosed in ☐ means rated capacity.

4D046308

12

FXMQ200MFV1

Cooling

Outdoor tempreture	℃ WB							
	15.0	17.0	20.0	23.0	26.0	28.0	30.0	32.0
℃ DB	Capacity							
	kW	kW	kW	kW	kW	kW	kW	kW
20.0	5.7	6.1	–	–	–	–	–	–
22.0	5.7	6.1	8.2	–	–	–	–	–
25.0	5.7	6.1	8.2	10.8	–	–	–	–
27.0	–	6.1	8.1	10.7	–	–	–	–
29.0	–	–	8.1	10.6	17.6	–	–	–
31.0	–	–	8.0	10.5	17.4	22.6	–	–
33.0	–	–	8.0	10.3	17.3	22.4	26.2	–
35.0	–	–	–	10.2	17.1	22.2	26.1	27.8

Notes

1. The above capacities are based on the following conditions:
   Air discharge temperature setting: 18℃ for cooling operation,
   25℃ for heating (Factory setting)
   Equivalent piping length: 7.5m
   Level difference: 0m
2. The above capacities values are general average values which can be generated by each compressor operation level.
3. A value enclosed in ☐ means rated capacity.

4D046309

FXMQ250MFV1

Cooling

Outdoor tempreture	℃ WB							
℃ DB	15.0	17.0	20.0	23.0	26.0	28.0	30.0	32.0
	Capacity							
	kW	kW	kW	kW	kW	kW	kW	kW
20.0	7.1	7.6	–	–	–	–	–	–
22.0	7.1	7.6	10.2	–	–	–	–	–
25.0	7.1	7.6	10.2	13.5	–	–	–	–
27.0	–	7.6	10.1	13.4	–	–	–	–
29.0	–	–	10.1	13.3	22.0	–	–	–
31.0	–	–	10.0	13.1	21.8	28.2	–	–
33.0	–	–	10.0	12.9	21.6	28.0	32.8	–
35.0	–	–	–	12.8	21.4	27.8	32.6	34.8

Notes

1. The above capacities are based on the following conditions:
   Air discharge temperature setting: 18℃ for cooling operation,
   25℃ for heating (Factory setting)
   Equivalent piping length: 7.5m
   Level difference: 0m
2. The above capacities values are general average values which can be generated by each compressor operation level.
3. A value enclosed in ☐ means rated capacity.

4D046310

12

7. Operation Limit

FXMQ125MFV1

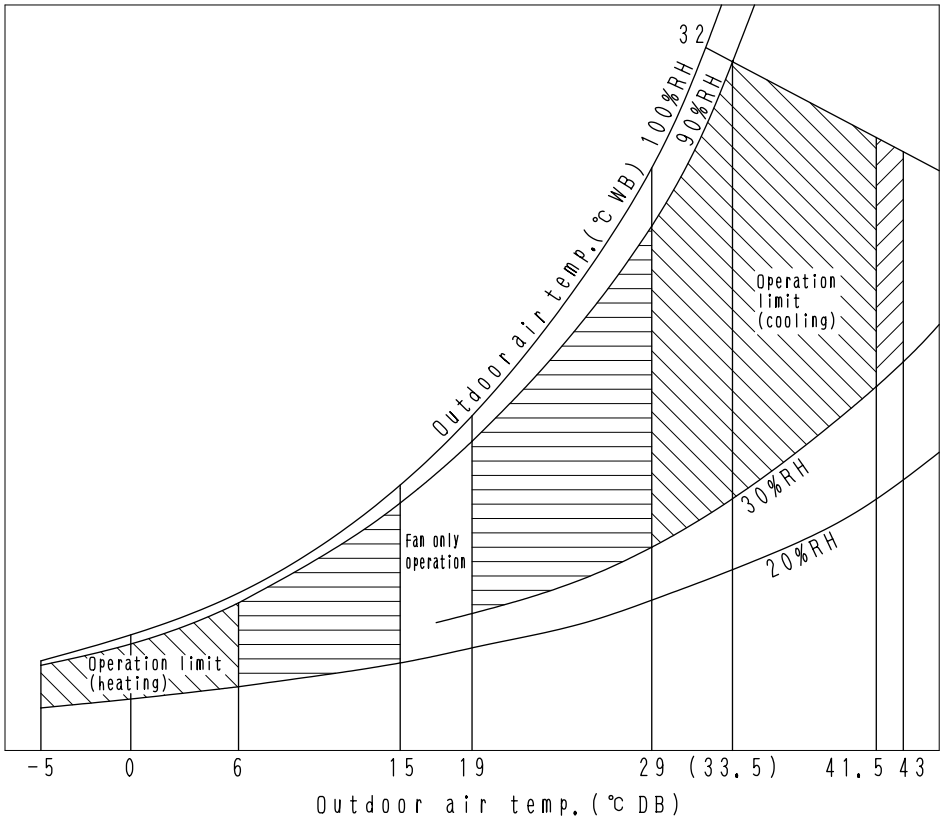

NOTE
1) These figures assume the following operating conditions.
(Indoor and outdoor units)
Equivalent pipe length: 7.5m
Level difference: 0m

2) ▭ :The discharge air temperature may not match the temperature setting for too large outdoor-air processing capacity. Thermostat OFF may be carried out.

3) ▨ :The discharge air temperature may not match the temperature setting for too small outdoor-air processing capacity.

4) The system will not operate in fan mode when the outdoor-air tempereture is 5℃ or below.

3D046312

FXMQ200MFV1

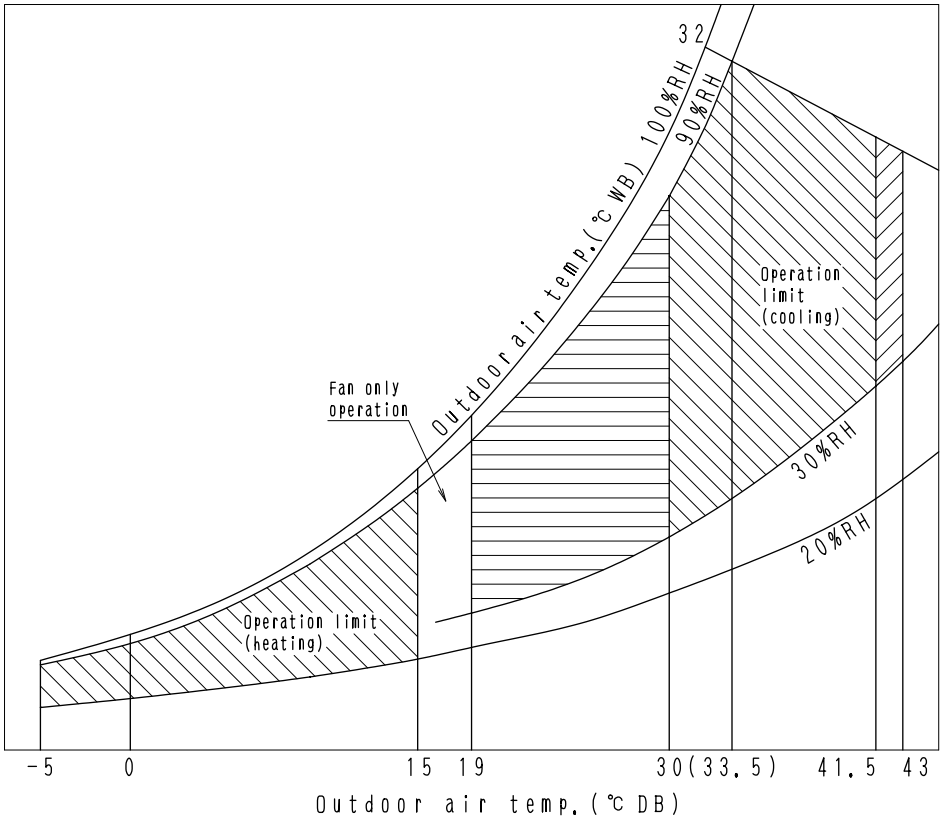

NOTE
1) These figures assume the following operating conditions.
(Indoor and outdoor units)
Equivalent pipe length: 7.5m
Level difference: 0m

2) ▭ :The discharge air temperature may not match the temperature setting for too large outdoor-air processing capacity. Thermostat OFF may be carried out.

3) ▨ :The discharge air temperature may not match the temperature setting for too small outdoor-air processing capacity.

4) The system will not operate in fan mode when the outdoor-air tempereture is 5℃ or below.

3D047750

FXMQ250MFV1

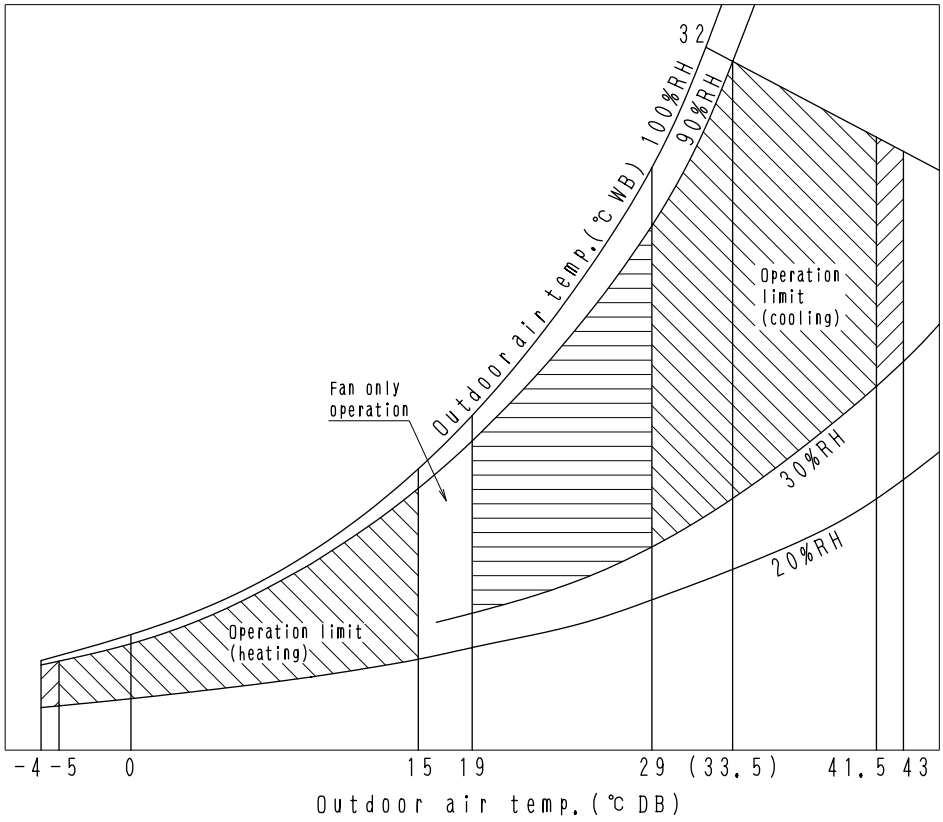

NOTE
1) These figures assume the following operating conditions.
(Indoor and outdoor units)
Equivalent pipe length: 7.5m
Level difference: 0m

2) ▤ :The discharge air temperature may not match the temperature setting for too large outdoor-air processing capacity. Thermostat OFF may be carried out.

3) ▨ :The discharge air temperature may not match the temperature setting for too small outdoor-air processing capacity.

4) The system will not operate in fan mode when the outdoor-air temperature is 5℃ or below.

3D046313

12

8. Electric Characteristics

Units					Power supply		IFM		Input(W)	
Model	Type	Hz	Volts	Voltage range	MCA	MFA	KW	FLA	Cooling	Heating
FXMQ125MFV1	V1	50	220-240	MAX. 264 Min. 198	1.9	15	0.380	1.5	359	359
FXMQ200MFV1					3.3	15	0.380	2.6	548	548
FXMQ250MFV1					3.8	15	0.380	3.0	638	638

Symbols:

MCA : Min. Circuit Amps (A)
MFA : Max. Fuse Amps (See note 5)
KW : Fan Motor Rated Output(KW)
FLA : Full Load Amps(A)
IFM : Indoor Fan Motor

Note:

1. Voltage range

   Units are suitable for use on electrical systems where voltage supplied to unit terminals is not below or above listed range limits.

2. Maximum allowable voltage unbalance between phases is 2%.

3. MCA/MFA

   MCA = 1.25 X FLA

   MFA ≦ 4 X FLA
   (Next lower standard fuse rating. Min.15A)

4. Select wire size based on the MCA.

5. Instead of fuse, use Circuit Breaker.

4D046146A

9. Sound Levels

Overall

Measuring Location

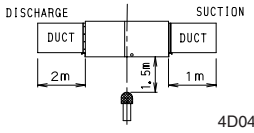

Notes:

1. The operating conditions are assumed to be standard (JIS conditions)
2. These operating values were obtained in a dead room (conversion values).
   Sound level will vary depending on a range of factors such as the construction (acoustic absorption coefficient) of the particular room in which the equipments installed.

dBA

Model	50Hz	
	220V	240V
FXMQ125MFV1	42	43
FXMQ200MFV1	47	48
FXMQ250MFV1	47	48

Octave Band Level

○———○ 220V

○- - - -○ 240V

FXMQ125MFV1

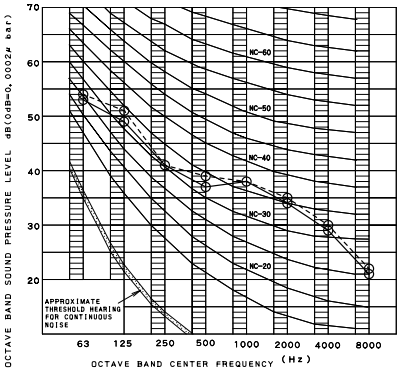

4D046271

FXMQ200MFV1

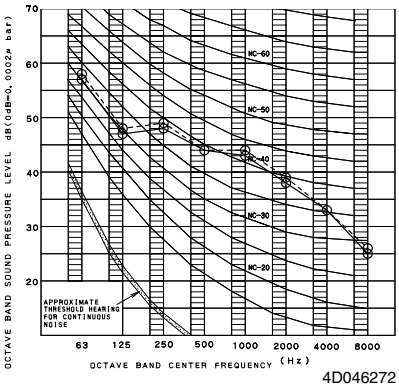

4D046272

FXMQ250MFV1

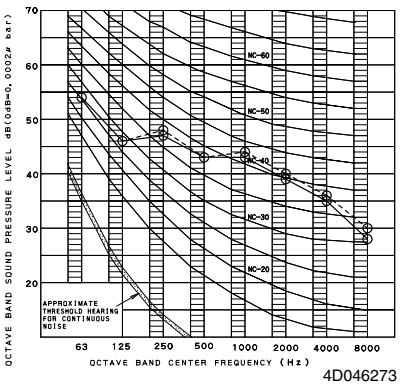

4D046273

12

10. Fan Performances

FXMQ125MFV1

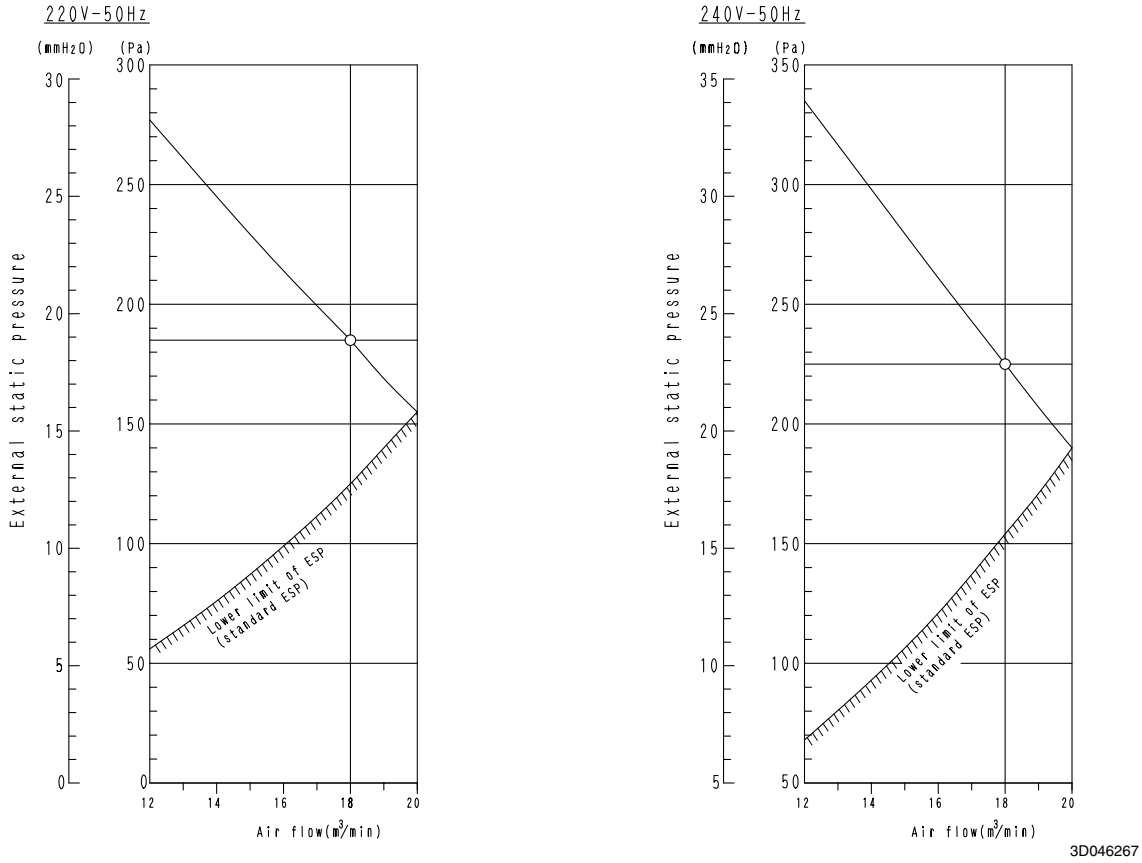

FXMQ200MFV1

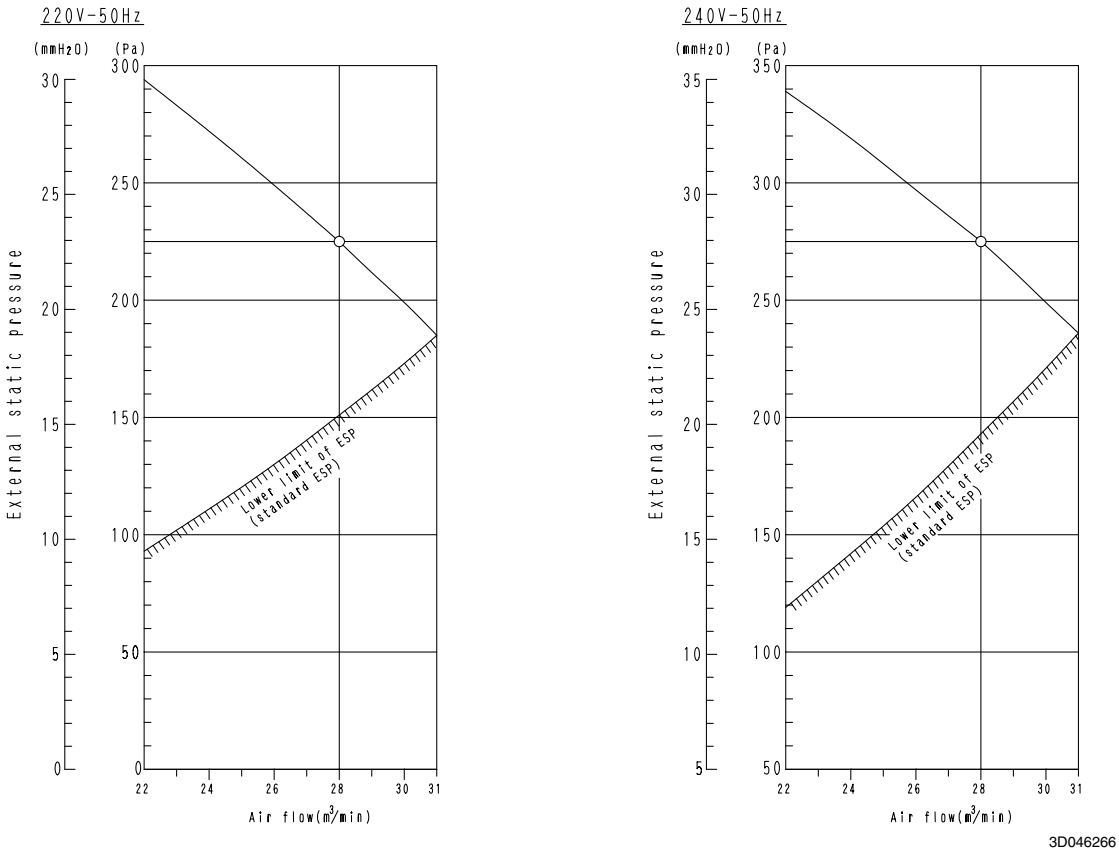

FXMQ250MFV1

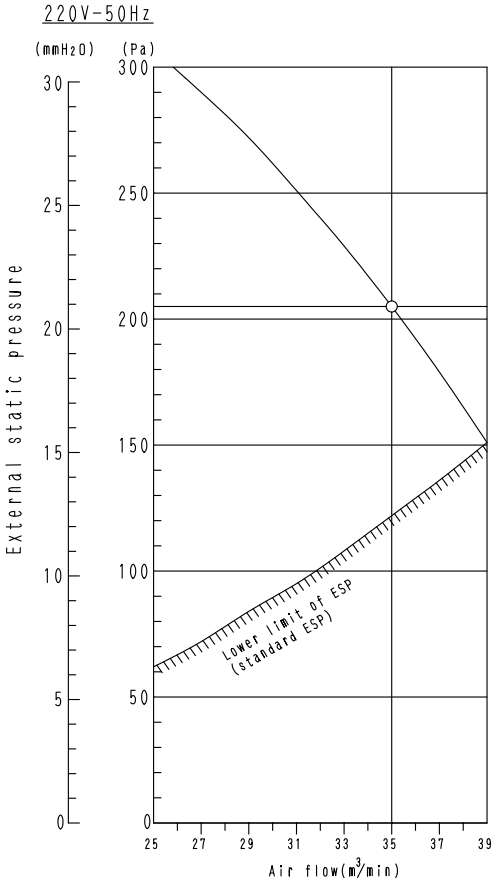

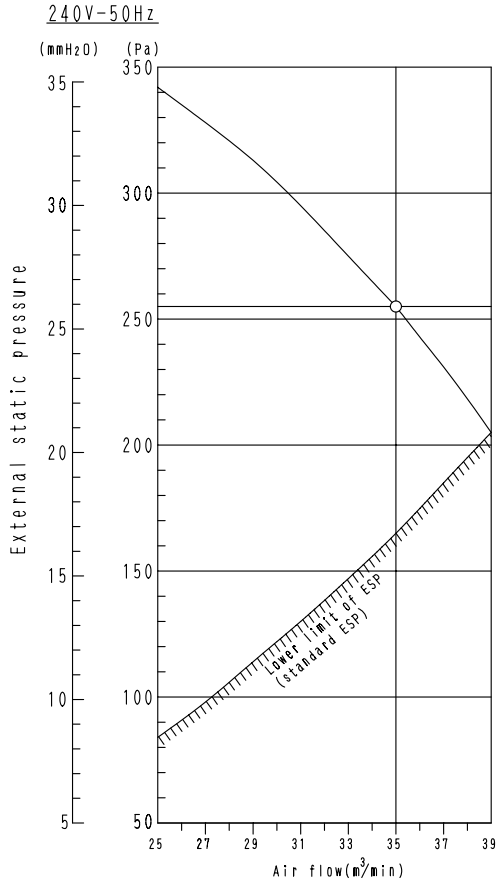

3D046265

12

11. Installation

Center of Gravity

FXMQ125MFV1
FXMQ200MFV1
FXMQ250MFV1

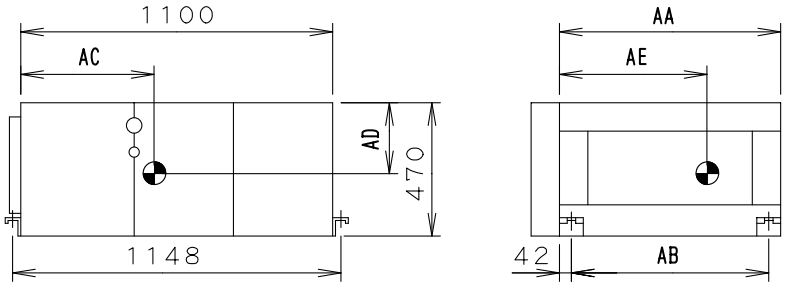

MODEL	PRODUCT WEIGHT (Mass)	AA	AB	AC	AD	AE
FXMQ125MFV1	86Kg	780	696	600	250	330
FXMQ200MFV1	123Kg	1380	1296	570	250	600
FXMQ250MFV1	123Kg	1380	1296	570	250	600

C: 4D046143B

Service Space

Selecting Installation Site

When it may exceed 30°C and RH80% in the ceiling or fresh air is inducted into the ceiling, an additional insulation (Thickness 10mm or more of glass wool or polyethylene form) is required.

1. Select an installation site where the following conditions are fulfilled and that meets with your customer's approval.

- Where is resistible against weight of the unit.
- In the upper space (including the back of the ceiling) of the unit where there is no possible dripping of water from the refrigerant pipe, drain pipe, water pipe, etc.
- Where optimum air distribution can be ensured.
- Where nothing blocks the air passage.
- Where condensate can be properly drained.
- If supporting structural members are not strong enough to take the unit's weight, the unit could fall out of place and cause serious injury.
- Where the false ceiling is not noticeably on an incline.
- Where there is no risk of combustible gas leakage.
- Where sufficient clearance for maintenance and service can be ensured. **(Refer to Fig. 1)**
- Where the total piping length involving indoor unit and outdoor unit is below the allowable piping length. (See the installation manual included with the outdoor unit for "Refrigerant Piping Work")
- Locations where a maintenance hole can be installed. **(Refer to Fig. 2)**

CAUTION

- Install the indoor and outdoor units, power supply wires and transmission wires at least 1 meter away from televisions or radios in order to prevent image interference or noise.
  (Depending on the radio waves, a distance of 1 meter may not be sufficient enough to eliminate the noise.)

2. Use suspension bolts for installation. Check whether the ceiling is strong enough to support the weight of the unit or not. If there is a risk, reinforce the ceiling before installing the unit.

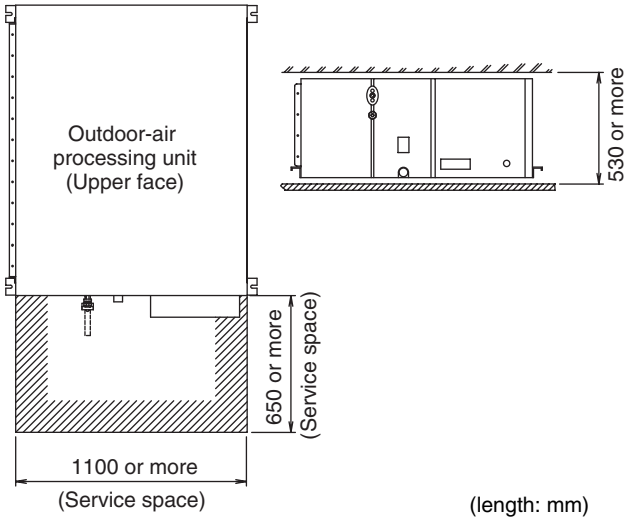

Fig. 1

Bolt Pitch

Preparations Before Installation

1. Relative positions of the unit and suspension bolt. (Refer to Fig. 2).

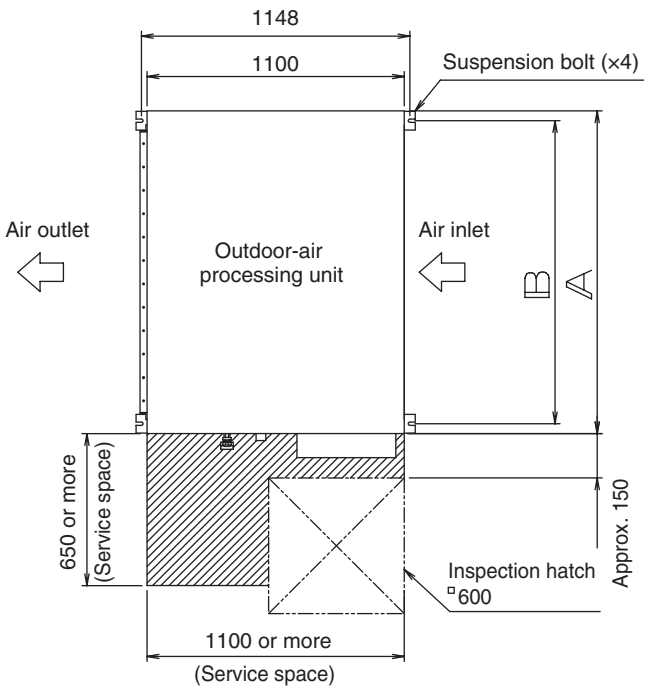

Unit	A	B
FXMQ125MFV1	744	685
FXMQ200·250MFV1	1380	1296

Fig. 2 (length: mm)

2. Install a canvas duct to the air outlet and air inlet so that vibration from the unit isn't transmitted to the duct or ceiling. You should also apply acoustic (insulation material) to the inside of the duct, and vibration insulation rubber to the suspension bolts.
3. Open the installation hole. (Pre-set ceilings)
   - Once the installation hole is opened in the ceiling where the unit is to be installed, pass refrigerant and drain pipe and the power supply, transmission, and remote controller wire to the unit's pipe and wire connection ports.
   - After opening the ceiling hole, it might be necessary to reinforce the ceiling frame to prevent shaking or to maintain the levelness of the ceiling.
     Consult an architect or carpenter for details.
4. Install suspension bolts.
   (Use bolts of 10 mm diameter.)
   - Install the unit where supporting structures are strong enough to bear the unit's weight. Use embedded inserts or anchor bolts with new buildings and hole-in-anchors with old buildings. Adjust the distance to the ceiling beforehand.

〈Installation example〉

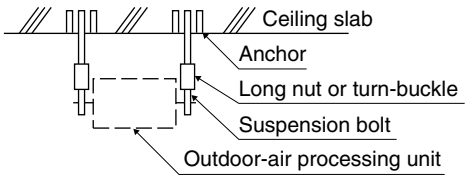

Note) All the above parts are field supplied.

Fig. 3

Installation

Unit Installation

Installing optional accessories before installing the unit is easier. See the installation manuals included with the optional accessories.

As for the parts to be used for installation work, be sure to use the provided accessories and specified parts designated by our company.

1. Temporarily install the unit.

■ Mount the hanger brackets to suspension bolts. Secure the hanger brackets on the top and the bottom with nuts <1>~<3> (M10, field supplied) and washers (M10, accessory 9)).

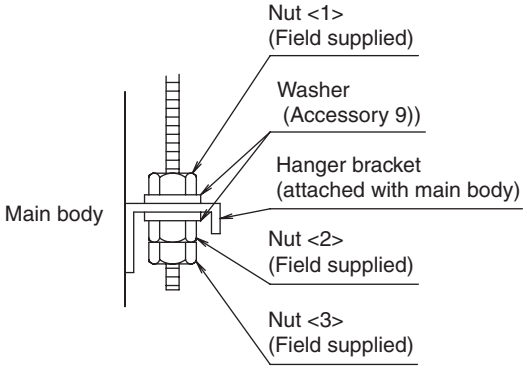

Fig. 4

2. Adjust the height of the unit with the nut <2>.
   (Refer to Fig. 4)
3. Make sure the unit is level.

■ Use a level or a vinyl tube filled with water to make sure that the unit is level and that the tilt (downward slope) to the drain socket and air inlet side is within 1°.
(Refer to Fig. 5)

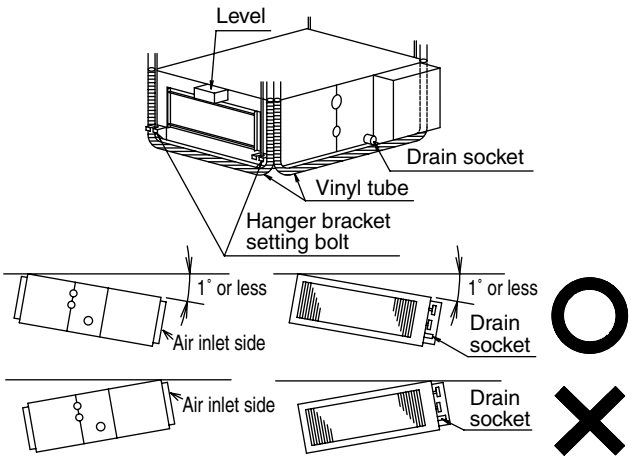

Fig. 5

4. Tighten both upper and lower nuts <1>, <3>.
   (Refer to Fig. 4)
5. Insulate the four hanger brackets with the sealing pad. (accessory 5) Insulate the hanger brackets so that the surface and edges of the hanger brackets cannot be seen. **(Refer to Fig. 6)**

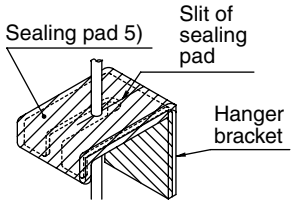

Fig. 6

CAUTION

Setting the unit at an angle opposite to the drain socket or air inlet side might cause leaks.

Refrigerant Piping Work

<For refrigerant piping between outdoor unit and this unit, see the installation manual attached to the outdoor unit. (Refer to Table 1)>
<Execute heat insulation work completely on both sides of the gas pipe and the liquid pipe. Otherwise, a water leakage can result sometimes.>
<When using a heat pump, the temperature of the gas pipe can reach up to approximately 120°C, so use insulation which is sufficiently resistant.>
<Improve the insulation on the refrigerant piping depending on the installation environment. If the insulation is not sufficient, condensate may form on the surface of the insulation.>
<Before refrigerant piping work, check which type of refrigerant is used. Proper operation is not possible if the types of refrigerant are not the same.>

CAUTION

- **Use a pipe cutter and flare suitable for the type of refrigerant.**
- **Apply ester oil or ether oil around the flare portions before connecting. (Refer to Fig. 7)**
- **To prevent dust, moisture or other foreign matter from infiltrating the tube, either pinch the end or cover it with tape.**
- **Do not allow anything other than the designated refrigerant to get mixed into the refrigerant circuit, such as air, etc. If any refrigerant gas leaks while working on the unit, ventilate the room thoroughly right away.**

- The outdoor unit is charged with refrigerant.
- Be sure to use both a spanner and torque wrench together, as shown in the drawing, when connecting or disconnecting pipes to/from the unit. **(Refer to Fig. 8)**
- Refer to Table 2 for the dimensions of flare nut spaces.
- When connecting the flare nut, coat the flare section (both inside and outside) with ester oil or ether oil, rotate three or four times first, then screw in. **(Refer to Fig. 7)**
- Refer to Table 2 for tightening torque.

Table 1

Unit to be connected	Gas pipe diameter	Liquid pipe diameter
FXMQ125MFV1	15.9	ϕ9.5
FXMQ200MFV1	19.1 Use attached pipe.	ϕ9.5
FXMQ250MFV1	22.2 Use attached pipe.	ϕ9.5

Table 2

Pipe size	Tightening torque	Flare dimensions A (mm)	Flare shape
ϕ9.5 (3/8")	32.7 – 39.9N·m (333 – 407 kgf·cm)	12.8 – 13.2	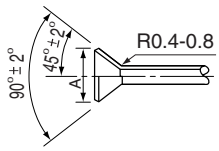
ϕ15.9 (5/8")	61.8 – 75.4N·m (630 – 770 kgf·cm)	19.3 – 19.7	

Note:
Use the flare nuts attached with the unit.

CAUTION

Over-tightening may damage the flare and cause a refrigerant leakage.

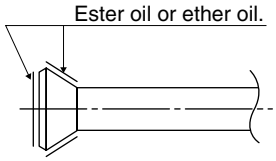

Fig. 7

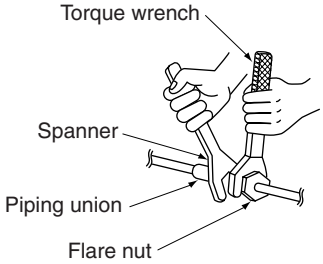

Fig. 8

Not recommendable but in case of emergency

You must use a torque wrench but if you are obliged to install the unit without a torque wrench, you may follow the installation method mentioned below.

After the work is finished, make sure to check that there is no gas leak.

When you keep on tightening the flare nut with a spanner,
there is a point where the tightening torque suddenly increases. From that position, further tighten the flare nut the angle shown below:

Table 3

Pipe size	Further tightening angle	Recommended arm length of tool
9.5 (3/8”)	60 to 90 degrees	Approx. 200mm
15.9 (5/8”)	30 to 60 degrees	Approx. 300mm

■ After checking the pipe-connection for gas leakage, be sure to insulate the liquid and gas pipe, referring to Fig.9, 10 and the following points.

FXMQ125MFV1

1. Insulate the liquid and gas pipes using the insulation for fitting (Accessory 2), 3))
   (Tighten both edges with clamping material.)
2. Make sure the insulation for fitting (Accessory 3)) on the gas pipe has its seams facing up.
3. For the gas pipe, wrap the sealing pad (Accessory 4)) around the insulation for fitting (Accessory 3)) (flare nut part).

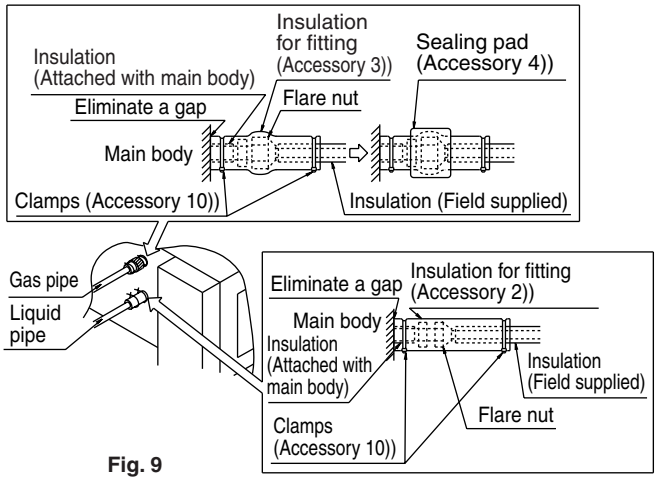

Fig. 9

FXMQ200 · 250MFV1

1. Insulate the liquid pipe using the insulation for fitting (Accessory 2)).
   (Tighten both edges with clamping material.)
2. Use the attached pipe (Accessory 1)) for connecting the gas pipes and make sure to insulate the gas pipes (using field supplied insulation) all the way to the base where they connect to the unit.
3. The turning torque of the hexagon head bolts (Accessory 7)) to connect the attached pipe (Accessory 1)) to the unit is 21.5 – 28.9 N/m.

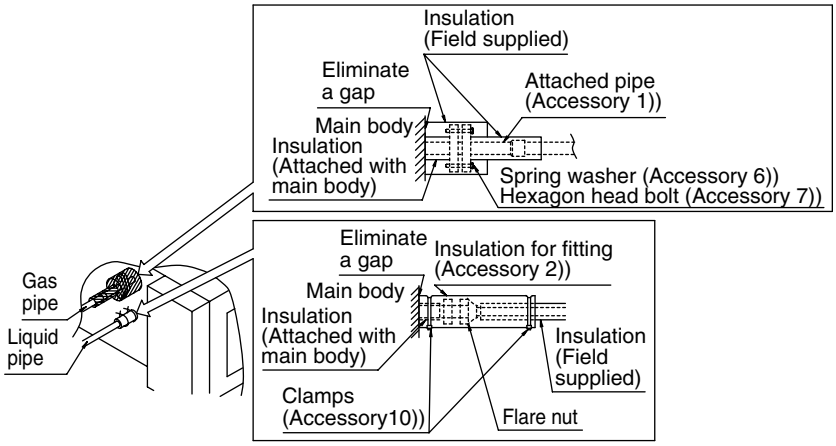

Fig. 10

12

CAUTION

Be sure to insulate any field pipe all the way to the pipe connection inside the unit. Any exposed pipe may cause condensate or burns if touched.

CAUTION

CAUTION TO BE TAKEN WHEN BRAZING REFRIGERANT PIPING

Do not use flux when brazing refrigerant piping. Therefore, use the phosphor copper brazing filler metal (BCuP-2:JIS z 3264/B-Cu93P-710/795: ISO 3677) which does not require flux.
(Flux has extremely harmful influence on refrigerant piping systems. For instance, if the chlorine based flux is used, it will cause pipe corrosion or, in particular, if the flux contains fluorine, it will damage the refrigerant oil.)

- Before brazing local refrigerant piping, nitrogen gas shall be blown through the piping to expel air from the piping. If your brazing is done without nitrogen gas blowing, a large amount of oxide film develops inside the piping, and could cause system malfunction.
- When brazing the refrigerant piping, only begin brazing after having carried out nitrogen substitution or while inserting nitrogen into the refrigerant piping. Once this is done, connect the unit with a flared or a flanged connection.
- Nitrogen should be set to 0.02 MPa (0.2 kg/cm^2) with a pressure-reducing valve if brazing while inserting nitrogen into the piping.

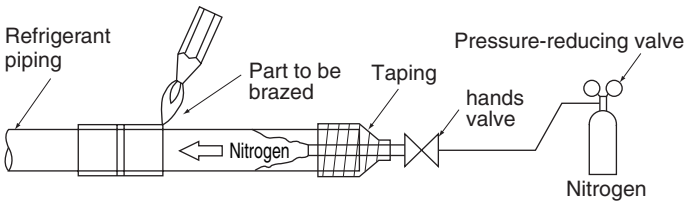

Fig. 11

Drain Piping Work

<<Rig the drain pipe as shown below and take measures against condensate. Improperly rigged piping could lead to leaks and eventually wet furniture and belongings.>>
<<Insulate the drain pipes inside the building and the drain sockets.>>

1. Carry out the drain piping.

- The drain pipe should be short with a downward slope lower than 1/100 and should prevent air pockets from forming.
- The diameter of the pipe is the same as that of the connecting pipe (PS1B), and should be kept equal to or greater than that of the connecting pipe.

Note:

- If converging multiple drain pipes, install according to the procedure shown below. (Select an appropriate central drain pipe thickness for the units they will be connected to.)

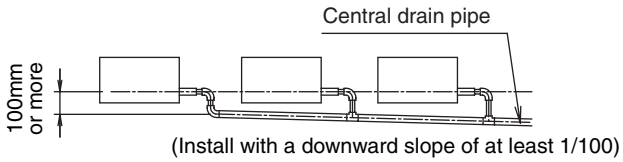

Fig. 12

2. After piping work is finished, check drainage flow smoothly.

- Open the water supply port, add approximately 1 litter of water slowly into the drain pan and check drainage flow. **(Refer to Fig. 13)**
  Pools of drainage can cause the drain pipes to clog.

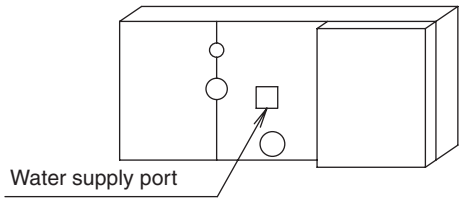

Fig. 13

12

CAUTION

- Do not connect the drain pipe directly to sewage pipes that smell of ammonia. The ammonia in the sewage might enter the unit through the drain pipes and corrode the heat exchanger.

Electric Wiring Work

GENERAL INSTRUCTIONS

- All field supplied parts and materials and electric works must conform to local codes.
- Use copper wire only.
- For electric wiring work, refer to also “WIRING DIAGRAM” label attached to the electric parts box lid.
- For remote controller wiring details, refer to the installation manual attached to the remote controller.
- All wiring must be performed by an authorized electrician.
- This system consists of multiple indoor units. Mark each indoor unit as unit A, unit B..., and be sure the terminal board wiring to the outdoor unit is properly matched. If wiring and piping between the outdoor unit and the indoor unit are mismatched, the system may cause a malfunction.
- A circuit breaker capable of shutting down power supply to the entire system must be installed.
- Refer to the installation manual attached to the outdoor unit for the size of power supply wire connected to the outdoor unit, the capacity of the circuit breaker and switch, and wire instructions.
- Be sure to ground the unit.
- Do not connect the ground wire to gas and water pipes, lightning rods, or telephone ground wires.
  - Gas pipes : might cause explosions or fire if gas leaks.
  - Water pipes : no grounding effect if hard vinyl piping is used.
  - Telephone ground wires or lightning rods : might cause abnormally high electric potential in the ground during lightning.

ELECTRICAL CHARACTERISTICS

Units				Power supply		Fan motor	
Model	Hz	Volts	Voltage range	MCA	MFA	KW	FLA
FXMQ125MFV1	50	220 - 240	Max. 264 Min. 198	1.9	15	0.380	1.5
FXMQ200MFV1				3.3	15	0.380	2.6
FXMQ250MFV1				3.8	15	0.380	3.0

MCA: Min. Circuit Amps (A); MFA: Max. Fuse Amps (A)
KW: Fan Motor Rated Output (kW); FLA: Full Load Amps (A)

SPECIFICATIONS FOR FIELD SUPPLIED FUSES AND WIRE

Model	Power supply wiring			Transmission wiring	
	Field fuses	Wire	Size	Wire	Size
FXMQ125MFV1	15A	H05VV-U3G	Size must comply with local codes.	Sheathed wire (2 wire)	0.75 - 1.25 mm²
FXMQ200MFV1					
FXMQ250MFV1					

NOTES

1. Select the particular size of electrical wire for power supply wire in accordance with the standards of the given nation and region.
2. Allowable length of transmission wire between indoor/out-door units and between the indoor unit and the remote con-troller is as follows.
   (1) Outdoor unit – Indoor unit:
   Max. 1000 m (Total wiring length: 2000 m)
   (2) Indoor unit – Remote controller:
   Max. 500 m
   (3) Max. branches No. of branches :16
3. Insulated thickness: 1mm or more
4. Up to 16 branches are possible for unit-to unit cabling. No branch is allowed after first branch. **(Refer to Fig. 15)**

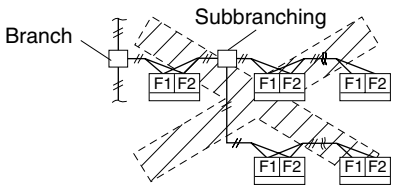

Fig. 15

Wiring Example And How To Set The Remote Controller

HOW TO CONNECT WIRINGS (Remove the electric parts box lid and wire as shown in the figure below.)

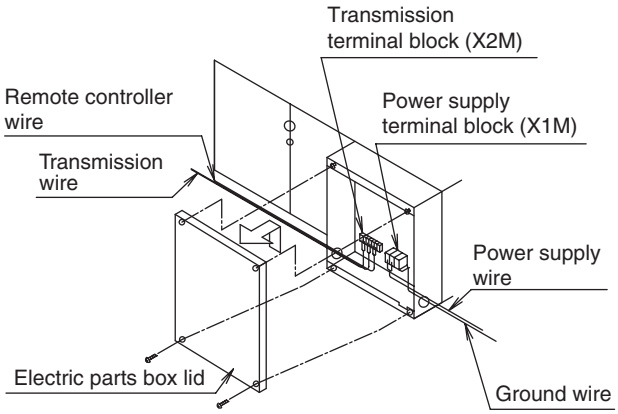

Fig. 16

- **Power supply wire, Ground wire (Refer to Fig. 17)**
  Connect the wire to L and N on the power supply terminal block (X1M). Also, connect the ground wire to the ground terminal. Take the power supply wire and the ground wire into the unit through the wiring through hole <1>, and firmly secure them together using the clamp (Accessory 10)).
- **Transmission wire, Remote controller wire (Refer to Fig. 17)**
  Connect the transmission wire to F1 and F2 on the transmission terminal block (X2M). Connect the remote controller wire to P1 and P2 on the transmission terminal block (X2M). Take them into the unit through the wiring through hole <2>, and firmly secure the wires using the clamp (Accessory 10)).

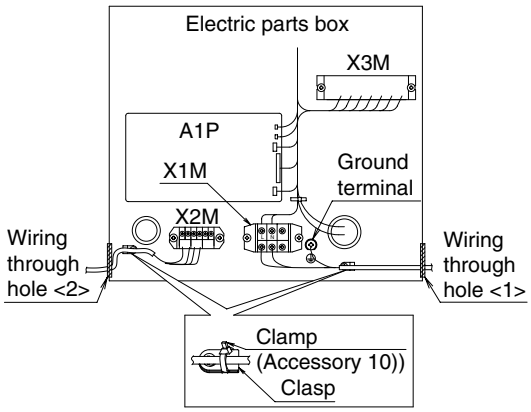

Fig. 17

CAUTION

- Wire the electric parts box so that the wiring is at least 10 mm above the bottom of the electric parts box.
- Be sure to attach the sealing material or putty (field supplied) to the wiring through holes to prevent the infiltration of water as well as any insects and other small creatures from outside. Other-wise a short-circuit may occur inside the electric parts box.
- When clamping the wires, be sure no pressure is applied to the wire connections by using the included clamping material to make appropriate clamps. Also, when wiring, make sure the lid on the electric parts box fits snugly by arranging the wires neatly and attaching the electric parts box lid firmly. When attaching the electric parts box lid, make sure no wires get caught in the edges. Pass wire through the wiring through holes to prevent damage to them.
- Make sure the remote controller wire, the transmission wire and power supply wire, ground wire do not pass through the same locations outside of the unit, separating them by at least 50mm, otherwise electrical noise (external static) could cause mistaken operation or breakage.

PRECAUTIONS

1. Use round crimp-style terminals for connecting wires to the power supply terminal block. If unavailable, observe the following points when wiring.

- Do not connect wires of different gauge to the same power supply terminal. (Looseness in the connection may cause overheating.)
- Use the specified electric wire. Connect the wire securely to the terminal. Lock the wire down without applying excessive force to the terminal.

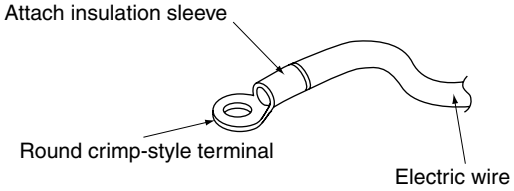

2. Tightening torque for the terminal screws.

- Use the correct screwdriver for tightening the terminal screws. If the blade of screwdriver is too small, the head of the screw might be damaged, and the screw will not be properly tightened.
- If the terminal screws are tightened too hard, screws might be damaged.

■ Refer to the table below for the tightening torque of the terminal screws.

Terminal	Size	Tightening torque
Transmission terminal block (X2M)	M3.5	0.79 – 0.97 N·m
Power supply terminal block (X1M)	M4	1.18 – 1.44 N·m
Ground terminal	M5	3.02 – 4.08 N·m

3. Do not connect wires of different gauge to the same ground terminal. Looseness in the connection may deteriorate protection.
4. Outside of the unit, keep transmission wire and remote controller wire at least 50 mm away from power supply wire and ground wire. The unit may malfunction if subjected to electrical noise (external static).
5. For remote controller wiring, refer to the “INSTALLATION MANUAL OF REMOTE CONTROLLER” attached to the remote controller.
6. Never connect power supply wire to the transmission terminal block (X2M). A mistake of the sort could damage the entire system.
7. Use only specified wire and tightly connect wires to terminals. Be careful wires do not place external stress on terminals. Keep wiring in neat order and so as not to obstruct other equipment such as the electric parts box lid. Make sure the lid closes tight. Incomplete connections could result in overheating, and in worse case, electric shock or fire.

WIRING EXAMPLE

Fit the power supply wiring of each unit with a switch and fuse as shown in the drawing.

COMPLETE SYSTEM EXAMPLE (3 SYSTEMS)

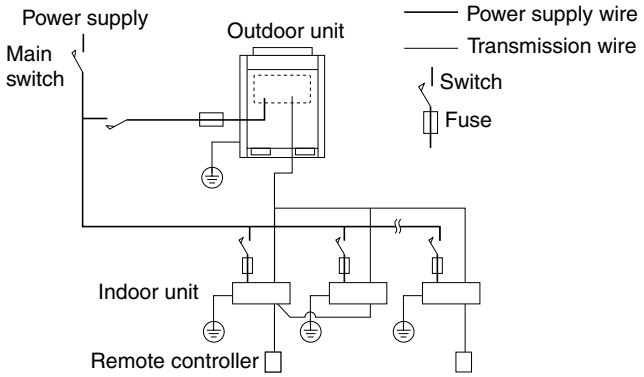

Fig. 18

1. When using 1 remote controller for 1 indoor unit. (Normal operation)

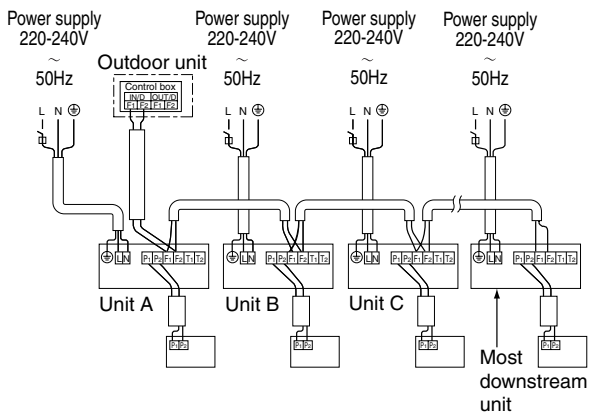

Fig. 19

2. For group control or control by 2 remote controllers

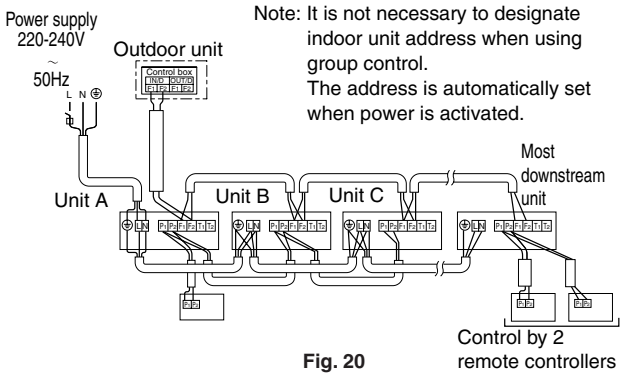

Fig. 20

[PRECAUTIONS]

1. A single switch can be used to supply power to units on the same system. However, branch switches and branch circuit breakers must be selected carefully.

Name of Each Part

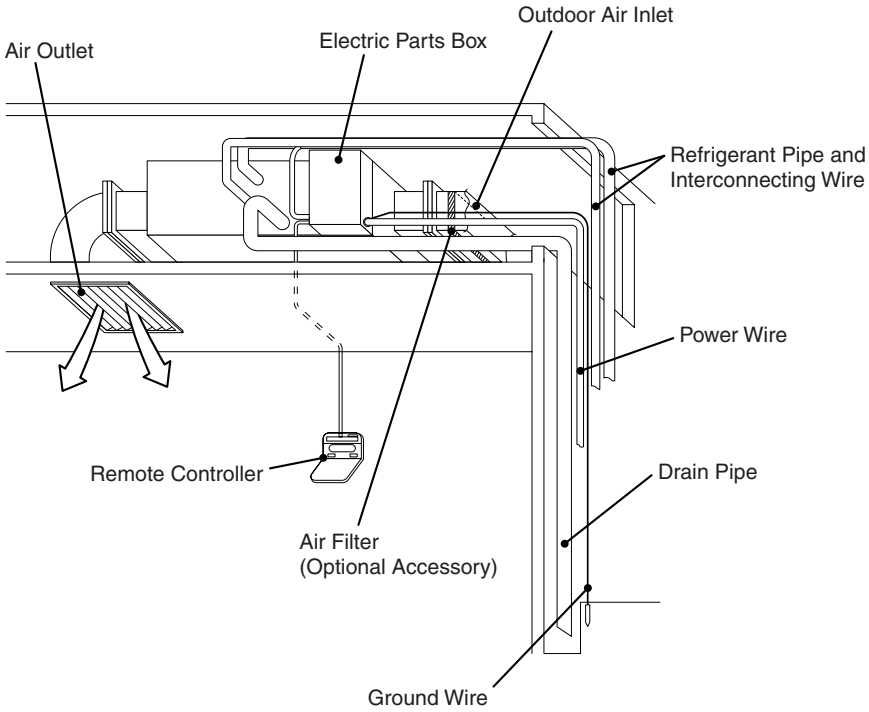

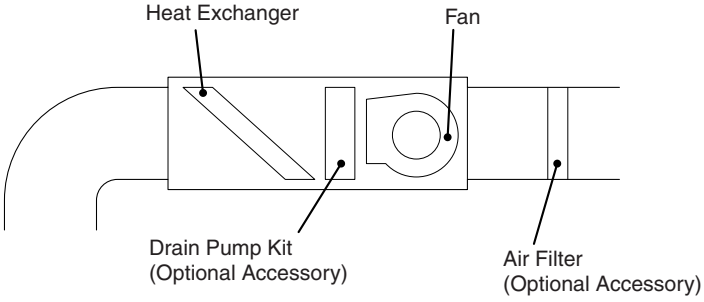

3P086155-6G-3

Operation Range

Use the system in the following temperature and humidity ranges for safe and effective operation.

COOLING [°C]

OUTDOOR TEMPERATURE		
TEMPERATURE		HUMIDITY
DB	19 to 43 (Notes)	30% to 90% Long time operation in a humidity over 90% may cause condensation on the unit and dripping.
WB	32 or below	

DB: Dry Bulb Temperature
WB: Wet Bulb Temperature

Notes:

- The FAN OPERATION mode is set automatically for DB temperatures of 19°C and below.
- Do not use the COOLING OPERATION or FAN OPERATION modes when outdoor temperature is 5°C or lower. The unit will stop running to protect itself against cold damage. In such case, set the AUTOMATIC OPERATION or HEATING OPERATION mode.

HEATING [°C]

OUTDOOR TEMPERATURE	
DB	-5 to 15 (Note)

DB: Dry Bulb Temperature

Note:

The FAN OPERATION mode is set automatically for DB temperature of 15°C and above.

If the temperature or the humidity is beyond these conditions, safety devices may work and the air conditioner may not operate.

■ Restrictions in case of mixture connection with standard indoor units

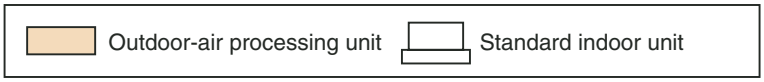

1. Restrictions of the refrigerant piping system

1) The total capacity of standard indoor units + Outdoor-air processing units should be **50-100%** of Outdoor unit capacity. (In case of using only outdoor-air processing units, it is same.)

2) The capacity of outdoor-air processing units should be less than **30%** of the outdoor unit capacity.

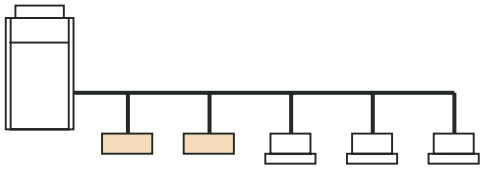

2. Restrictions of the control system

1) In case of wiring is mixed with standard indoor units, group control by remote controller is not available, because the setting temperature are different.

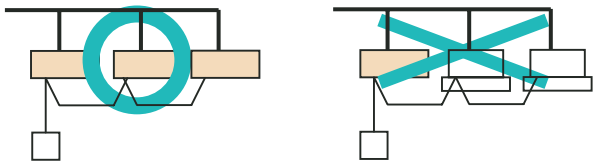

2) When using the central remote controller, mixture of indoor units & Outdoor-air Processing units in the same zone is not available, because the setting temperature are different.

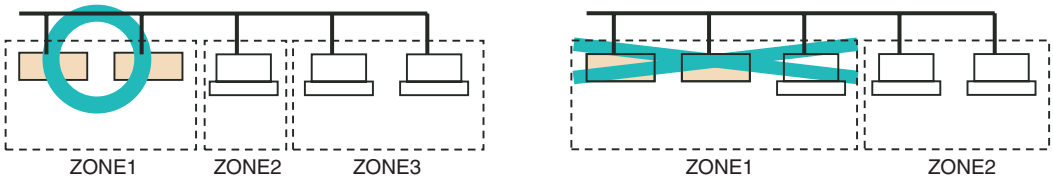

3) Don't set the R/C of Outdoor-air processing unit as the master remote controller.

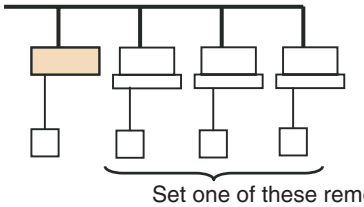

Set one of these remote controllers as the master remote controller.

12. Accessories

Standard Accessories

Name	Attached pipe	Insulation for fitting	Sealing pad	Sealing pad	Others
Quantity	1	1 each	1	4	
Shape	1) 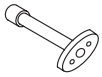 (Only FXMQ200 · 250MFV1)	2) for liquid pipe 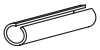 Inside diameter ϕ25.4 3) for gas pipe 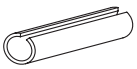 Inside diameter ϕ31.8 (Only FXMQ125MFV1)	4) 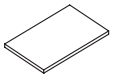 (Only FXMQ125MFV1)	5) 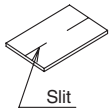	6) Spring washer (M10) (2 pieces only for FXMQ200 · 250MFV1) 7) Hexagon head bolt (M10×40) (2 pieces only for FXMQ200 · 250MFV1) 8) Screws for flange connection (M5) (16 pieces for FXMQ125MFV1, 28 pieces for FXMQ200 250MFV1) 9) Washers (8 pieces) 10)Clamps (6 pieces) 11)Installation manual 12)Operation manual

3P086156-11Q-2

Optional Accessories (For Unit)

No.	Item \ Type		FXMQ125MFV1	FXMQ200MFV1	FXMQ250MFV1
1	Drain pump kit		KDU30L250VE		
2	High efficiency filter	65%	KAFJ372L140	KAFJ372L280	
		90%	KAFJ373L140	KAFJ373L280	
3	Filter chamber ★1		KDJ3705L140	KDJ3705L280	
4	Long life replacement filter		KAFJ371L140	KAFJ371L280	

3D046270

Notes:

★1.Filter chamber has a suction-type flange. (Main unit does not have.)
- Dimensions and weight of the equipment may vary depending on the options used.
- Some options may not be usable due to the equipment installation conditions, so please confirm prior to ordering.
- Some options may not be used in combination.
- Operating sound may increase somewhat depending on the options used.

12

Optional Accessories (For Operation Controls)

No.	Item \ Type	FXMQ-MF
1	Wired remote controller	BRC1C62
2	Central remote controller	DCS302CA61
3	Unified ON/OFF controller	DCS301BA61
4	Schedule timer	DST301BA61
5	Wiring adaptor for electrical appendices (1)	KRP2A61
6	Wiring adaptor for electrical appendices (2)	KRP4A51
7	Adaptor for wiring	KRP1B61

Part 4
Outdoor Units Normal Series (Space Saving Series)

RXQ-P

Cooling Only (50Hz) Normal Series (Space Saving Series) 373

RXQ-P
Cooling Only (50Hz)
Normal Series
(Space Saving Series)

1. Specifications 374
   1.1 Cooling Only 50Hz-Normal Series (Space Saving Series) <RXQ-P> 374
2. Dimensions 387
   2.1 Independent Unit 387
   2.2 Combination Unit 390
3. Service Space 394
4. Piping Diagrams 395
5. Wiring Diagrams 399
6. Field Wiring 404
7. Electric Characteristics 407
   7.1 50Hz 407
8. Capacity Tables (Cooling Only) 411
   8.1 Cooling Capacity (RXQ-P) 411
   8.2 Capacity Correction Factor (RXQ-P) 436
9. Operation Limits 443
10. Sound Levels 444
   10.1 50Hz 444
11. Accessories 445
   11.1 Standard Accessories 445
   11.2 Optional Accessories 446
   11.3 Digital Pressure Gauge Kit BHGP26A1(E) 447
   11.4 Central Drain Pan Kit KWC26C160, 280, 450 449

1. Specifications

1.1 Cooling Only 50Hz-Normal Series (Space Saving Series) <RXQ-P>

Model Name			RXQ5PY1	RXQ8PY1
★1 Cooling Capacity (19.5°CWB)		kcal / h	12,100	19,400
		Btu / h	48,100	76,800
		kW	14.1	22.5
★2 Cooling Capacity (19.0°CWB)		kW	14.0	22.4
Casing Color			Ivory White (5Y7.5/1)	Ivory White (5Y7.5/1)
Dimensions: (H×W×D)		mm	1680×635×765	1680×930×765
Heat Exchanger			Cross Fin Coil	Cross Fin Coil
Comp.	Type		Hermetically Sealed Scroll Type	Hermetically Sealed Scroll Type
	Piston Displacement	m³/h	13.72	13.72
	Number of Revolutions	r.p.m	6300	7980
	Motor Output×Number of Units	kW	2.8×1	3.8×1
	Starting Method		Soft Start	Soft Start
Fan	Type		Propeller Fan	Propeller Fan
	Motor Output	kW	0.35×1	0.75×1
	Air Flow Rate	m³/min	95	180
	Drive		Direct Drive	Direct Drive
Connecting Pipes	Liquid Pipe	mm	ϕ9.5 (Brazing Connection)	ϕ9.5 (Brazing Connection)
	Gas Pipe	mm	ϕ15.9 (Brazing Connection)	ϕ19.1 (Brazing Connection)
Product Mass (Machine weight)		kg	160	205
Safety Devices			High Pressure Switch, Fan Driver Overload Protector, Over Current Relay, Inverter Overload Protector	High Pressure Switch, Fan Driver Overload Protector, Over Current Relay, Inverter Overload Protector
Capacity Control		%	28~100	20~100
Refrigerant	Refrigerant Name		R-410A	R-410A
	Charge	kg	6.2	7.7
	Control		Electronic Expansion Valve	Electronic Expansion Valve
Refrigerator Oil			Refer to the nameplate of compressor	Refer to the nameplate of compressor
Standard Accessories			Installation Manual, Operation Manual, Clamps	Installation Manual, Operation Manual, Connection Pipes, Clamps
Drawing No.			C: 4D056532	C: 4D056533

Notes:

★1 Indoor temp. : 27°CDB, 19.5°CWB / outdoor temp. : 35°CDB / Equivalent piping length : 7.5m, level difference : 0m.
★2 Indoor temp. : 27°CDB, 19.0°CWB / outdoor temp. : 35°CDB / Equivalent piping length : 7.5m, level difference : 0m.
3 The power input (PI) (Comp. + Outdoor Fan Motor) : Refer to P.411~435.

Conversion Formulae
kcal/h=kW×860 Btu/h=kW×3412 cfm=m³/min×35.3

The Reference Number
C~: Partly corrected drawings.
J~: Original drawing is Japanese
V~: Printing Convenience

Model Name			RXQ10PY1	RXQ12PY1
★1 Cooling Capacity (19.5°CWB)		kcal / h	24,300	29,000
		Btu / h	96,200	115,000
		kW	28.2	33.7
★2 Cooling Capacity (19.0°CWB)		kW	28.0	33.5
Casing Color			Ivory White (5Y7.5/1)	Ivory White (5Y7.5/1)
Dimensions: (H×W×D)		mm	1680×930×765	1680×1240×765
Heat Exchanger			Cross Fin Coil	Cross Fin Coil
Comp.	Type		Hermetically Sealed Scroll Type	Hermetically Sealed Scroll Type
	Piston Displacement	m³/h	13.72+10.53	13.72+10.53
	Number of Revolutions	r.p.m	6300, 2900	6300, 2900
	Motor Output×Number of Units	kW	(1.2+4.5)×1	(2.5+4.5)×1
	Starting Method		Soft Start	Soft Start
Fan	Type		Propeller Fan	Propeller Fan
	Motor Output	kW	0.75×1	0.35×2
	Air Flow Rate	m³/min	185	233
	Drive		Direct Drive	Direct Drive
Connecting Pipes	Liquid Pipe	mm	ϕ9.5 (Brazing Connection)	ϕ12.7 (Brazing Connection)
	Gas Pipe	mm	ϕ22.2 (Brazing Connection)	ϕ28.6 (Brazing Connection)
Product Mass (Machine Weight)		kg	249	285
Safety Devices			High Pressure Switch, Fan Driver Overload Protector, Over Current Relay, Inverter Overload Protector	High Pressure Switch, Fan Driver Overload Protector, Over Current Relay, Inverter Overload Protector
Capacity Control		%	14~100	14~100
Refrigerant	Refrigerant Name		R-410A	R-410A
	Charge	kg	8.4	10.0
	Control		Electronic Expansion Valve	Electronic Expansion Valve
Refrigerator Oil			Refer to the nameplate of compressor	Refer to the nameplate of compressor
Standard Accessories			Installation Manual, Operation Manual, Connection Pipes, Clamps	Installation Manual, Operation Manual, Connection Pipes, Clamps
Drawing No.			C: 4D056534	C: 4D056535

Notes:

★1 Indoor temp. : 27°CDB, 19.5°CWB / outdoor temp. : 35°CDB / Equivalent piping length : 7.5m, level difference : 0m.
★2 Indoor temp. : 27°CDB, 19.0°CWB / outdoor temp. : 35°CDB / Equivalent piping length : 7.5m, level difference : 0m.
3 The power input (PI) (Comp. + Outdoor Fan Motor) : Refer to P.411~435.

Conversion Formulae
kcal/h=kW×860 Btu/h=kW×3412 cfm=m³/min×35.3

13

Model Name			RXQ14PY1	RXQ16PY1
★1 Cooling Capacity (19.5°CWB)		kcal / h	34,600	39,000
		Btu / h	137,000	155,000
		kW	40.2	45.3
★2 Cooling Capacity (19.0°CWB)		kW	40.0	45.0
Casing Color			Ivory White (5Y7.5/1)	Ivory White (5Y7.5/1)
Dimensions: (H×W×D)		mm	1680×1240×765	1680×1240×765
Heat Exchanger			Cross Fin Coil	Cross Fin Coil
Comp.	Type		Hermetically Sealed Scroll Type	Hermetically Sealed Scroll Type
	Piston Displacement	m^3/h	13.72+10.53+10.53	13.72+10.53+10.53
	Number of Revolutions	r.p.m	6300, 2900×2	6300, 2900×2
	Motor Output×Number of Units	kW	(0.3+4.5+4.5)×1	(1.4+4.5+4.5)×1
	Starting Method		Soft Start	Soft Start
Fan	Type		Propeller Fan	Propeller Fan
	Motor Output	kW	0.35×2	0.35×2
	Air Flow Rate	m^3/min	233	233
	Drive		Direct Drive	Direct Drive
Connecting Pipes	Liquid Pipe	mm	ϕ12.7 (Brazing Connection)	ϕ12.7 (Brazing Connection)
	Gas Pipe	mm	ϕ28.6 (Brazing Connection)	ϕ28.6 (Brazing Connection)
Product Mass (Machine Weight)		kg	329	329
Safety Devices			High Pressure Switch, Fan Driver Overload Protector, Over Current Relay, Inverter Overload Protector	High Pressure Switch, Fan Driver Overload Protector, Over Current Relay, Inverter Overload Protector
Capacity Control		%	10~100	10~100
Refrigerant	Refrigerant Name		R-410A	R-410A
	Charge	kg	12.3	12.5
	Control		Electronic Expansion Valve	Electronic Expansion Valve
Refrigerator Oil			Refer to the nameplate of compressor	Refer to the nameplate of compressor
Standard Accessories			Installation Manual, Operation Manual, Connection Pipes, Clamps	Installation Manual, Operation Manual, Connection Pipes, Clamps
Drawing No.			C: 4D056536	C: 4D056537

Notes:

★1 Indoor temp. : 27°CDB, 19.5°CWB / outdoor temp. : 35°CDB / Equivalent piping length : 7.5m, level difference : 0m.
★2 Indoor temp. : 27°CDB, 19.0°CWB / outdoor temp. : 35°CDB / Equivalent piping length : 7.5m, level difference : 0m.
3 The power input (PI) (Comp. + Outdoor Fan Motor) : Refer to P.411~435.

Conversion Formulae
kcal/h=kW×860 Btu/h=kW×3412 cfm=m^3/min×35.3

Model Name (Combination Unit)			RXQ18PY1	RXQ20PY1
Model Name (Independent Unit)			—	RXQ8PY1+RXQ12PY1
★1 Cooling Capacity (19.5°CWB)		kcal / h	42,400	48,300
		Btu / h	168,000	192,000
		kW	49.3	56.2
★2 Cooling Capacity (19.0°CWB)		kW	49.0	55.9
Casing Color			Ivory White (5Y7.5/1)	Ivory White (5Y7.5/1)
Dimensions: (H×W×D)		mm	1680×1240×765	(1680×930×765)+(1680×1240×765)
Heat Exchanger			Cross Fin Coil	Cross Fin Coil
Comp.	Type		Hermetically Sealed Scroll Type	Hermetically Sealed Scroll Type
	Piston Displacement	m^3/h	13.72+10.53+10.53	(13.72)+(13.72+10.53)
	Number of Revolutions	r.p.m	7980, 2900, 2900	(7980), (6300, 2900)
	Motor Output×Number of Units	kW	(3.0+4.5+4.5)×1	(3.8×1)+(2.5+4.5)×1
	Starting Method		Soft Start	Soft Start
Fan	Type		Propeller Fan	Propeller Fan
	Motor Output	kW	0.75×2	(0.75×1)+(0.35×2)
	Air Flow Rate	m^3/min	239	180+233
	Drive		Direct Drive	Direct Drive
Connecting Pipes	Liquid Pipe	mm	ϕ15.9 (Brazing Connection)	ϕ15.9 (Brazing Connection)
	Gas Pipe	mm	ϕ28.6 (Brazing Connection)	ϕ28.6 (Brazing Connection)
Product Mass (Machine Weight)		kg	341	205+285
Safety Devices			High Pressure Switch, Fan Driver Overload Protector, Over Current Relay, Inverter Overload Protector	High Pressure Switch, Fan Driver Overload Protector, Over Current Relay, Inverter Overload Protector
Capacity Control		%	9~100	8~100
Refrigerant	Refrigerant Name		R-410A	R-410A
	Charge	kg	12.7	7.7+12.3
	Control		Electronic Expansion Valve	Electronic Expansion Valve
Refrigerator Oil			Refer to the nameplate of compressor	Refer to the nameplate of compressor
Standard Accessories			Installation Manual, Operation Manual, Connection Pipes, Clamps	Installation Manual, Operation Manual, Connection Pipes, Clamps
Drawing No.			C: 4D056538	

Notes:

★1 Indoor temp. : 27°CDB, 19.5°CWB / outdoor temp. : 35°CDB / Equivalent piping length : 7.5m, level difference : 0m.
★2 Indoor temp. : 27°CDB, 19.0°CWB / outdoor temp. : 35°CDB / Equivalent piping length : 7.5m, level difference : 0m.
3 The power input (PI) (Comp. + Outdoor Fan Motor) : Refer to P.411~435.

Conversion Formulae
kcal/h=kW×860 Btu/h=kW×3412 cfm=m^3/min×35.3

13

Model Name (Combination Unit)			RXQ22PY1	RXQ24PY1
Model Name (Independent Unit)			**RXQ10PY1+RXQ12PY1**	**RXQ8PY1+RXQ16PY1**
★1 Cooling Capacity (19.5°CWB)		kcal / h	53,200	58,300
		Btu / h	211,000	231,000
		kW	61.9	67.8
★2 Cooling Capacity (19.0°CWB)		kW	61.5	67.4
Casing Color			Ivory White (5Y7.5/1)	Ivory White (5Y7.5/1)
Dimensions: (H×W×D)		mm	(1680×930×765)+(1680×1240×765)	(1680×930×765)+(1680×1240×765)
Heat Exchanger			Cross Fin Coil	Cross Fin Coil
Comp.	Type		Hermetically Sealed Scroll Type	Hermetically Sealed Scroll Type
	Piston Displacement	m^3/h	(13.72+10.53)+(13.72+10.53)	(13.72)+(13.72+10.53+10.53)
	Number of Revolutions	r.p.m	(6,300, 2,900)+(6,300+2,900)	(7980)+(6480, 2900, 2900)
	Motor Output×Number of Units	kW	(1.24+4.5)×1+(2.5+4.5)×1	(3.8×1)+(1.4+4.5+4.5)×1
	Starting Method		Soft Start	Soft Start
Fan	Type		Propeller Fan	Propeller Fan
	Motor Output	kW	(0.75×1)+(0.35×2)	(0.75×1)+(0.35×2)
	Air Flow Rate	m^3/min	185+233	180+233
	Drive		Direct Drive	Direct Drive
Connecting Pipes	Liquid Pipe	mm	ϕ15.9 (Brazing Connection)	ϕ15.9 (Brazing Connection)
	Gas Pipe	mm	ϕ28.6 (Brazing Connection)	ϕ34.9 (Brazing Connection)
Product Mass (Machine Weight)		kg	249+285	205+329
Safety Devices			High Pressure Switch, Fan Driver Overload Protector, Over Current Relay, Inverter Overload Protector	High Pressure Switch, Fan Driver Overload Protector, Over Current Relay, Inverter Overload Protector
Capacity Control		%	7~100	6~100
Refrigerant	Refrigerant Name		R-410A	R-410A
	Charge	kg	8.4+10.0	7.7+12.5
	Control		Electronic Expansion Valve	Electronic Expansion Valve
Refrigerator Oil			Refer to the nameplate of compressor	Refer to the nameplate of compressor
Standard Accessories			Installation Manual, Operation Manual, Connection Pipes, Clamps	Installation Manual, Operation Manual, Connection Pipes, Clamps
Drawing No.				

Notes:

★1 Indoor temp. : 27°CDB, 19.5°CWB / outdoor temp. : 35°CDB / Equivalent piping length : 7.5m, level difference : 0m.
★2 Indoor temp. : 27°CDB, 19.0°CWB / outdoor temp. : 35°CDB / Equivalent piping length : 7.5m, level difference : 0m.
3 The power input (PI) (Comp. + Outdoor Fan Motor) : Refer to P.411~435.

Conversion Formulae
kcal/h=kW×860 Btu/h=kW×3412 cfm=m^3/min×35.3

Model Name (Combination Unit)			RXQ26PY1	RXQ28PY1
Model Name (Independent Unit)			RXQ8PY1+RXQ18PY1	RXQ10PY1+RXQ18PY1
★1 Cooling Capacity (19.5°CWB)		kcal / h	61,700	66,700
		Btu / h	250,000	264,000
		kW	71.8	77.5
★2 Cooling Capacity (19.0°CWB)		kW	71.4	77.0
Casing Color			Ivory White (5Y7.5/1)	Ivory White (5Y7.5/1)
Dimensions: (H×W×D)		mm	(1680×930×765)+(1680×1240×765)	(1680×930×765)+(1680×1240×765)
Heat Exchanger			Cross Fin Coil	Cross Fin Coil
Comp.	Type		Hermetically Sealed Scroll Type	Hermetically Sealed Scroll Type
	Piston Displacement	m³/h	(13.72)+(13.72+10.53+10.53)	(13.72+10.53)+(13.72+10.53+10.53)
	Number of Revolutions	r.p.m	(7980)+(7980, 2900, 2900)	(6300, 2900)+(7980, 2900, 2900)
	Motor Output×Number of Units	kW	(3.8×1)+(3.0+4.5+4.5)×1	(1.2+4.5)×1+(3.0+4.5+4.5)×1
	Starting Method		Soft Start	Soft Start
Fan	Type		Propeller Fan	Propeller Fan
	Motor Output	kW	(0.75×1)+(0.75×2)	(0.75×1)+(0.75×2)
	Air Flow Rate	m³/min	180+239	185+239
	Drive		Direct Drive	Direct Drive
Connecting Pipes	Liquid Pipe	mm	ϕ19.1 (Brazing Connection)	ϕ19.1 (Brazing Connection)
	Gas Pipe	mm	ϕ34.9 (Brazing Connection)	ϕ34.9 (Brazing Connection)
Product Mass (Machine Weight)		kg	205+341	249+341
Safety Devices			High Pressure Switch, Fan Driver Overload Protector, Over Current Relay, Inverter Overload Protector	High Pressure Switch, Fan Driver Overload Protector, Over Current Relay, Inverter Overload Protector
Capacity Control		%	6~100	5~100
Refrigerant	Refrigerant Name		R-410A	R-410A
	Charge	kg	7.7+12.7	8.4+12.7
	Control		Electronic Expansion Valve	Electronic Expansion Valve
Refrigerator Oil			Refer to the nameplate of compressor	Refer to the nameplate of compressor
Standard Accessories			Installation Manual, Operation Manual, Connection Pipes, Clamps	Installation Manual, Operation Manual, Connection Pipes, Clamps
Drawing No.				

Notes:

★1 Indoor temp. : 27°CDB, 19.5°CWB / outdoor temp. : 35°CDB / Equivalent piping length : 7.5m, level difference : 0m.
★2 Indoor temp. : 27°CDB, 19.0°CWB / outdoor temp. : 35°CDB / Equivalent piping length : 7.5m, level difference : 0m.
3 The power input (PI) (Comp. + Outdoor Fan Motor) : Refer to P.411~435.

Conversion Formulae
kcal/h=kW×860 Btu/h=kW×3412 cfm=m³/min×35.3

13

Model Name (Combination Unit)			RXQ30PY1	RXQ32PY1
Model Name (Independent Unit)			RXQ12PY1+RXQ18PY1	RXQ16PY1+RXQ16PY1
★1 Cooling Capacity (19.5°CWB)		kcal / h	71,400	77,800
		Btu / h	283,000	309,000
		kW	83.0	90.5
★2 Cooling Capacity (19.0°CWB)		kW	82.5	90.0
Casing Color			Ivory White (5Y7.5/1)	Ivory White (5Y7.5/1)
Dimensions: (H×W×D)		mm	(1680×1240×765)+(1680×1240×765)	(1680×1240×765)+(1680×1240×765)
Heat Exchanger			Cross Fin Coil	Cross Fin Coil
Comp.	Type		Hermetically Sealed Scroll Type	Hermetically Sealed Scroll Type
	Piston Displacement	m^3/h	(13.72+10.53)+(13.72+10.53+10.53)	(13.72+10.53+10.53)+(13.72+10.53+10.53)
	Number of Revolutions	r.p.m	(6300, 2900)+(7980, 2900, 2900)	(6480, 2900×2)+(6480, 2900, 2900)
	Motor Output×Number of Units	kW	(2.5+4.5)×1+(3.0+4.5+4.5)×1	(1.4+4.5+4.5)×1+(1.4+4.5+4.5)×1
	Starting Method		Soft Start	Soft Start
Fan	Type		Propeller Fan	Propeller Fan
	Motor Output	kW	(0.35×2)+(0.75×2)	(0.35×2)+(0.35×2)
	Air Flow Rate	m^3/min	233+239	233+233
	Drive		Direct Drive	Direct Drive
Connecting Pipes	Liquid Pipe	mm	ϕ19.1 (Brazing Connection)	ϕ19.1 (Brazing Connection)
	Gas Pipe	mm	ϕ34.9 (Brazing Connection)	ϕ34.9 (Brazing Connection)
Product Mass (Machine Weight)		kg	285+341	329+329
Safety Devices			High Pressure Switch, Fan Driver Overload Protector, Over Current Relay, Inverter Overload Protector	High Pressure Switch, Fan Driver Overload Protector, Over Current Relay, Inverter Overload Protector
Capacity Control		%	5~100	5~100
Refrigerant	Refrigerant Name		R-410A	R-410A
	Charge	kg	10.0+12.7	12.5+12.5
	Control		Electronic Expansion Valve	Electronic Expansion Valve
Refrigerator Oil			Refer to the nameplate of compressor	Refer to the nameplate of compressor
Standard Accessories			Installation Manual, Operation Manual, Connection Pipes, Clamps	Installation Manual, Operation Manual, Connection Pipes, Clamps
Drawing No.				

Notes:

★1 Indoor temp. : 27°CDB, 19.5°CWB / outdoor temp. : 35°CDB / Equivalent piping length : 7.5m, level difference : 0m.
★2 Indoor temp. : 27°CDB, 19.0°CWB / outdoor temp. : 35°CDB / Equivalent piping length : 7.5m, level difference : 0m.
3 The power input (PI) (Comp. + Outdoor Fan Motor) : Refer to P.411~435.

Conversion Formulae
kcal/h=kW×860 Btu/h=kW×3412 cfm=m^3/min×35.3

Model Name (Combination Unit)			RXQ34PY1	RXQ36PY1
Model Name (Independent Unit)			RXQ16PY1+RXQ18PY1	RXQ18PY1+RXQ18PY1
★1 Cooling Capacity (19.5°CWB)		kcal / h	81,400	85,100
		Btu / h	323,000	338,000
		kW	94.6	99.0
★2 Cooling Capacity (19.0°CWB)		kW	94.0	98.0
Casing Color			Ivory White (5Y7.5/1)	Ivory White (5Y7.5/1)
Dimensions: (H×W×D)		mm	(1680×1240×765)+(1680×1240×765)	(1680×1240×765)+(1680×1240×765)
Heat Exchanger			Cross Fin Coil	Cross Fin Coil
Comp.	Type		Hermetically Sealed Scroll Type	Hermetically Sealed Scroll Type
	Piston Displacement	m³/h	(13.72+10.53+10.53)+(13.72+10.53+10.53)	(13.72+10.53+10.53)+(13.72+10.53+10.53)
	Number of Revolutions	r.p.m	(6300, 2900, 2900)+(7980, 2900, 2900)	(7980, 2900, 2900)+(7980, 2900, 2900)
	Motor Output×Number of Units	kW	(1.4+4.5+4.5)×1+(3.0+4.5+4.5)×1	(3.0+4.5+4.5)×1+(3.0+4.5+4.5)×1
	Starting Method		Soft Start	Soft Start
Fan	Type		Propeller Fan	Propeller Fan
	Motor Output	kW	(0.35×2)+(0.75×2)	(0.75×2)+(0.75×2)
	Air Flow Rate	m³/min	233+239	239+239
	Drive		Direct Drive	Direct Drive
Connecting Pipes	Liquid Pipe	mm	ϕ19.1 (Brazing Connection)	ϕ19.1 (Brazing Connection)
	Gas Pipe	mm	ϕ34.9 (Brazing Connection)	ϕ41.3 (Brazing Connection)
Product Mass (Machine Weight)		kg	329+341	341+341
Safety Devices			High Pressure Switch, Fan Driver Overload Protector, Over Current Relay, Inverter Overload Protector	High Pressure Switch, Fan Driver Overload Protector, Over Current Relay, Inverter Overload Protector
Capacity Control		%	5~100	4~100
Refrigerant	Refrigerant Name		R-410A	R-410A
	Charge	kg	12.5+12.7	12.7+12.7
	Control		Electronic Expansion Valve	Electronic Expansion Valve
Refrigerator Oil			Refer to the nameplate of compressor	Refer to the nameplate of compressor
Standard Accessories			Installation Manual, Operation Manual, Connection Pipes, Clamps	Installation Manual, Operation Manual, Connection Pipes, Clamps
Drawing No.				

Notes:

★1 Indoor temp. : 27°CDB, 19.5°CWB / outdoor temp. : 35°CDB / Equivalent piping length : 7.5m, level difference : 0m.
★2 Indoor temp. : 27°CDB, 19.0°CWB / outdoor temp. : 35°CDB / Equivalent piping length : 7.5m, level difference : 0m.
3 The power input (PI) (Comp. + Outdoor Fan Motor) : Refer to P.411~435.

Conversion Formulae
kcal/h=kW×860 Btu/h=kW×3412 cfm=m³/min×35.3

13

Model Name (Combination Unit)			RXQ38PY1	RXQ40PY1
Model Name (Independent Unit)			**RXQ8PY1+RXQ12PY1+RXQ18PY1**	**RXQ8PY1+RXQ16PY1+RXQ16PY1**
★1 Cooling Capacity (19.5°CWB)		kcal / h	91,200	97,200
		Btu / h	362,000	386,000
		kW	106	113
★2 Cooling Capacity (19.0°CWB)		kW	105	112
Casing Color			Ivory White (5Y7.5/1)	Ivory White (5Y7.5/1)
Dimensions: (H×W×D)		mm	(1680×930×765)+(1680×1240×765)+(1680×1240×765)	(1680×930×765)+(1680×1240×765)+(1680×1240×765)
Heat Exchanger			Cross Fin Coil	Cross Fin Coil
Comp.	Type		Hermetically Sealed Scroll Type	Hermetically Sealed Scroll Type
	Piston Displacement	m^3/h	(13.72)+(13.72+10.53)+(13.72+10.53+10.53)	(13.72)+(13.72+10.53+10.53)+(13.72+10.53+10.53)
	Number of Revolutions	r.p.m	(7980)+(6300, 2900)+(7980, 2900, 2900)	(7980)+(6480, 2900, 2900)+(6300, 2900, 2900)
	Motor Output×Number of Units	kW	3.8×1+(2.5+4.5)×1+(3.0+4.5+4.5)×1	3.8×1+(1.4+4.5+4.5)×1+(1.4+4.5+4.5)×1
	Starting Method		Soft Start	Soft Start
Fan	Type		Propeller Fan	Propeller Fan
	Motor Output	kW	(0.75×1)+(0.35×2)+(0.75×2)	(0.75×1)+(0.35×2)+(0.35×2)
	Air Flow Rate	m^3/min	180+233+239	180+233+233
	Drive		Direct Drive	Direct Drive
Connecting Pipes	Liquid Pipe	mm	ϕ19.1 (Brazing Connection)	ϕ19.1 (Brazing Connection)
	Gas Pipe	mm	ϕ41.3 (Brazing Connection)	ϕ41.3 (Brazing Connection)
Product Mass (Machine Weight)		kg	205+285+341	205+329+329
Safety Devices			High Pressure Switch, Fan Driver Overload Protector, Over Current Relay, Inverter Overload Protector	High Pressure Switch, Fan Driver Overload Protector, Over Current Relay, Inverter Overload Protector
Capacity Control		%	4~100	4~100
Refrigerant	Refrigerant Name		R-410A	R-410A
	Charge	kg	7.7+10.0+12.7	7.7+12.5+12.5
	Control		Electronic Expansion Valve	Electronic Expansion Valve
Refrigerator Oil			Refer to the nameplate of compressor	Refer to the nameplate of compressor
Standard Accessories			Installation Manual, Operation Manual, Connection Pipes, Clamps	Installation Manual, Operation Manual, Connection Pipes, Clamps
Drawing No.				

Notes:

★1 Indoor temp. : 27°CDB, 19.5°CWB / outdoor temp. : 35°CDB / Equivalent piping length : 7.5m, level difference : 0m.
★2 Indoor temp. : 27°CDB, 19.0°CWB / outdoor temp. : 35°CDB / Equivalent piping length : 7.5m, level difference : 0m.
3 The power input (PI) (Comp. + Outdoor Fan Motor) : Refer to P.411~435.

Conversion Formulae
kcal/h=kW×860 Btu/h=kW×3412 cfm=m^3/min×35.3

Model Name (Combination Unit)			RXQ42PY1	RXQ44PY1
Model Name (Independent Unit)			RXQ8PY1+RXQ16PY1+RXQ18PY1	RXQ8PY1+RXQ18PY1+RXQ18PY1
★1 Cooling Capacity (19.5°CWB)		kcal / h	101,000	104,000
		Btu / h	399,000	413,000
		kW	117	121
★2 Cooling Capacity (19.0°CWB)		kW	116	120
Casing Color			Ivory White (5Y7.5/1)	Ivory White (5Y7.5/1)
Dimensions: (H×W×D)		mm	(1680×930×765)+(1680×1240×765)+(1680×1240×765)	(1680×930×765)+(1680×1240×765)+(1680×1240×765)
Heat Exchanger			Cross Fin Coil	Cross Fin Coil
Comp.	Type		Hermetically Sealed Scroll Type	Hermetically Sealed Scroll Type
	Piston Displacement	m^3/h	(13.72)+(13.72+10.53+10.53)+(13.72+10.53+10.53)	13.72+(13.72+10.53+10.53)+(13.72+10.53+10.53)
	Number of Revolutions	r.p.m	(7980)+(6480, 2900, 2900)+(7980, 2900, 2900)	(7980), (7980, 2900, 2900)+(7980, 2900, 2900)
	Motor Output×Number of Units	kW	3.8×1+(1.4+4.5+4.5)×1+(3.0+4.5+4.5)×1	3.8×1+(3.0+4.5+4.5)×1+(3.0+4.5+4.5)×1
	Starting Method		Soft Start	Soft Start
Fan	Type		Propeller Fan	Propeller Fan
	Motor Output	kW	(0.75×1)+(0.35×2)+(0.75×2)	(0.75×1)+(0.75×2)+(0.75×2)
	Air Flow Rate	m^3/min	180+233+239	180+239+239
	Drive		Direct Drive	Direct Drive
Connecting Pipes	Liquid Pipe	mm	ϕ19.1 (Brazing Connection)	ϕ19.1 (Brazing Connection)
	Gas Pipe	mm	ϕ41.3 (Brazing Connection)	ϕ41.3 (Brazing Connection)
Product Mass (Machine Weight)		kg	205+329+341	205+341+341
Safety Devices			High Pressure Switch, Fan Driver Overload Protector, Over Current Relay, Inverter Overload Protector	High Pressure Switch, Fan Driver Overload Protector, Over Current Relay, Inverter Overload Protector
Capacity Control		%	4~100	4~100
Refrigerant	Refrigerant Name		R-410A	R-410A
	Charge	kg	7.7+12.5+12.7	7.7+12.7+12.7
	Control		Electronic Expansion Valve	Electronic Expansion Valve
Refrigerator Oil			Refer to the nameplate of compressor	Refer to the nameplate of compressor
Standard Accessories			Installation Manual, Operation Manual, Connection Pipes, Clamps	Installation Manual, Operation Manual, Connection Pipes, Clamps
Drawing No.				

Notes:

★1 Indoor temp. : 27°CDB, 19.5°CWB / outdoor temp. : 35°CDB / Equivalent piping length : 7.5m, level difference : 0m.
★2 Indoor temp. : 27°CDB, 19.0°CWB / outdoor temp. : 35°CDB / Equivalent piping length : 7.5m, level difference : 0m.
3 The power input (PI) (Comp. + Outdoor Fan Motor) : Refer to P.411~435.

Conversion Formulae
kcal/h=kW×860 Btu/h=kW×3412 cfm=m^3/min×35.3

13

Model Name (Combination Unit)			RXQ46PY1	RXQ48PY1
Model Name (Independent Unit)			RXQ10PY1+RXQ18PY1+RXQ18PY1	RXQ12PY1+RXQ18PY1+RXQ18PY1
★1 Cooling Capacity (19.5°CWB)		kcal / h	109,000	114,000
		Btu / h	433,000	454,000
		kW	127	133
★2 Cooling Capacity (19.0°CWB)		kW	126	132
Casing Color			Ivory White (5Y7.5/1)	Ivory White (5Y7.5/1)
Dimensions: (H×W×D)		mm	(1680×930×765)+(1680×1240×765)+(1680×1240×765)	(1680×1240×765)+(1680×1240×765)+(1680×1240×765)
Heat Exchanger			Cross Fin Coil	Cross Fin Coil
Comp.	Type		Hermetically Sealed Scroll Type	Hermetically Sealed Scroll Type
	Piston Displacement	m^3/h	(13.7+10.53)+(13.72+10.53+10.53)+(13.72+10.53+10.53)	(13.72+10.53)+(13.72+10.53+10.53)+(13.72+10.53+10.53)
	Number of Revolutions	r.p.m	(6300, 2900)+(7980, 2900, 2900)+(7980, 2900, 2900)	(6300, 2900)+(7980, 2900, 2900)+(7980, 2900, 2900)
	Motor Output×Number of Units	kW	(1.2+4.5)×1+(3.0+4.5+4.5)×1+(3.0+4.5+4.5)×1	(2.5+4.5)×1+(3.0+4.5+4.5)×1+(3.0+4.5+4.5)×1
	Starting Method		Soft Start	Soft Start
Fan	Type		Propeller Fan	Propeller Fan
	Motor Output	kW	(0.75×1)+(0.75×2)+(0.75×2)	(0.35×2)+(0.75×2)+(0.75×2)
	Air Flow Rate	m^3/min	185+239+239	233+239+239
	Drive		Direct Drive	Direct Drive
Connecting Pipes	Liquid Pipe	mm	ϕ19.1 (Brazing Connection)	ϕ19.1 (Brazing Connection)
	Gas Pipe	mm	ϕ41.3 (Brazing Connection)	ϕ41.3 (Brazing Connection)
Product Mass (Machine Weight)		kg	249+341+341	285+341+341
Safety Devices			High Pressure Switch, Fan Driver Overload Protector, Over Current Relay, Inverter Overload Protector	High Pressure Switch, Fan Driver Overload Protector, Over Current Relay, Inverter Overload Protector
Capacity Control		%	3~100	3~100
Refrigerant	Refrigerant Name		R-410A	R-410A
	Charge	kg	8.4+12.7+12.7	10.0+12.7+12.7
	Control		Electronic Expansion Valve	Electronic Expansion Valve
Refrigerator Oil			Refer to the nameplate of compressor	Refer to the nameplate of compressor
Standard Accessories			Installation Manual, Operation Manual, Connection Pipes, Clamps	Installation Manual, Operation Manual, Connection Pipes, Clamps
Drawing No.				

Notes:

★1 Indoor temp. : 27°CDB, 19.5°CWB / outdoor temp. : 35°CDB / Equivalent piping length : 7.5m, level difference : 0m.
★2 Indoor temp. : 27°CDB, 19.0°CWB / outdoor temp. : 35°CDB / Equivalent piping length : 7.5m, level difference : 0m.
3 The power input (PI) (Comp. + Outdoor Fan Motor) : Refer to P.411~435.

Conversion Formulae
kcal/h=kW×860 Btu/h=kW×3412 cfm=m^3/min×35.3

Model Name (Combination Unit)			RXQ50PY1	RXQ52PY1
Model Name (Independent Unit)			RXQ14PY1+RXQ18PY1+RXQ18PY1	RXQ16PY1+RXQ18PY1+RXQ18PY1
★1 Cooling Capacity (19.5°CWB)		kcal / h	120,000	124,000
		Btu / h	474,000	491,000
		kW	139	144
★2 Cooling Capacity (19.0°CWB)		kW	138	143
Casing Color			Ivory White (5Y7.5/1)	Ivory White (5Y7.5/1)
Dimensions: (H×W×D)		mm	(1680×1240×765)+(1680×1240×765)+(1680×1240×765)	(1680×1240×765)+(1680×1240×765)+(1680×1240×765)
Heat Exchanger			Cross Fin Coil	Cross Fin Coil
Comp.	Type		Hermetically Sealed Scroll Type	Hermetically Sealed Scroll Type
	Piston Displacement	m³/h	(13.72+10.53+10.53)+(13.72+10.53+10.53)+(13.72+10.53+10.53)	(13.72+10.53+10.53)+(13.72+10.53+10.53)+(13.72+10.53+10.53)
	Number of Revolutions	r.p.m	(6300, 2900, 2900)+(7980, 2900, 2900)+(7980, 2900, 2900)	(6300, 2900, 2900)+(7980, 2900, 2900)+(7980, 2900, 2900)
	Motor Output×Number of Units	kW	(0.3+4.5+4.5)×1+(3.0+4.5+4.5)×1+(3.0+4.5+4.5)×1	(1.4+4.5+4.5)×1+(3.0+4.5+4.5)×1+(3.0+4.5+4.5)×1
	Starting Method		Soft Start	Soft Start
Fan	Type		Propeller Fan	Propeller Fan
	Motor Output	kW	(0.35×2)+(0.75×2)+(0.75×2)	(0.35×2)+(0.75×2)+(0.75×2)
	Air Flow Rate	m³/min	233+239+239	233+239+239
	Drive		Direct Drive	Direct Drive
Connecting Pipes	Liquid Pipe	mm	ϕ19.1 (Brazing Connection)	ϕ19.1 (Brazing Connection)
	Gas Pipe	mm	ϕ41.3 (Brazing Connection)	ϕ41.3 (Brazing Connection)
Product Mass (Machine Weight)		kg	329+341+341	329+341+341
Safety Devices			High Pressure Switch, Fan Driver Overload Protector, Over Current Relay, Inverter Overload Protector	High Pressure Switch, Fan Driver Overload Protector, Over Current Relay, Inverter Overload Protector
Capacity Control		%	3~100	3~100
Refrigerant	Refrigerant Name		R-410A	R-410A
	Charge	kg	12.3+12.7+12.7	12.5+12.7+12.7
	Control		Electronic Expansion Valve	Electronic Expansion Valve
Refrigerator Oil			Refer to the nameplate of compressor	Refer to the nameplate of compressor
Standard Accessories			Installation Manual, Operation Manual, Connection Pipes, Clamps	Installation Manual, Operation Manual, Connection Pipes, Clamps
Drawing No.				

Notes:

★1 Indoor temp. : 27°CDB, 19.5°CWB / outdoor temp. : 35°CDB / Equivalent piping length : 7.5m, level difference : 0m.
★2 Indoor temp. : 27°CDB, 19.0°CWB / outdoor temp. : 35°CDB / Equivalent piping length : 7.5m, level difference : 0m.
3 The power input (PI) (Comp. + Outdoor Fan Motor) : Refer to P.411~435.

Conversion Formulae
kcal/h=kW×860 Btu/h=kW×3412 cfm=m³/min×35.3

13

Model Name (Combination Unit)			**RXQ54PY1**
Model Name (Independent Unit)			**RXQ18PY1+RXQ18PY1+RXQ18PY1**
★1 Cooling Capacity (19.5°CWB)		kcal / h	127,000
		Btu / h	505,000
		kW	148
★2 Cooling Capacity (19.0°CWB)		kW	147
Casing Color			Ivory White (5Y7.5/1)
Dimensions: (H×W×D)		mm	(1680×1240×765)+(1680×1240×765)+(1680×1240×765)
Heat Exchanger			Cross Fin Coil
Comp.	Type		Hermetically Sealed Scroll Type
	Piston Displacement	m³/h	(13.72+10.53+10.53)+(13.72+10.53+10.53)+(13.72+10.53+10.53)
	Number of Revolutions	r.p.m	(7980, 2900, 2900)+(7980, 2900, 2900)+(7980, 2900, 2900)
	Motor Output×Number of Units	kW	((3.0+4.5+4.5)×1)+((3.0+4.5+4.5)×1)+((3.0+4.5+4.5)×1)
	Starting Method		Soft Start
Fan	Type		Propeller Fan
	Motor Output	kW	(0.75×2)+(0.75×2)+(0.75×2)
	Air Flow Rate	m³/min	239+239+239
	Drive		Direct Drive
Connecting Pipes	Liquid Pipe	mm	ϕ19.1 (Brazing Connection)
	Gas Pipe	mm	ϕ41.3 (Brazing Connection)
Product Mass (Machine Weight)		kg	341+341+341
Safety Devices			High Pressure Switch, Fan Driver Overload Protector, Over Current Relay, Inverter Overload Protector
Capacity Control		%	3~100
Refrigerant	Refrigerant Name		R-410A
	Charge	kg	12.7+12.7+12.7
	Control		Electronic Expansion Valve
Refrigerator Oil			Refer to the nameplate of compressor
Standard Accessories			Installation Manual, Operation Manual, Connection Pipes, Clamps
Drawing No.			

Notes:

★1 Indoor temp. : 27°CDB, 19.5°CWB / outdoor temp. : 35°CDB / Equivalent piping length : 7.5m, level difference : 0m.
★2 Indoor temp. : 27°CDB, 19.0°CWB / outdoor temp. : 35°CDB / Equivalent piping length : 7.5m, level difference : 0m.
3 The power input (PI) (Comp. + Outdoor Fan Motor) : Refer to P.411~435.

Conversion Formulae
kcal/h=kW×860 Btu/h=kW×3412 cfm=m³/min×35.3

2. Dimensions

2.1 Independent Unit

RXQ5P

Unit (mm)

3D051448B

Notes) 1. DETAIL FOR FRONT SIDE AND DETAIL FOR BOTTOM SIDE INDICATE THE DIMENSIONS AFTER FIXING THE ATTACHED PIPING.

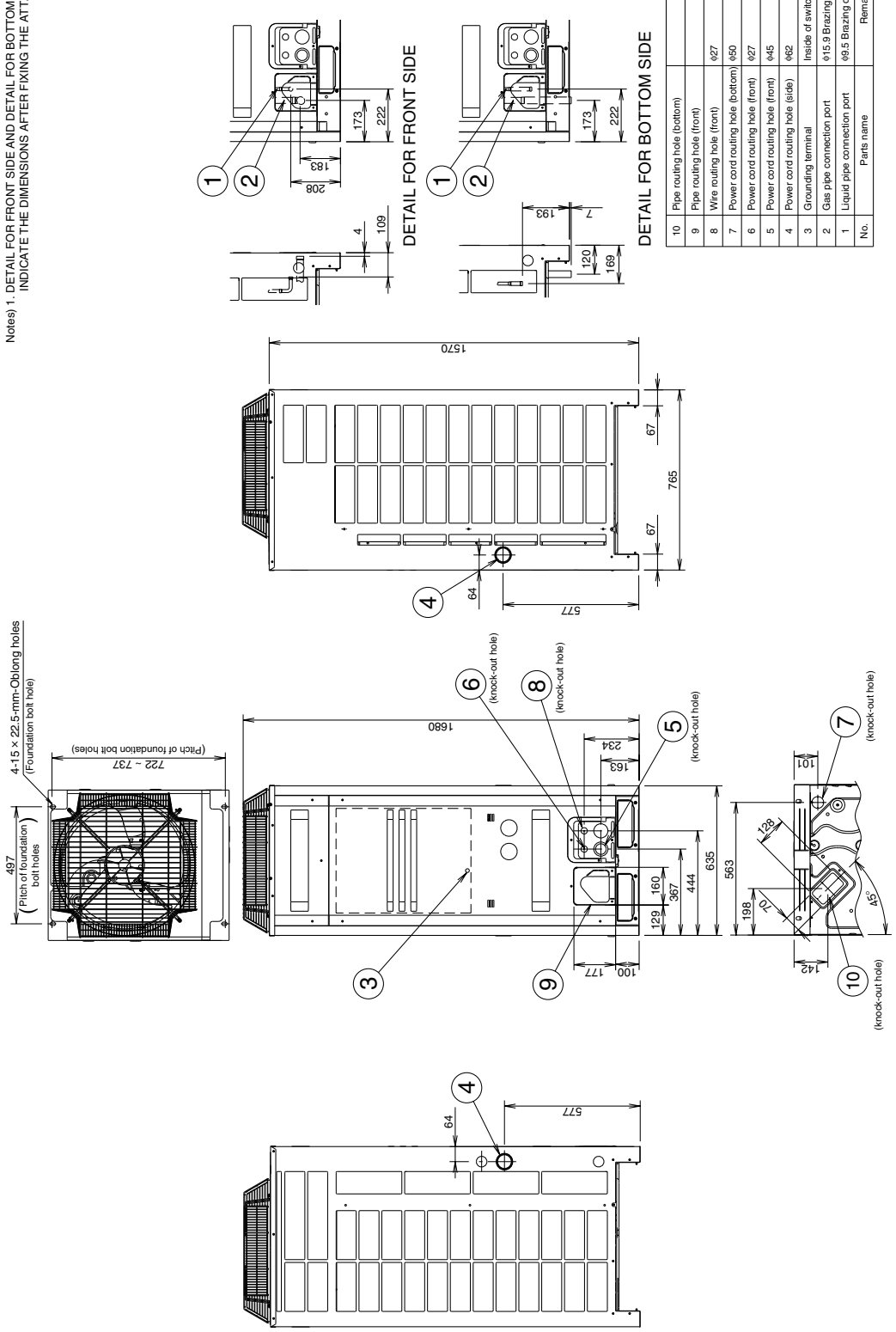

No.	Parts name	Remarks
10	Pipe routing hole (bottom)	
9	Pipe routing hole (front)	
8	Wire routing hole (front)	ø27
7	Power cord routing hole (bottom)	ø50
6	Power cord routing hole (front)	ø27
5	Power cord routing hole (front)	ø45
4	Power cord routing hole (side)	ø62
3	Grounding terminal	Inside of switch box (M8)
2	Gas pipe connection port	ø15.9 Brazing connection
1	Liquid pipe connection port	ø9.5 Brazing connection

13

RXQ8P, RXQ10P

Unit (mm)

3D051449C

Notes) 1. DETAIL FOR FRONT SIDE AND DETAIL FOR BOTTOM SIDE INDICATE THE DIMENSIONS AFTER FIXING THE ATTACHED PIPING.
2. Gas pipe [Heat pump type]
φ19.1 Brazing connection···8PY1, YL, 200KY1 type
φ22.2 Brazing connection···10PY1, YL type
Liquid pipe [Heat pump type]
φ9.5 Brazing connection···8 · 10PY1, YL, 200KY1 type

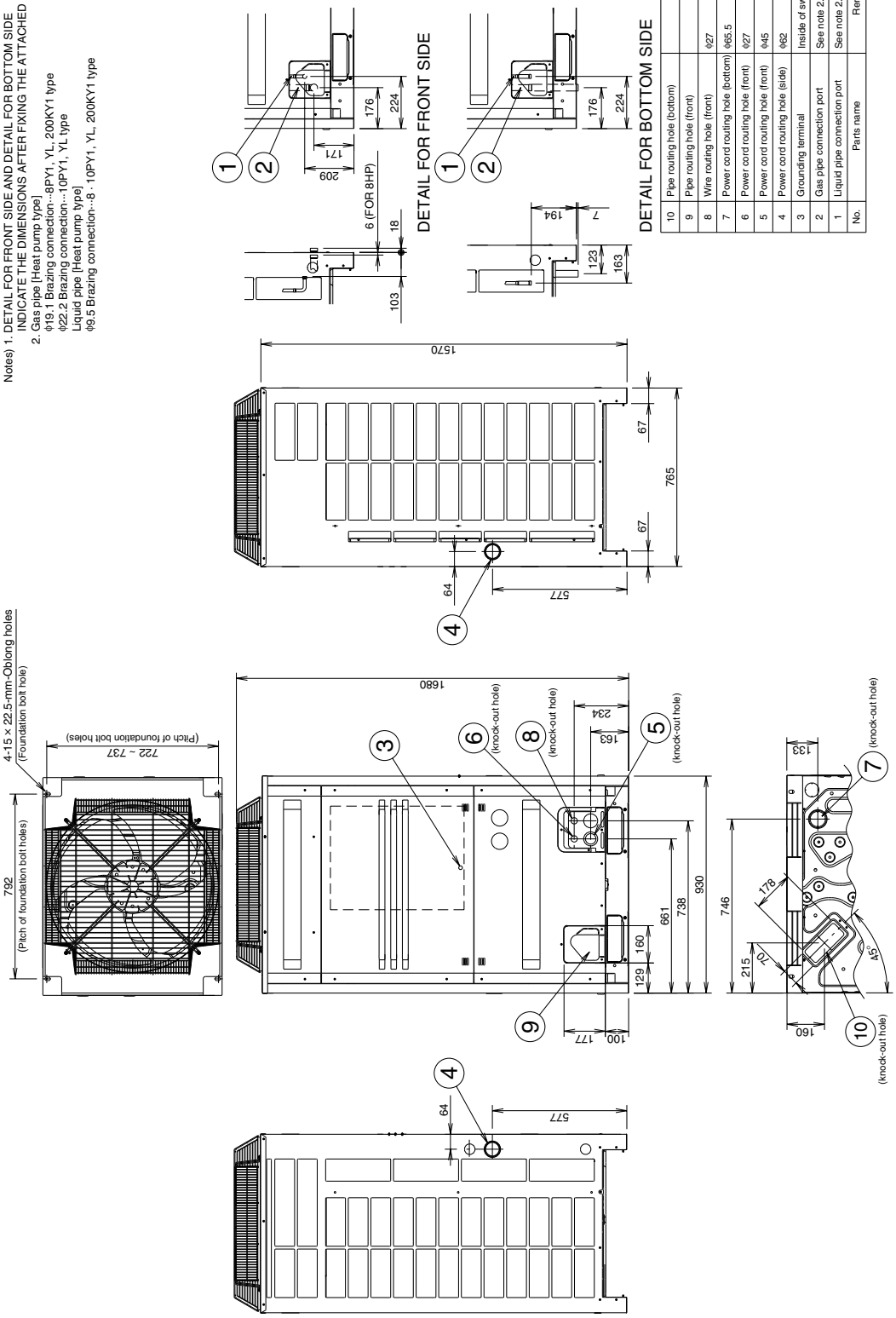

No.	Parts name	Remarks
10	Pipe routing hole (bottom)	
9	Pipe routing hole (front)	
8	Wire routing hole (front)	φ27
7	Power cord routing hole (bottom)	φ55.5
6	Power cord routing hole (front)	φ27
5	Power cord routing hole (front)	φ45
4	Power cord routing hole (side)	φ62
3	Grounding terminal	Inside of switch box (M8)
2	Gas pipe connection port	See note 2.
1	Liquid pipe connection port	See note 2.

RXQ12P, RXQ14P
RXQ16P, Rxq18P

Unit (mm)

3D051450C

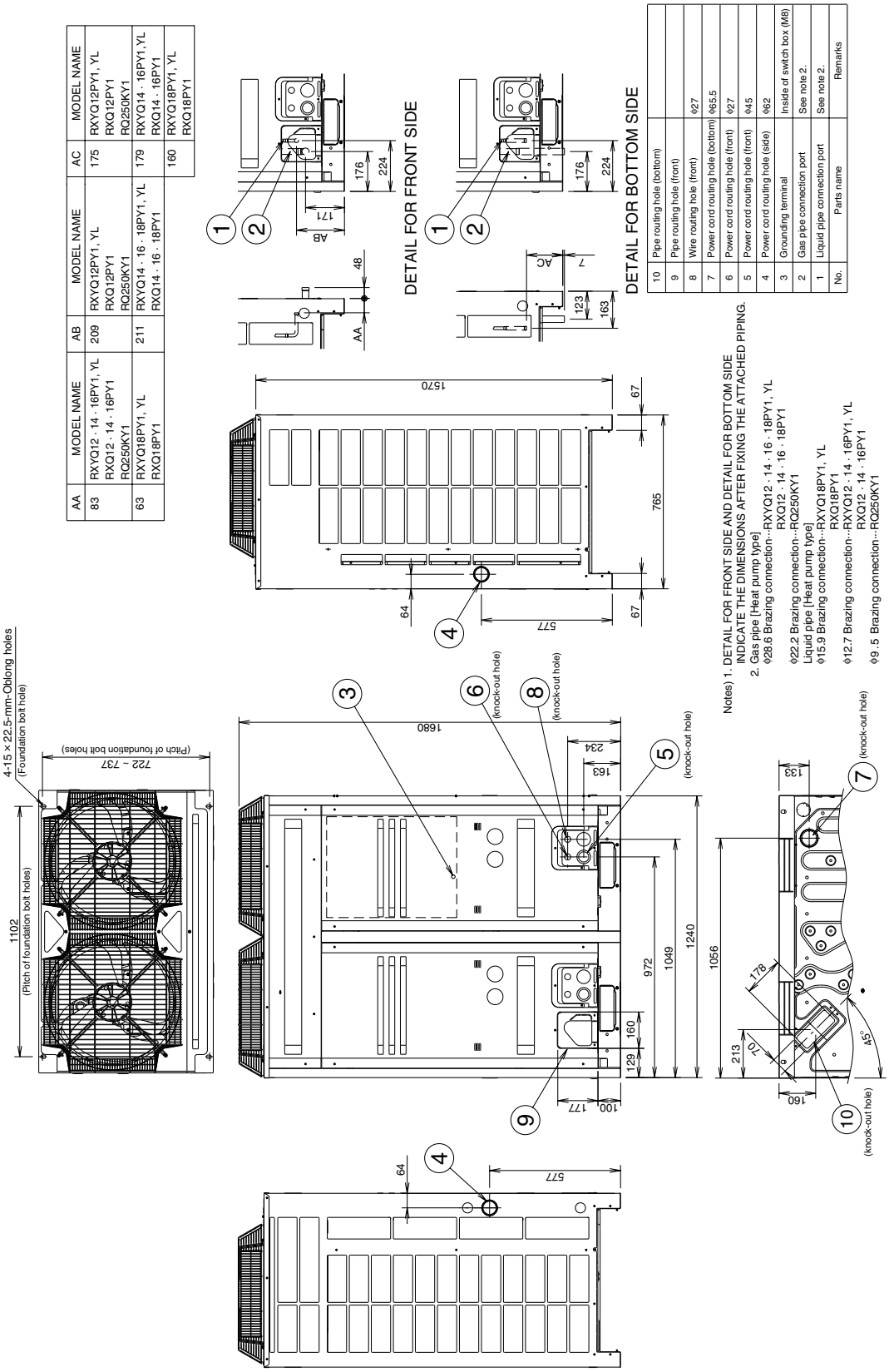

AA	MODEL NAME	AB	MODEL NAME	AC	MODEL NAME
83	RXYQ12 · 14 · 16PY1, YL RXQ12 · 14 · 16PY1 RQ250KY1	209	RXYQ12PY1, YL RXQ12PY1 RQ250KY1	175	RXYQ12PY1, YL RXQ12PY1 RQ250KY1
63	RXYQ18PY1, YL RXQ18PY1	211	RXYQ14 · 16 · 18PY1, YL RXQ14 · 16 · 18PY1	179	RXYQ14 · 16PY1,YL RXQ14 · 16PY1
				160	RXYQ18PY1, YL RXQ18PY1

No.	Parts name	Remarks
10	Pipe routing hole (bottom)	
9	Pipe routing hole (front)	
8	Wire routing hole (front)	φ27
7	Power cord routing hole (bottom)	φ65.5
6	Power cord routing hole (front)	φ27
5	Power cord routing hole (front)	φ45
4	Power cord routing hole (side)	φ62
3	Grounding terminal	Inside of switch box (M8)
2	Gas pipe connection port	See note 2.
1	Liquid pipe connection port	See note 2.

13

2.2 Combination Unit

RXQ20P, RXQ22P, RXQ24P
RXQ26P, RXQ28P

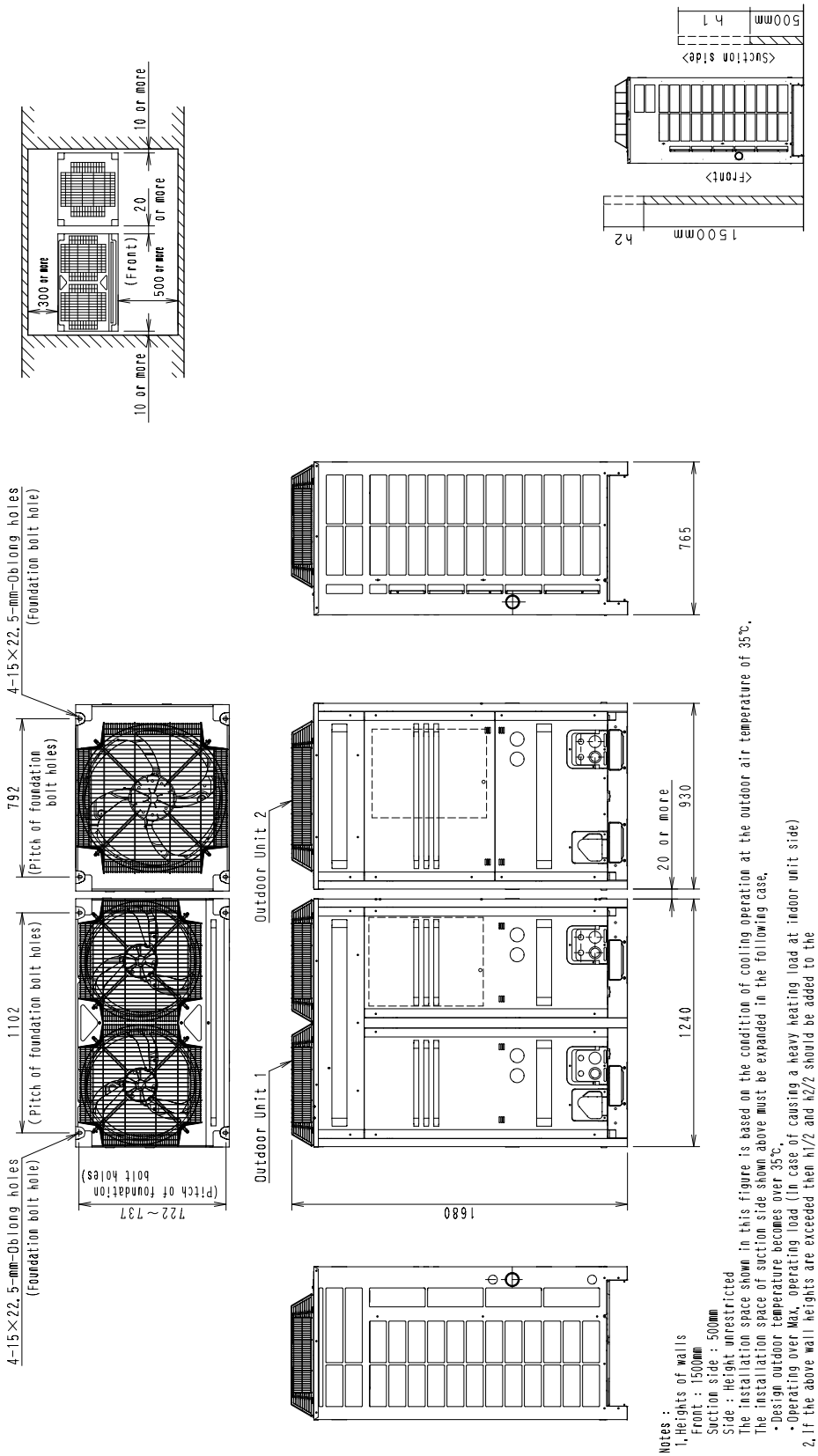

Notes :
1. Heights of walls
   Front : 1500mm
   Suction side : 500mm
   Side : Height unrestricted
   The installation space shown in this figure is based on the condition of cooling operation at the outdoor air temperature of 35℃.
   The installation space of suction side shown above must be expanded in the following case.
   • Design outdoor temperature becomes over 35℃.
   • Operating over Max. operating load (In case of causing a heavy heating load at indoor unit side)
2. If the above wall heights are exceeded then h1/2 and h2/2 should be added to the front and suction side service spaces respectively as shown in the following figure.
3. When installing the units the most appropriate pattern should be selected from those shown above in order to obtain the best fit in the space available always bearing in mind the need to leave enough room for a person to pass between units and wall and for the air to circulate freely. (If more units are to be installed than are catered for in the above patterns your layout should take account of the possibility of short circuits.)
4. The units should be installed to leave sufficient space at the front for the on site refrigerant piping work to be carried out comfortably.

Unit (mm)

Model Name	Outdoor Unit 1	Drawing No.	Outdoor Unit 2	Drawing No.
RXQ20P	RXQ12P	3D051450A	RXQ8P	3D051449A
RXQ22P	RXQ12P	3D051450A	RXQ10P	3D051449A
RXQ24P	RXQ16P	3D051450A	RXQ8P	3D051449A
RXQ26P	RXQ18P	3D051450A	RXQ8P	3D051449A
RXQ28P	RXQ18P	3D051450A	RXQ10P	3D051449A

C : 3D052930A

RXQ30P, RXQ32P, RXQ34P, RXQ36P

Unit (mm)

C : 3D052931A

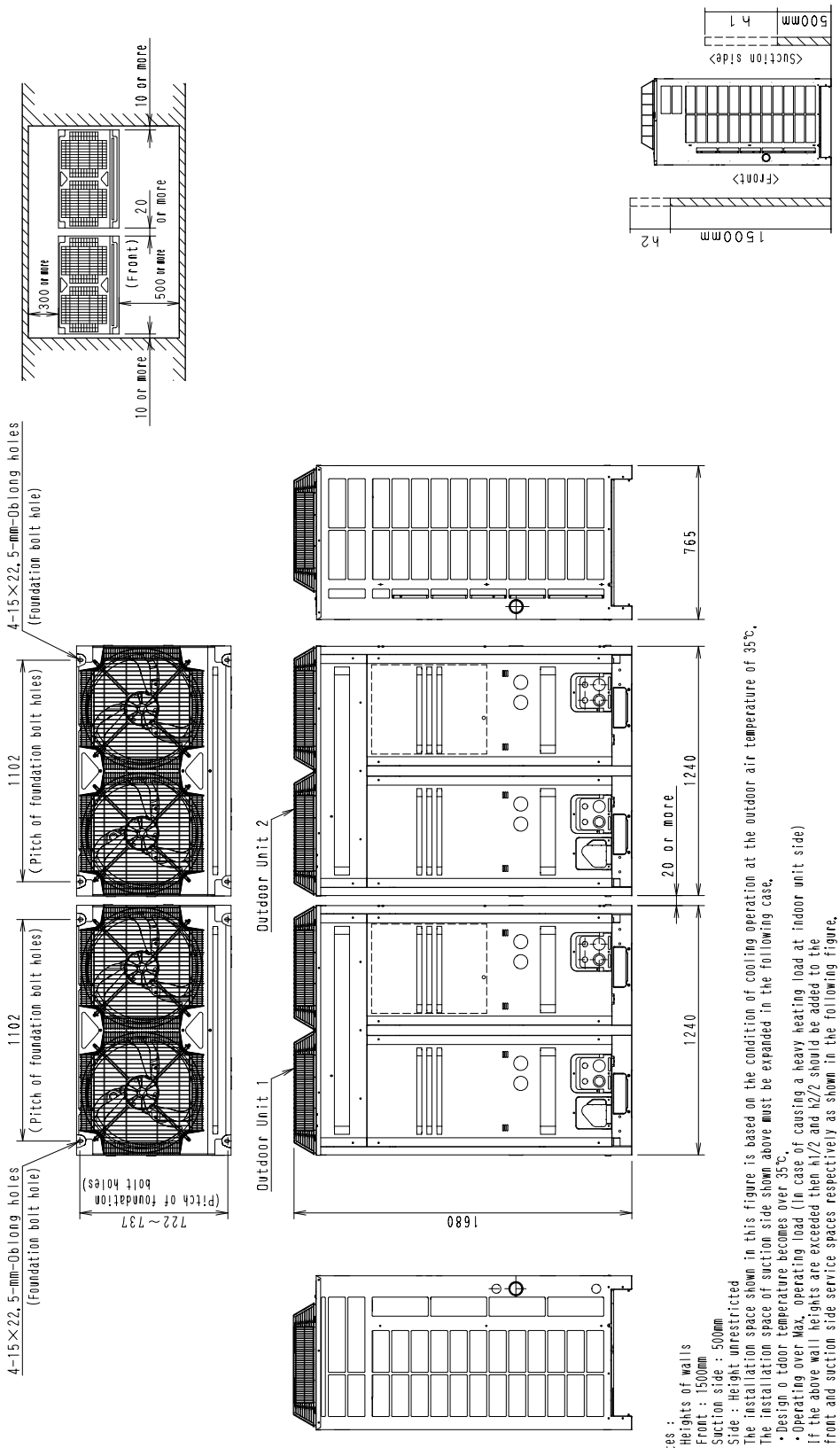

Notes :
1. Heights of walls
   Front : 1500mm
   Suction side : 500mm
   Side : Height unrestricted
   The installation space shown in this figure is based on the condition of cooling operation at the outdoor air temperature of 35℃.
   The installation space of suction side shown above must be expanded in the following case.
   • Design o tdoor temperature becomes over 35℃.
   • Operating over Max. operating load (in case of causing a heavy heating load at indoor unit side)
2. If the above wall heights are exceeded then h1/2 and h2/2 should be added to the front and suction side service spaces respectively as shown in the following figure.
3. When installing the units the most appropriate pattern should be selected from those shown above in order to obtain the best fit in the space available always bearing in mind the need to leave enough room for a parson to pass between units and wall and for the air to circulate freely. (If more units are to be installed than are catered for in the above patterns your layout should take account of the possibility of short circuits.)
4. The units should be installed to leave sufficient space at the front for the on site refrigerant piping work to be carried out comfortably.

Model Name	Outdoor Unit 1	Drawing No.	Outdoor Unit 2	Drawing No.
RXQ30P	RXQ18P	3D051450A	RXQ12P	3D051450A
RXQ32P	RXQ16P	3D051450A	RXQ16P	3D051450A
RXQ34P	RXQ18P	3D051450A	RXQ16P	3D051450A
RXQ36P	RXQ18P	3D051450A	RXQ18P	3D051450A

13

RXQ38P, RXQ40P, RXQ42P, RXQ44P, RXQ46P

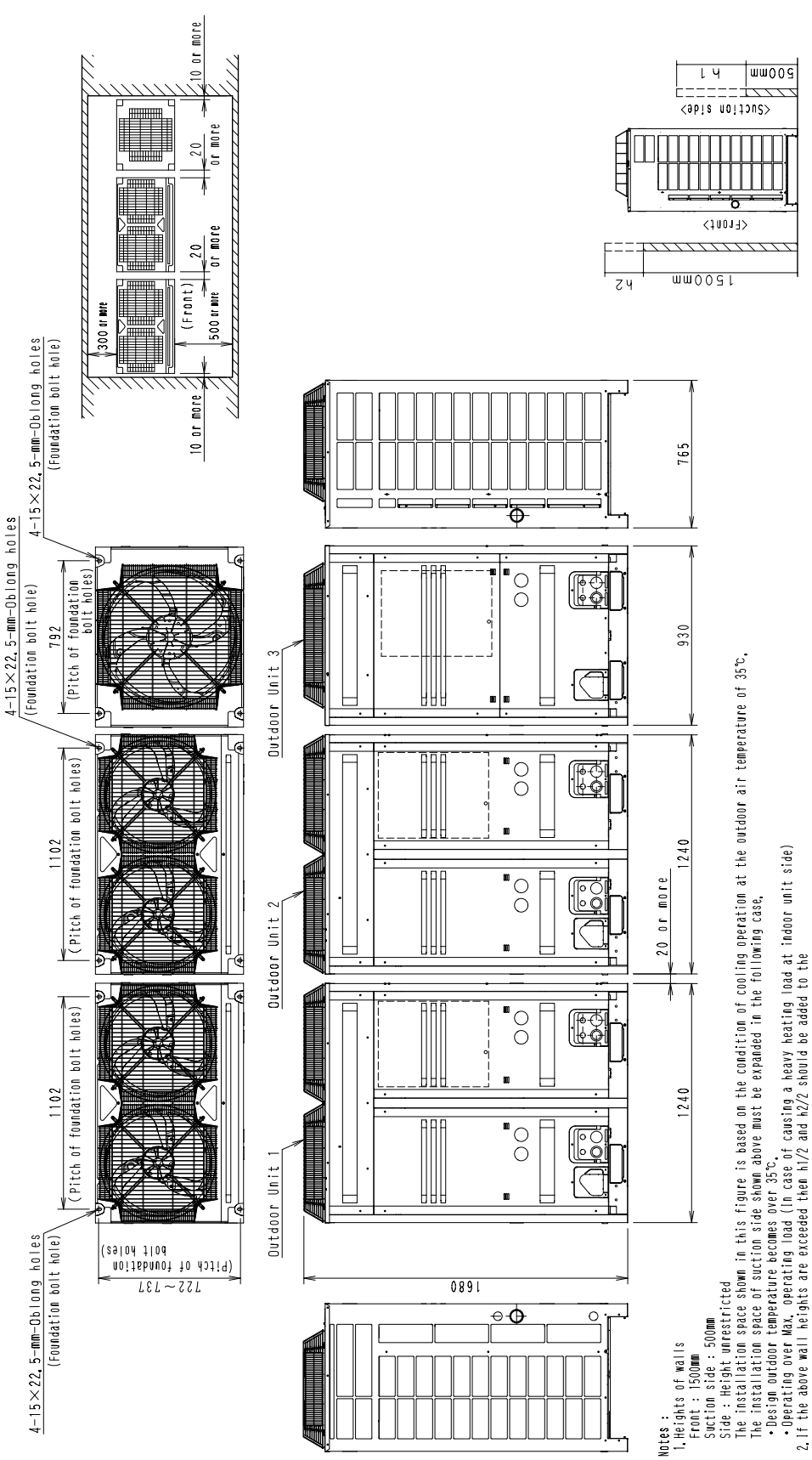

Notes :
1. Heights of walls
   Front : 1500mm
   Suction side : 500mm
   Side : Height unrestricted
   The installation space shown in this figure is based on the condition of cooling operation at the outdoor air temperature of 35℃.
   The installation space of suction side shown above must be expanded in the following case.
   • Design outdoor temperature becomes over 35℃.
   • Operating over Max. operating load (In case of causing a heavy heating load at indoor unit side)
2. If the above wall heights are exceeded then h1/2 and h2/2 should be added to the front and suction side service spaces respectively as shown in the following figure.
3. When installing the units the most appropriate pattern should be selected from those shown above in order to obtain the best fit in the space available always bearing in mind the need to leave enough room for a person to pass between units and wall and for the air to circulate freely. (If more units are to be installed than are catered for in the above patterns your layout should take account of the possibility of short circuits.)
4. The units should be installed to leave sufficient space at the front for the on site refrigerant piping work to be carried out comfortably.

Unit (mm)

C : 3D052932A

Model Name	Outdoor Unit 1	Drawing No.	Outdoor Unit 2	Drawing No.	Outdoor Unit 3	Drawing No.
RXQ38PY1	RXQ18PY1	3D051450A	RXQ12PY1	3D051450A	RXQ8PY1	3F051449A
RXQ40PY1	RXQ16PY1	3D051450A	RXQ16PY1	3D051450A	RXQ8PY1	3F051449A
RXQ42PY1	RXQ18PY1	3D051450A	RXQ16PY1	3D051450A	RXQ8PY1	3F051449A
RXQ44PY1	RXQ18PY1	3D051450A	RXQ18PY1	3D051450A	RXQ8PY1	3F051449A
RXQ46PY1	RXQ18PY1	3D051450A	RXQ18PY1	3D051450A	RXQ10PY1	3F051449A

RXQ48P, RXQ50P, RXQ52P, RXQ54P

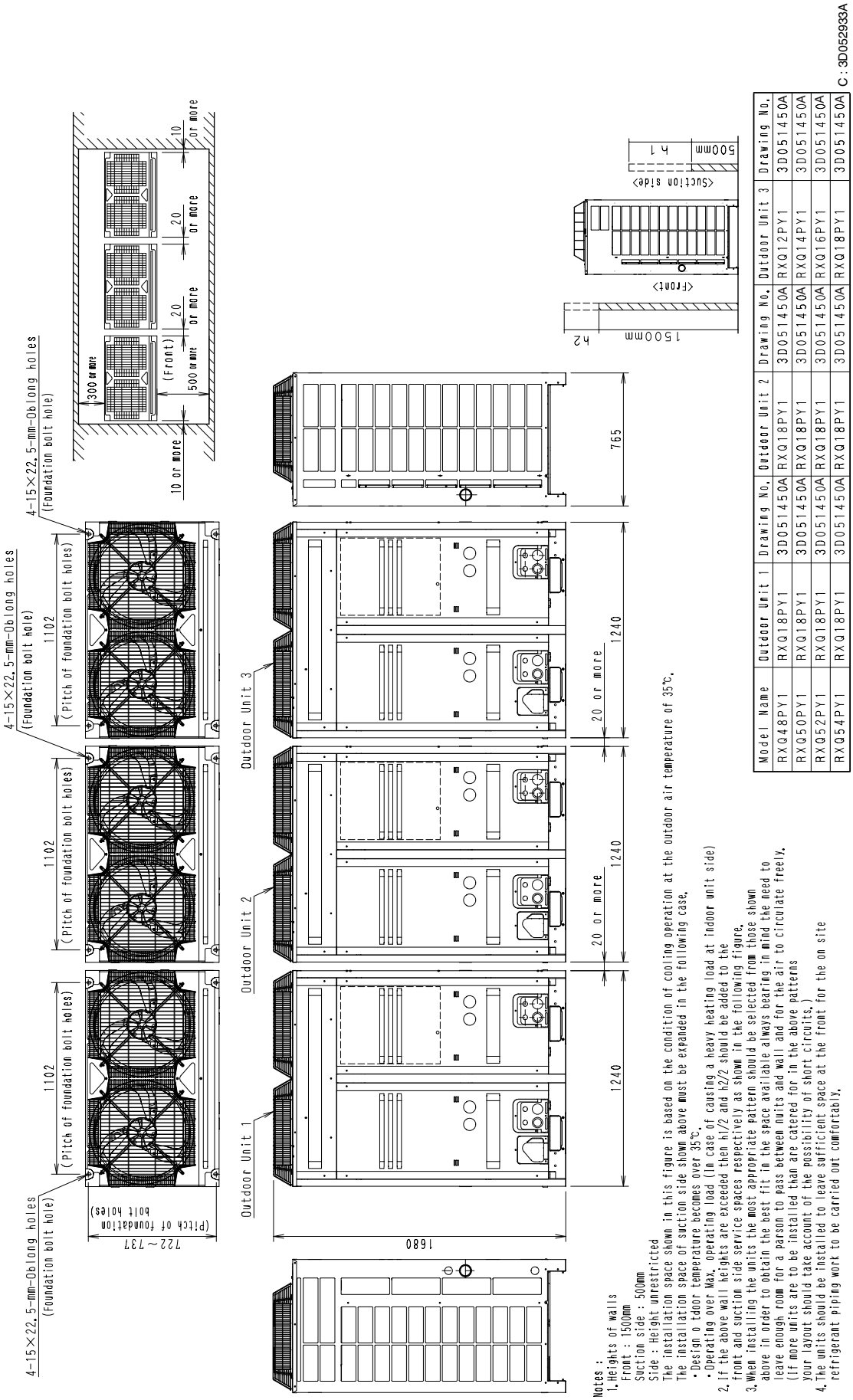

Model Name	Outdoor Unit 1	Drawing No.	Outdoor Unit 2	Drawing No.	Outdoor Unit 3	Drawing No.
RXQ48PY1	RXQ18PY1	3D051450A	RXQ18PY1	3D051450A	RXQ12PY1	3D051450A
RXQ50PY1	RXQ18PY1	3D051450A	RXQ18PY1	3D051450A	RXQ14PY1	3D051450A
RXQ52PY1	RXQ18PY1	3D051450A	RXQ18PY1	3D051450A	RXQ16PY1	3D051450A
RXQ54PY1	RXQ18PY1	3D051450A	RXQ18PY1	3D051450A	RXQ18PY1	3D051450A

C : 3D052933A

Notes :
1. Heights of walls
   Front : 1500mm
   Suction side : 500mm
   Side : Height unrestricted
   The installation space shown in this figure is based on the condition of cooling operation at the outdoor air temperature of 35℃.
   The installation space of suction side shown above must be expanded in the following case.
   • Design o tdoor temperature becomes over 35℃.
   • Operating over Max. operating load (In case of causing a heavy heating load at indoor unit side)
2. If the above wall heights are exceeded then h1/2 and h2/2 should be added to the front and suction side service spaces respectively as shown in the following figure.
3. When installing the units the most appropriate pattern should be selected from those shown above in order to obtain the best fit in the space available always bearing in mind the need to leave enough room for a parson to pass between units and wall and for the air to circulate freely. (If more units are to be installed than are catered for in the above patterns your layout should take account of the possibility of short circuits.)
4. The units should be installed to leave sufficient space at the front for the on site refrigerant piping work to be carried out comfortably.

13

3. Service Space

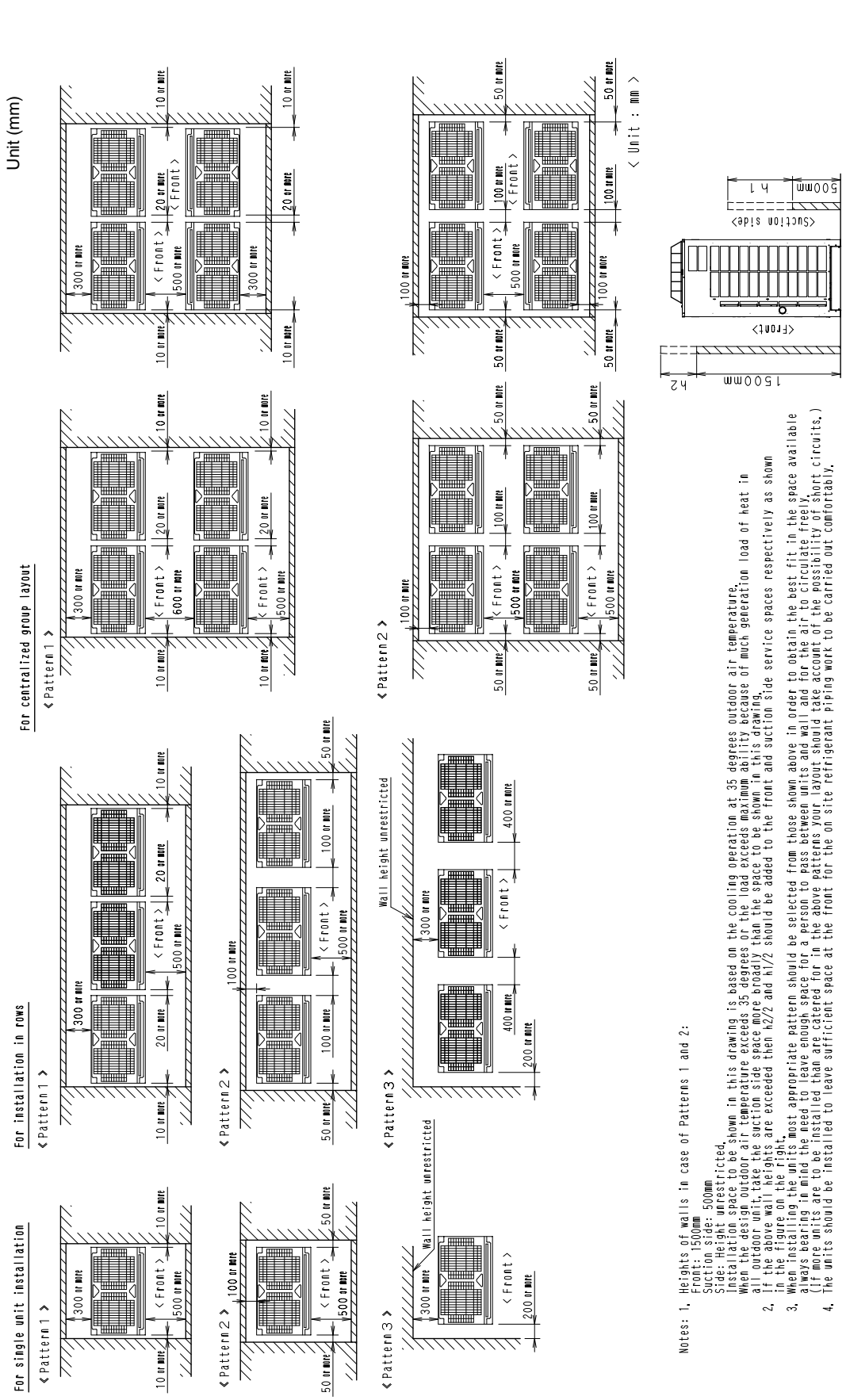

Notes: 1. Heights of walls in case of Patterns 1 and 2:
Front: 1500mm
Suction side: 500mm
Side: Height unrestricted.
Installation space to be shown in this drawing is based on the cooling operation at 35 degrees outdoor air temperature.
When the design outdoor air temperature exceeds 35 degrees or the load exceeds maximum ability because of much generation load of heat in all outdoor unit,take the suction side space more broadly than the space to be shown in this drawing.
2. If the above wall heights are exceeded then h2/2 and h1/2 should be added to the front and suction side service spaces respectively as shown in the figure on the right.
3. When installing the units most appropriate pattern should be selected from those shown above in order to obtain the best fit in the space available always bearing in mind the need to leave enough space for a person to pass between units and wall and for the air to circulate freely.
(If more units are to be installed than are catered for in the above patterns your layout should take account of the possibility of short circuits.)
4. The units should be installed to leave sufficient space at the front for the on site refrigerant piping work to be carried out comfortably.

4. Piping Diagrams

RXQ5PY1

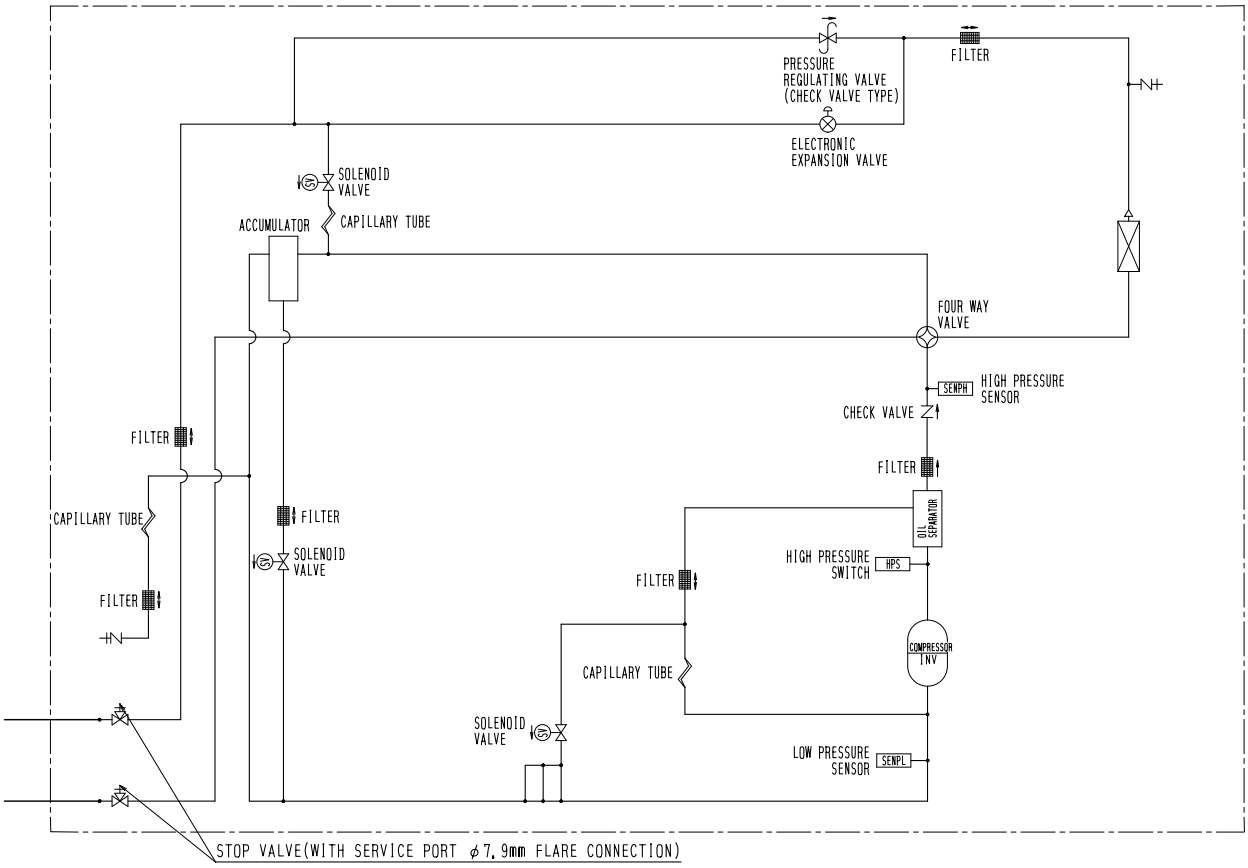

3D050782

13

RXQ8PY1

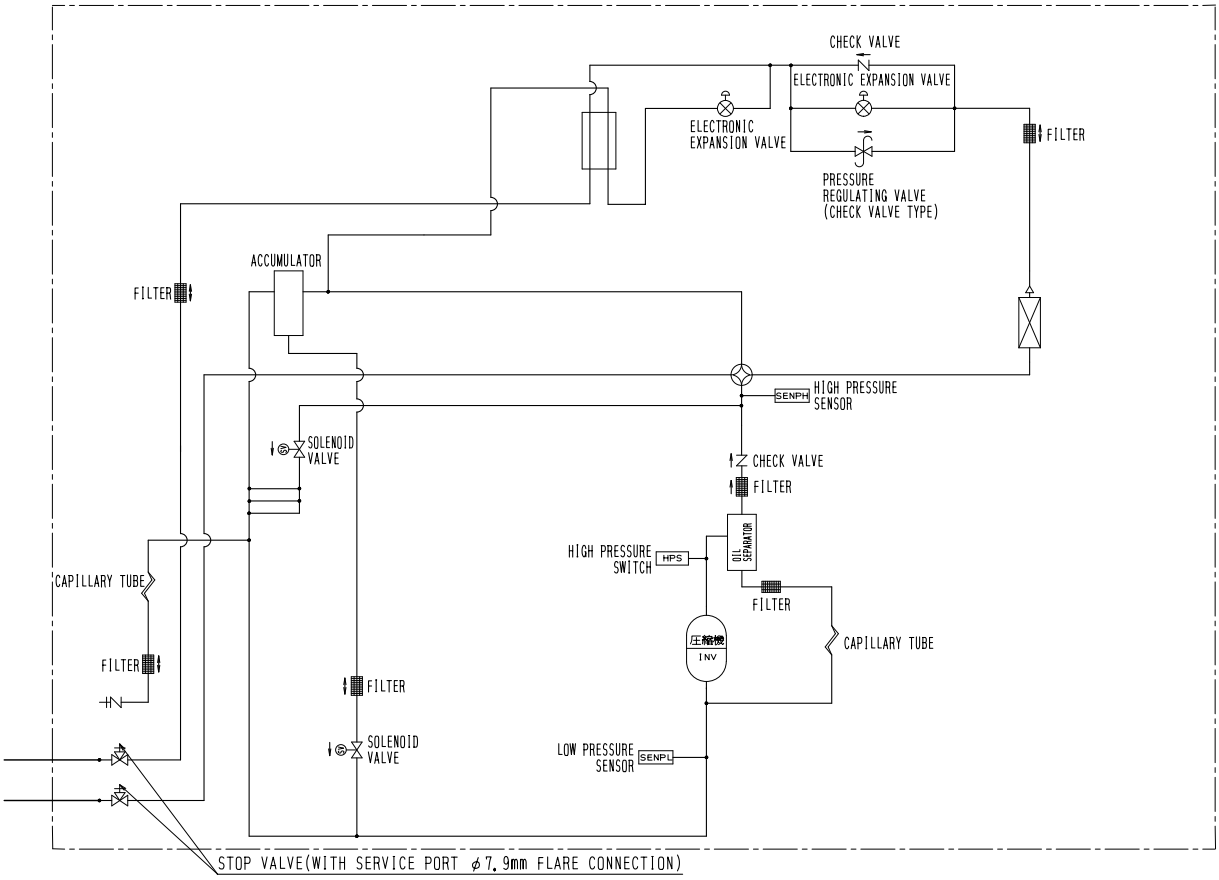

3D050783

RXQ10PY1, RXQ12PY1

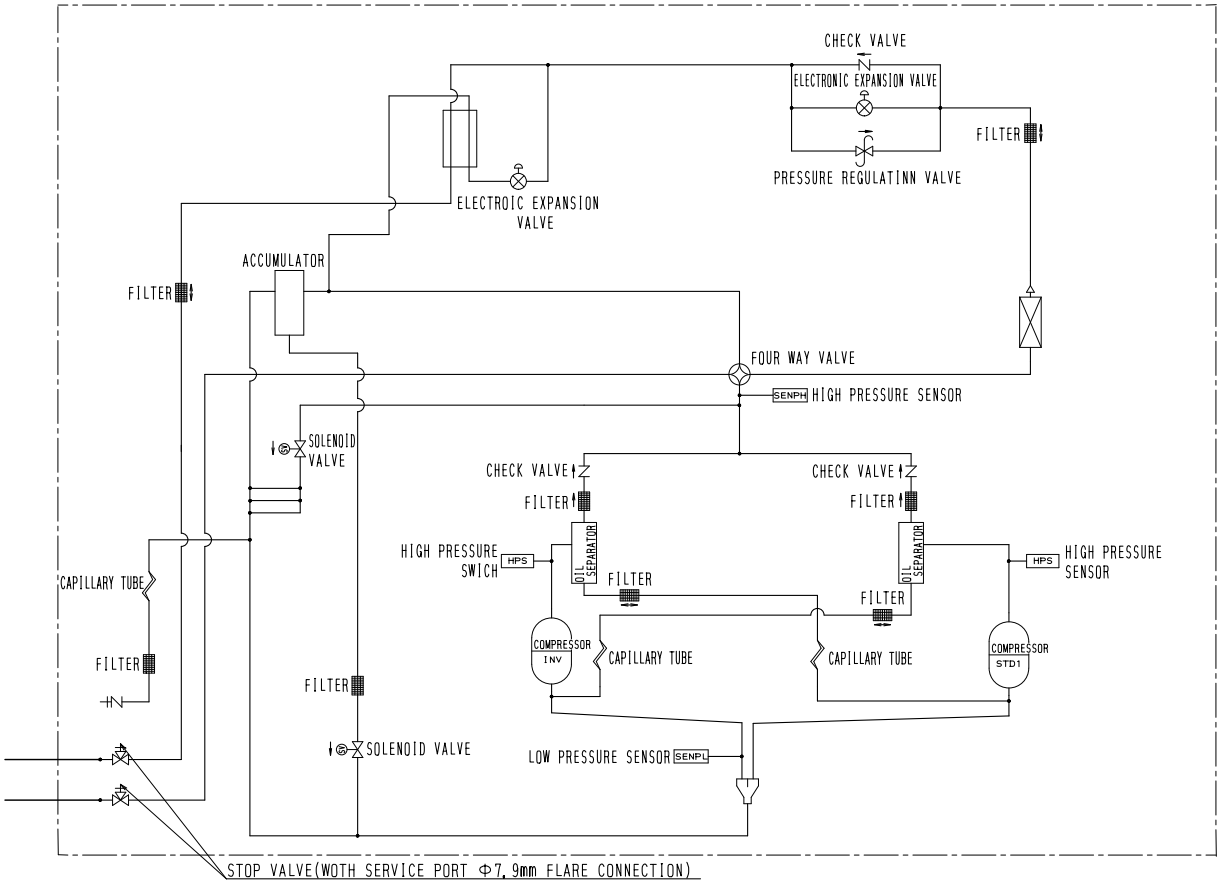

3D050784

13

RXQ14PY1, RXQ16PY1, RXQ18PY1

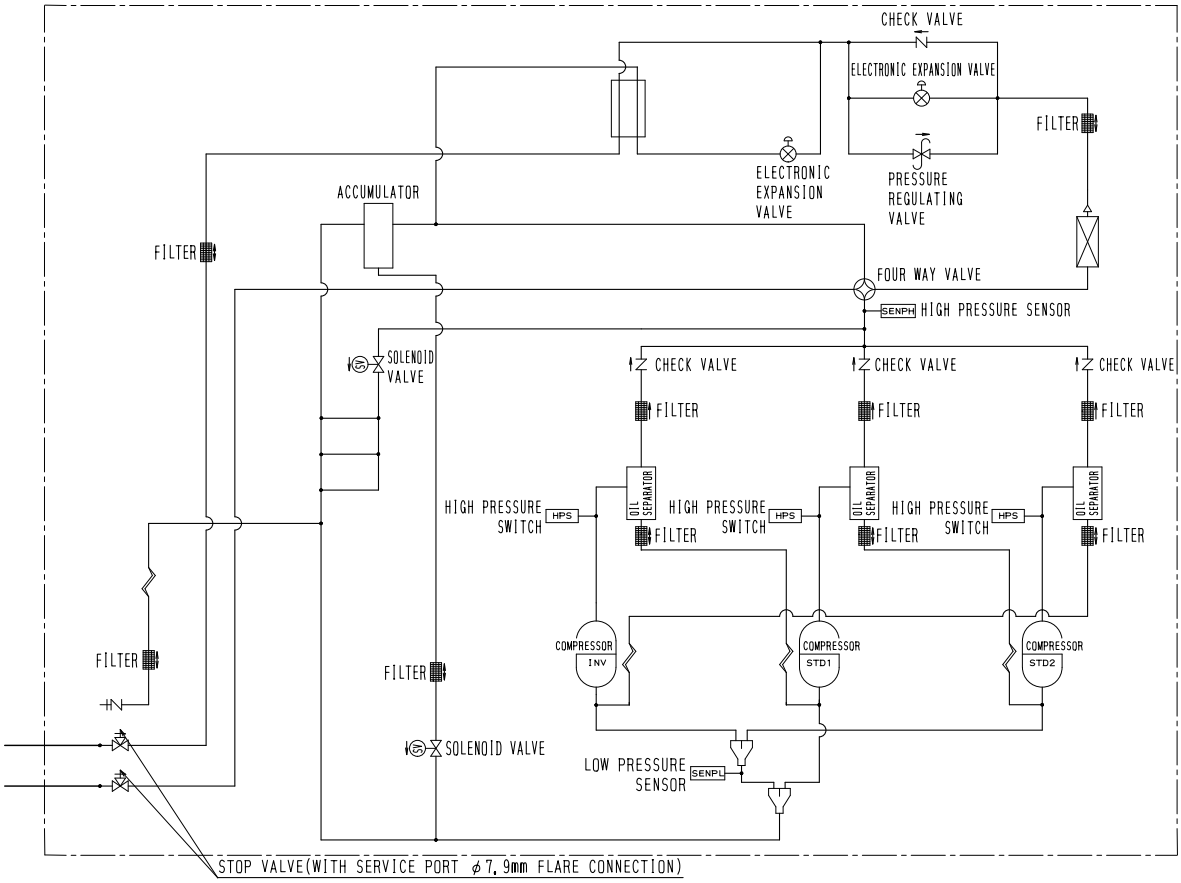

3D050785A

5. Wiring Diagrams

RXQ5PY1

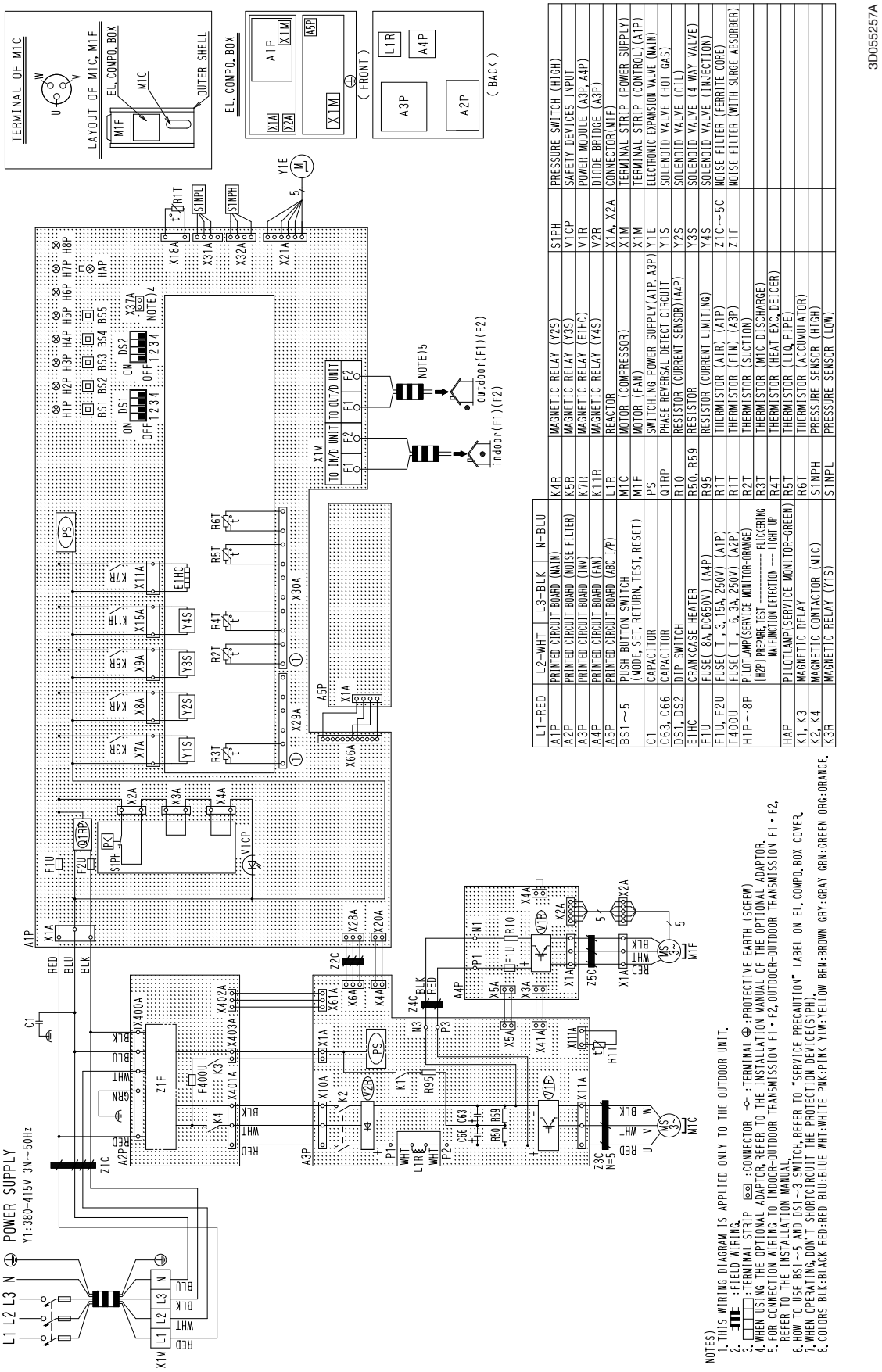

L1-RED	L2-WHT	L3-BLK	N-BLU			
A1P	PRINTED CIRCUIT BOARD (MAIN)		K4R	MAGNETIC RELAY (Y2S)	S1PH	PRESSURE SWITCH (HIGH)
A2P	PRINTED CIRCUIT BOARD (NOISE FILTER)		K5R	MAGNETIC RELAY (Y3S)	V1CP	SAFETY DEVICES INPUT
A3P	PRINTED CIRCUIT BOARD (INV)		K7R	MAGNETIC RELAY (E1HC)	V1R	POWER MODULE (A3P, A4P)
A4P	PRINTED CIRCUIT BOARD (FAN)		K11R	MAGNETIC RELAY (Y4S)	V2R	DIODE BRIDGE (A3P)
A5P	PRINTED CIRCUIT BOARD (ABC I/P)		L1R	REACTOR	X1A, X2A	CONNECTOR(M1F)
BS1～5	PUSH BUTTON SWITCH (MODE, SET, RETURN, TEST, RESET)		M1C	MOTOR (COMPRESSOR)	X1M	TERMINAL STRIP (POWER SUPPLY)
			M1F	MOTOR (FAN)	X1M	TERMINAL STRIP (CONTROL)(A1P)
C1	CAPACITOR		PS	SWITCHING POWER SUPPLY(A1P, A3P)	Y1E	ELECTRONIC EXPANSION VALVE (MAIN)
C63, C66	CAPACITOR		Q1RP	PHASE REVERSAL DETECT CIRCUIT	Y1S	SOLENOID VALVE (HOT GAS)
DS1, DS2	DIP SWITCH		R10	RESISTOR (CURRENT SENSOR)(A4P)	Y2S	SOLENOID VALVE (OIL)
E1HC	CRANKCASE HEATER		R50, R59	RESISTOR	Y3S	SOLENOID VALVE (4 WAY VALVE)
F1U	FUSE(8A, DC650V) (A4P)		R95	RESISTOR (CURRENT LIMITING)	Y4S	SOLENOID VALVE (INJECTION)
F1U, F2U	FUSE(T, 3.15A, 250V) (A1P)		R1T	THERMISTOR (AIR) (A1P)	Z1C～5C	NOISE FILTER (FERRITE CORE)
F400U	FUSE(T, 6.3A, 250V) (A2P)		R1T	THERMISTOR (FIN) (A3P)	Z1F	NOISE FILTER (WITH SURGE ABSORBER)
H1P～8P	PILOTLAMP(SERVICE MONITOR-ORANGE)		R2T	THERMISTOR (SUCTION)		
	[H2P] PREPARE TEST ---------- FLICKERING		R3T	THERMISTOR (M1C DISCHARGE)		
	MALFUNCTION DETECTION ---- LIGHT UP		R4T	THERMISTOR (HEAT EXC.DEFICER)		
HAP	PILOTLAMP(SERVICE MONITOR-GREEN)		R5T	THERMISTOR (LIQ.PIPE)		
K1, K3	MAGNETIC RELAY		R6T	THERMISTOR (ACCUMULATOR)		
K2, K4	MAGNETIC CONTACTOR (M1C)		S1NPH	PRESSURE SENSOR (HIGH)		
K3R	MAGNETIC RELAY (Y1S)		S1NPL	PRESSURE SENSOR (LOW)		

NOTES)
1. THIS WIRING DIAGRAM IS APPLIED ONLY TO THE OUTDOOR UNIT.
2. ▬ :FIELD WIRING.
3. ▭ :TERMINAL STRIP ▭ :CONNECTOR ⏚ :TERMINAL ⊕ :PROTECTIVE EARTH (SCREW)
4. WHEN USING THE OPTIONAL ADAPTOR,REFER TO THE INSTALLATION MANUAL OF THE OPTIONAL ADAPTOR.
5. FOR CONNECTION WIRING TO INDOOR-OUTDOOR TRANSMISSION F1・F2, OUTDOOR-OUTDOOR TRANSMISSION F1・F2, REFER TO THE INSTALLATION MANUAL.
6. HOW TO USE BS1～5 AND DS1～3 SWITCH, REFER TO "SERVICE PRECAUTION" LABEL ON EL. COMPO. BOX COVER.
7. WHEN OPERATING, DON'T SHORTCIRCUIT THE PROTECTION DEVICE(S1PH).
8. COLORS BLK:BLACK RED:RED BLU:BLUE WHT:WHITE PNK:PINK YLW:YELLOW BRN:BROWN GRY:GRAY GRN:GREEN ORG:ORANGE.

3D055257A

13

RXQ8PY1

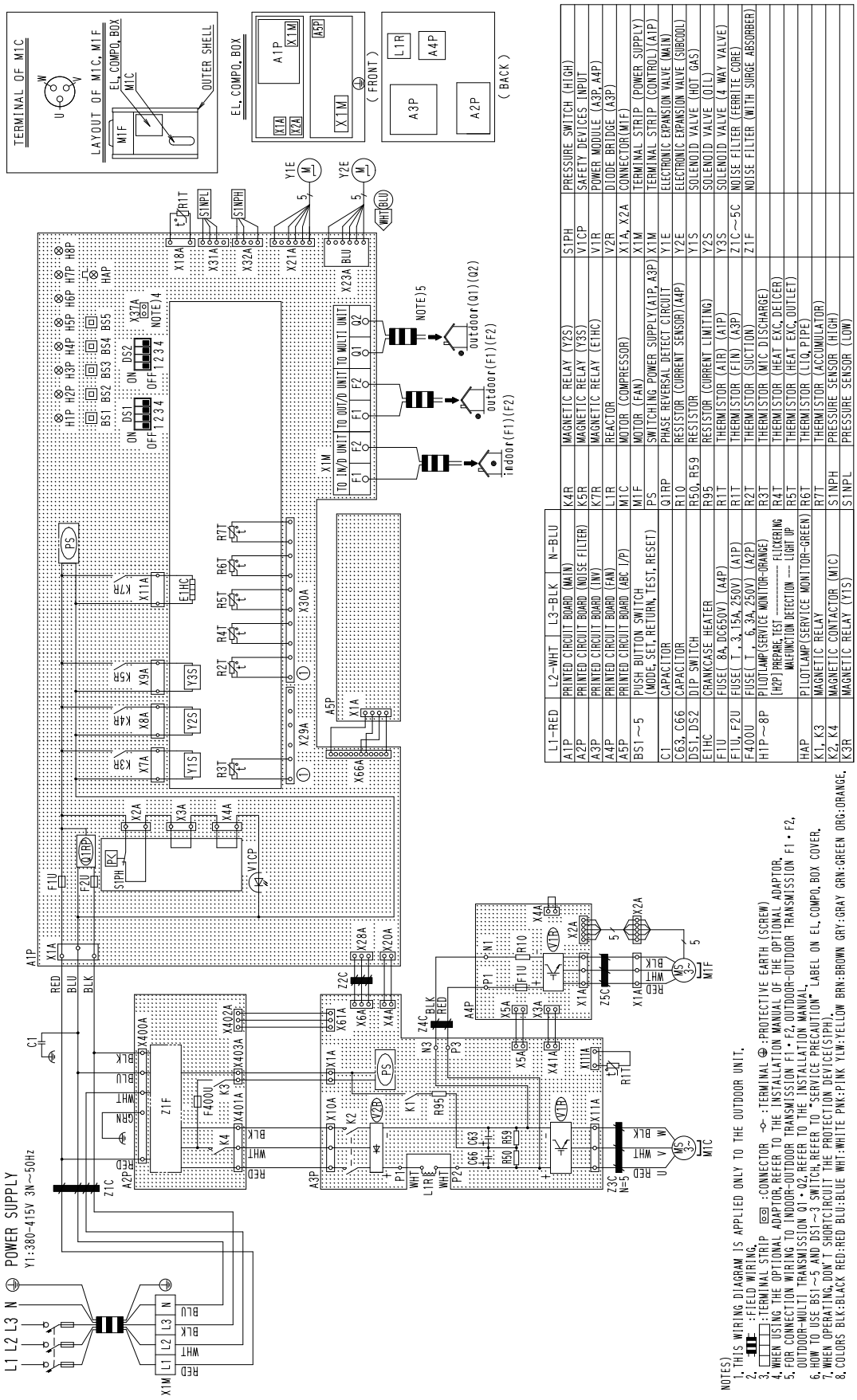

L1-RED	L2-WHT	L3-BLK	N-BLU				
A1P	PRINTED CIRCUIT BOARD (MAIN)			K4R	MAGNETIC RELAY (Y2S)	S1PH	PRESSURE SWITCH (HIGH)
A2P	PRINTED CIRCUIT BOARD (NOISE FILTER)			K5R	MAGNETIC RELAY (Y3S)	V1CP	SAFETY DEVICES INPUT
A3P	PRINTED CIRCUIT BOARD (INV)			K7R	MAGNETIC RELAY (E1HC)	V1R	POWER MODULE (A3P, A4P)
A4P	PRINTED CIRCUIT BOARD (FAN)			L1R	REACTOR	V2R	DIODE BRIDGE (A3P)
A5P	PRINTED CIRCUIT BOARD (ABC I/P)			M1C	MOTOR (COMPRESSOR)	X1A, X2A	CONNECTOR(M1F)
BS1~5	PUSH BUTTON SWITCH (MODE, SET, RETURN, TEST, RESET)			M1F	MOTOR (FAN)	X1M	TERMINAL STRIP (POWER SUPPLY)
				PS	SWITCHING POWER SUPPLY(A1P, A3P)	X1M	TERMINAL STRIP (CONTROL)(A1P)
C1	CAPACITOR			Q1RP	PHASE REVERSAL DETECT CIRCUIT	Y1E	ELECTRONIC EXPANSION VALVE (MAIN)
C63, C66	CAPACITOR			R1O	RESISTOR (CURRENT SENSOR)(A4P)	Y2E	ELECTRONIC EXPANSION VALVE (SUBCOOL)
DS1, DS2	DIP SWITCH			R50, R59	RESISTOR	Y1S	SOLENOID VALVE (HOT GAS)
E1HC	CRANKCASE HEATER			R95	RESISTOR (CURRENT LIMITING)	Y2S	SOLENOID VALVE (OIL)
F1U	FUSE(8A, DC650V) (A4P)			R1T	THERMISTOR (AIR) (A1P)	Y3S	SOLENOID VALVE (4 WAY VALVE)
F1U, F2U	FUSE(T , 3.15A, 250V) (A1P)			R1T	THERMISTOR (FIN) (A3P)	Z1C~5C	NOISE FILTER (FERRITE CORE)
F400U	FUSE(T , 6.3A, 250V) (A2P)			R2T	THERMISTOR (SUCTION)	Z1F	NOISE FILTER (WITH SURGE ABSORBER)
H1P~8P	PILOTLAMP(SERVICE MONITOR-ORANGE) [H2P] PREPARE TEST ---------- FLICKERING WHEN FUNCTION DETECTION ---- LIGHT UP			R3T	THERMISTOR (M1C DISCHARGE)		
				R4T	THERMISTOR (HEAT EXC.DEICER)		
				R5T	THERMISTOR (HEAT EXC.OUTLET)		
HAP	PILOTLAMP(SERVICE MONITOR-GREEN)			R6T	THERMISTOR (LIQ.PIPE)		
K1, K3	MAGNETIC RELAY			R7T	THERMISTOR (ACCUMULATOR)		
K2, K4	MAGNETIC CONTACTOR (M1C)			S1NPH	PRESSURE SENSOR (HIGH)		
K3R	MAGNETIC RELAY (Y1S)			S1NPL	PRESSURE SENSOR (LOW)		

RXQ10PY1

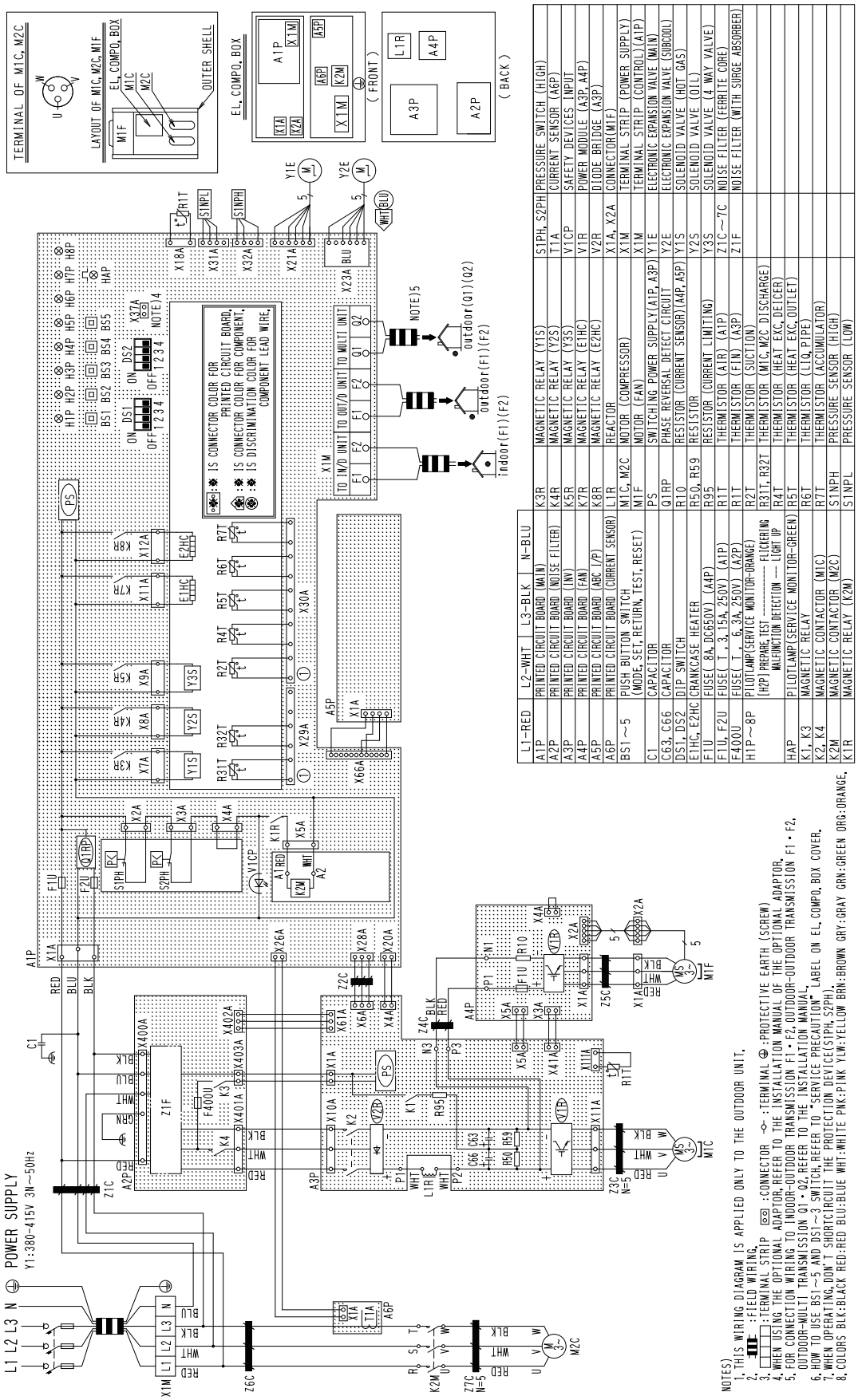

L1-RED	L2-WHT	L3-BLK	N-BLU
A1P	PRINTED CIRCUIT BOARD (MAIN)	K3R	MAGNETIC RELAY (Y1S)
A2P	PRINTED CIRCUIT BOARD (NOISE FILTER)	K4R	MAGNETIC RELAY (Y2S)
A3P	PRINTED CIRCUIT BOARD (INV)	K5R	MAGNETIC RELAY (Y3S)
A4P	PRINTED CIRCUIT BOARD (FAN)	K7R	MAGNETIC RELAY (E1HC)
A5P	PRINTED CIRCUIT BOARD (ABC I/P)	K8R	MAGNETIC RELAY (E2HC)
A6P	PRINTED CIRCUIT BOARD (CURRENT SENSOR)	L1R	REACTOR
BS1~5	PUSH BUTTON SWITCH (MODE, SET, RETURN, TEST, RESET)	M1C, M2C	MOTOR (COMPRESSOR)
		M1F	MOTOR (FAN)
C1	CAPACITOR	PS	SWITCHING POWER SUPPLY(A1P, A3P)
C63, C66	CAPACITOR	Q1RP	PHASE REVERSAL DETECT CIRCUIT
DS1, DS2	DIP SWITCH	R1O	RESISTOR (CURRENT SENSOR)(A4P, A5P)
E1HC, E2HC	CRANKCASE HEATER	R50, R59	RESISTOR
F1U	FUSE(8A, DC650V) (A4P)	R95	RESISTOR (CURRENT LIMITING)
F1U, F2U	FUSE(T , 3.15A, 250V) (A1P)	R1T	THERMISTOR (AIR) (A1P)
F40U	FUSE(T , 6.3A, 250V) (A2P)	R1T	THERMISTOR (FIN) (A3P)
H1P~8P	PILOTLAMP(SERVICE MONITOR-ORANGE) (H2P)PREPARE TEST ---------- FLICKERING MALFUNCTION DETECTION ---- LIGHT UP	R2T	THERMISTOR (SUCTION)
		R31T, R32T	THERMISTOR (M1C, M2C DISCHARGE)
HAP	PILOTLAMP(SERVICE MONITOR-GREEN)	R4T	THERMISTOR (HEAT EXC.DEICER)
		R5T	THERMISTOR (HEAT EXC.OUTLET)
K1, K3	MAGNETIC RELAY	R6T	THERMISTOR (LIQ.PIPE)
K2, K4	MAGNETIC CONTACTOR (M1C)	R7T	THERMISTOR (ACCUMULATOR)
K2M	MAGNETIC CONTACTOR (M2C)	S1NPH	PRESSURE SENSOR (HIGH)
K1R	MAGNETIC RELAY (K2M)	S1NPL	PRESSURE SENSOR (LOW)
S1PH, S2PH	PRESSURE SWITCH (HIGH)		
T1A	CURRENT SENSOR (A6P)		
V1CP	SAFETY DEVICES INPUT		
V1R	POWER MODULE (A3P, A4P)		
V2R	DIODE BRIDGE (A3P)		
X1A, X2A	CONNECTOR(M1F)		
X1M	TERMINAL STRIP (POWER SUPPLY)		
X1M	TERMINAL STRIP (CONTROL)(A1P)		
Y1E	ELECTRONIC EXPANSION VALVE (MAIN)		
Y2E	ELECTRONIC EXPANSION VALVE (SUBCOOL)		
Y1S	SOLENOID VALVE (HOT GAS)		
Y2S	SOLENOID VALVE (OIL)		
Y3S	SOLENOID VALVE (4 WAY VALVE)		
Z1C~7C	NOISE FILTER (FERRITE CORE)		
Z1F	NOISE FILTER (WITH SURGE ABSORBER)		

3D055259A

13

RXQ12PY1

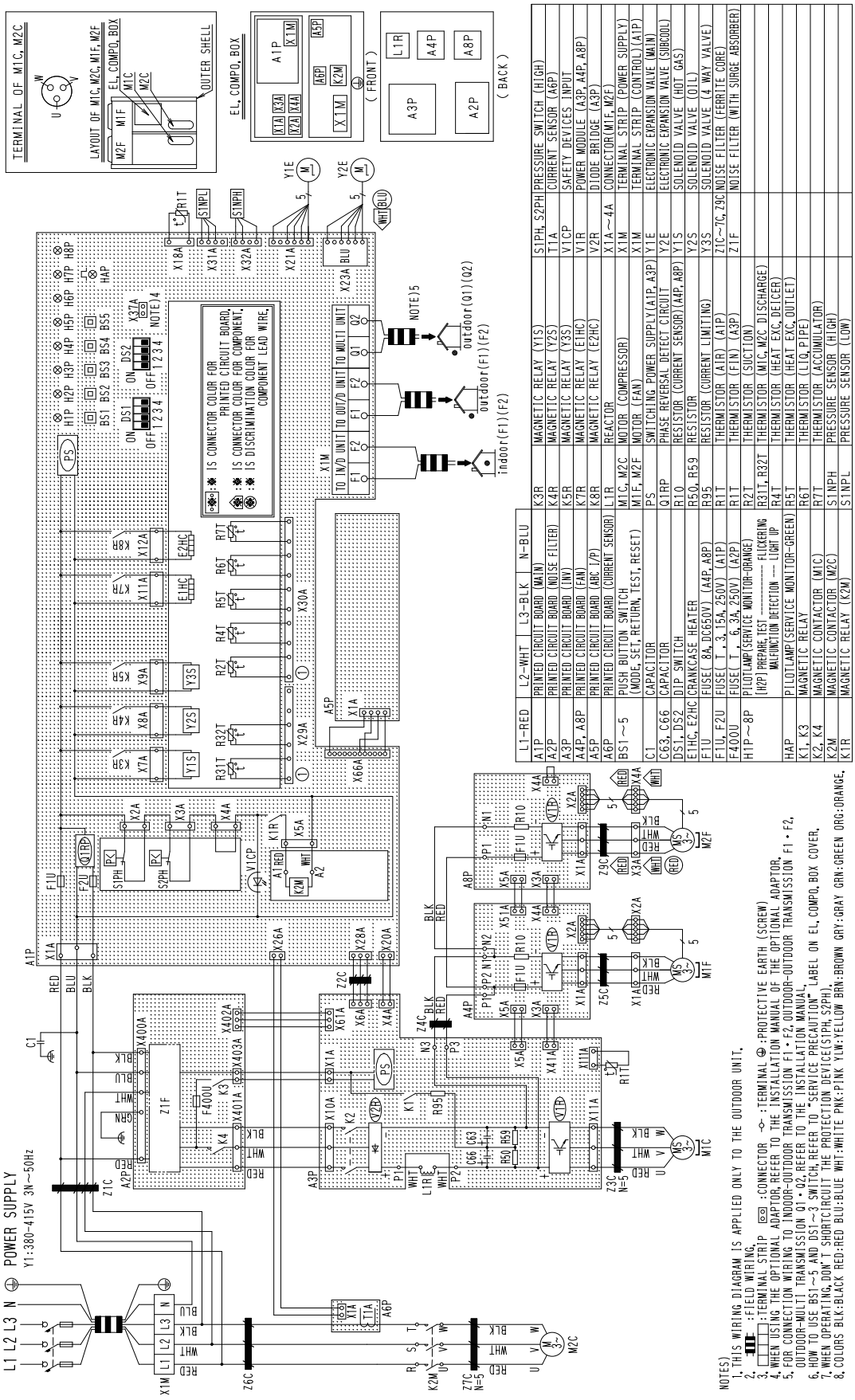

L1-RED	L2-WHT	L3-BLK	N-BLU
A1P	PRINTED CIRCUIT BOARD (MAIN)	K3R	MAGNETIC RELAY (Y1S)
A2P	PRINTED CIRCUIT BOARD (NOISE FILTER)	K4R	MAGNETIC RELAY (Y2S)
A3P	PRINTED CIRCUIT BOARD (INV)	K5R	MAGNETIC RELAY (Y3S)
A4P, A8P	PRINTED CIRCUIT BOARD (FAN)	K7R	MAGNETIC RELAY (E1HC)
A5P	PRINTED CIRCUIT BOARD (ABC J/P)	K8R	MAGNETIC RELAY (E2HC)
A6P	PRINTED CIRCUIT BOARD (CURRENT SENSOR)	L1R	REACTOR
BS1~5	PUSH BUTTON SWITCH (MODE, SET, RETURN, TEST, RESET)	M1C, M2C	MOTOR (COMPRESSOR)
		M1F, M2F	MOTOR (FAN)
C1	CAPACITOR	PS	SWITCHING POWER SUPPLY(A1P, A3P)
C63, C66	CAPACITOR	Q1RP	PHASE REVERSAL DETECT CIRCUIT
DS1, DS2	DIP SWITCH	R1O	RESISTOR (CURRENT SENSOR)(A4P, A8P)
E1HC, E2HC	CRANKCASE HEATER	R50, R59	RESISTOR
F1U	FUSE(8A, DC650V) (A4P, A8P)	R95	RESISTOR (CURRENT LIMITING)
F1U, F2U	FUSE(T , 3.15A, 250V) (A1P)	R1T	THERMISTOR (AIR) (A1P)
F400U	FUSE(T , 6.3A, 250V) (A2P)	R1T	THERMISTOR (FIN) (A3P)
H1P~8P	PILOTLAMP(SERVICE MONITOR-ORANGE) (H2P) PREPARE TEST ---------- FLICKERING WALFUNCTION DETECTION ---- LIGHT UP	R2T	THERMISTOR (SUCTION)
		R31T, R32T	THERMISTOR (M1C, M2C DISCHARGE)
HAP	PILOTLAMP(SERVICE MONITOR-GREEN)	R4T	THERMISTOR (HEAT EXC. DEICER)
		R5T	THERMISTOR (HEAT EXC. OUTLET)
K1, K3	MAGNETIC RELAY	R6T	THERMISTOR (LIQ. PIPE)
K2, K4	MAGNETIC CONTACTOR (M1C)	R7T	THERMISTOR (ACCUMULATOR)
K2M	MAGNETIC CONTACTOR (M2C)	S1NPH	PRESSURE SENSOR (HIGH)
K1R	MAGNETIC RELAY (K2M)	S1NPL	PRESSURE SENSOR (LOW)
S1PH, S2PH	PRESSURE SWITCH (HIGH)		
T1A	CURRENT SENSOR (A6P)		
V1CP	SAFETY DEVICES INPUT		
V1R	POWER MODULE (A3P, A4P, A8P)		
V2R	DIODE BRIDGE (A3P)		
X1A~4A	CONNECTOR(M1F, M2F)		
X1M	TERMINAL STRIP (POWER SUPPLY)		
X1M	TERMINAL STRIP (CONTROL)(A1P)		
Y1E	ELECTRONIC EXPANSION VALVE (MAIN)		
Y2E	ELECTRONIC EXPANSION VALVE (SUBCOOL)		
Y1S	SOLENOID VALVE (HOT GAS)		
Y2S	SOLENOID VALVE (OIL)		
Y3S	SOLENOID VALVE (4 WAY VALVE)		
Z1C~7C, Z9C	NOISE FILTER (FERRITE CORE)		
Z1F	NOISE FILTER (WITH SURGE ABSORBER)		

3D055260A

RXQ14PY1, RXQ16PY1, RXQ18PY1

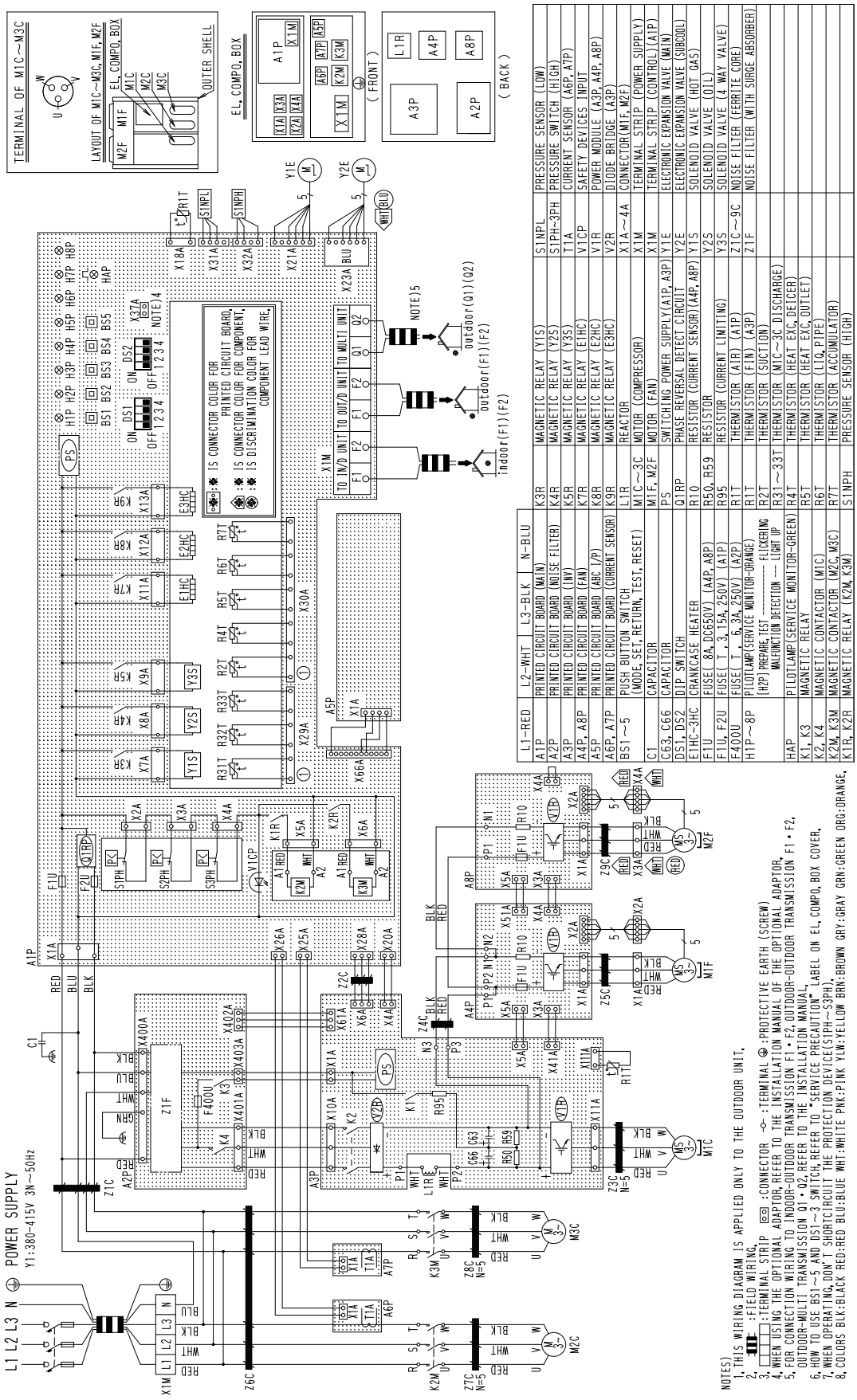

L1-RED	L2-WHT	L3-BLK	N-BLU
A1P	PRINTED CIRCUIT BOARD (MAIN)	K3R	MAGNETIC RELAY (Y1S)
A2P	PRINTED CIRCUIT BOARD (NOISE FILTER)	K4R	MAGNETIC RELAY (Y2S)
A3P	PRINTED CIRCUIT BOARD (INV)	K5R	MAGNETIC RELAY (Y3S)
A4P, A8P	PRINTED CIRCUIT BOARD (FAN)	K7R	MAGNETIC RELAY (E1HC)
A5P	PRINTED CIRCUIT BOARD (ABC 1/2)	K8R	MAGNETIC RELAY (E2HC)
A6P, A7P	PRINTED CIRCUIT BOARD (CURRENT SENSOR)	K9R	MAGNETIC RELAY (E3HC)
BS1~5	PUSH BUTTON SWITCH (MODE, SET, RETURN, TEST, RESET)	L1R	REACTOR
C1	CAPACITOR	M1C~3C	MOTOR (COMPRESSOR)
C63, C66	CAPACITOR	M1F, M2F	MOTOR (FAN)
DS1, DS2	DIP SWITCH	PS	SWITCHING POWER SUPPLY(A1P, A3P)
E1HC~3HC	CRANKCASE HEATER	Q1RP	PHASE REVERSAL DETECT CIRCUIT
F1U	FUSE(8A, DC650V) (A4P, A8P)	R10	RESISTOR (CURRENT SENSOR)(A4P, A8P)
F1U, F2U	FUSE(T 3.15A, 250V) (A1P)	R50, R59	RESISTOR
F400U	FUSE(T 6.3A, 250V) (A2P)	R95	RESISTOR (CURRENT LIMITING)
H1P~8P	PILOTLAMP(SERVICE MONITOR-ORANGE)	R1T	THERMISTOR (AIR) (A1P)
	[H2P] PREPARE TEST ---- FLICKERING MALFUNCTION DETECTION ---- LIGHT UP	R1T	THERMISTOR (FIN) (A3P)
HAP	PILOTLAMP(SERVICE MONITOR-GREEN)	R2T	THERMISTOR (SUCTION)
K1, K3	MAGNETIC RELAY	R31~33T	THERMISTOR (M1C~3C DISCHARGE)
K2, K4	MAGNETIC CONTACTOR (M1C)	R4T	THERMISTOR (HEAT EXC. DEICER)
K2M, K3M	MAGNETIC CONTACTOR (M2C, M3C)	R5T	THERMISTOR (HEAT EXC. OUTLET)
K1R, K2R	MAGNETIC RELAY (K2M, K3M)	R6T	THERMISTOR (LIQ. PIPE)
		R7T	THERMISTOR (ACCUMULATOR)
		S1NPH	PRESSURE SENSOR (HIGH)
		S1NPL	PRESSURE SENSOR (LOW)
		S1PH~3PH	PRESSURE SWITCH (HIGH)
		T1A	CURRENT SENSOR (A6P, A7P)
		V1CP	SAFETY DEVICES INPUT
		V1R	POWER MODULE (A3P, A4P, A8P)
		V2R	DIODE BRIDGE (A3P)
		X1A~4A	CONNECTOR(M1F, M2F)
		X1M	TERMINAL STRIP (POWER SUPPLY)
		X1M	TERMINAL STRIP (CONTROL)(A1P)
		Y1E	ELECTRONIC EXPANSION VALVE (MAIN)
		Y2E	ELECTRONIC EXPANSION VALVE (SUBCOOL)
		Y1S	SOLENOID VALVE (HOT GAS)
		Y2S	SOLENOID VALVE (OIL)
		Y3S	SOLENOID VALVE (4 WAY VALVE)
		Z1C~9C	NOISE FILTER (FERRITE CORE)
		Z1F	NOISE FILTER (WITH SURGE ABSORBER)

NOTES)
1. THIS WIRING DIAGRAM IS APPLIED ONLY TO THE OUTDOOR UNIT.
2. : FIELD WIRING.
3. : TERMINAL STRIP : CONNECTOR : TERMINAL : PROTECTIVE EARTH (SCREW)
4. WHEN USING THE OPTIONAL ADAPTOR, REFER TO THE INSTALLATION MANUAL OF THE OPTIONAL ADAPTOR.
5. FOR CONNECTION WIRING TO INDOOR-OUTDOOR TRANSMISSION F1・F2, OUTDOOR-OUTDOOR TRANSMISSION F1・F2, OUTDOOR-MULTI TRANSMISSION Q1・Q2, REFER TO THE INSTALLATION MANUAL.
6. HOW TO USE BS1~5 AND DS1~3 SWITCH, REFER TO "SERVICE PRECAUTION" LABEL ON EL. COMPO. BOX COVER.
7. WHEN OPERATING, DON'T SHORT CIRCUIT THE PROTECTION DEVICE(S1PH~S3PH).
8. COLORS BLK:BLACK RED:RED BLU:BLUE WHT:WHITE PNK:PINK YLW:YELLOW BRN:BROWN GRY:GRAY GRN:GREEN ORG:ORANGE.

13

6. Field Wiring

RXQ5P, 8P, 10P, 12P, 14P, 16P, 18PY1

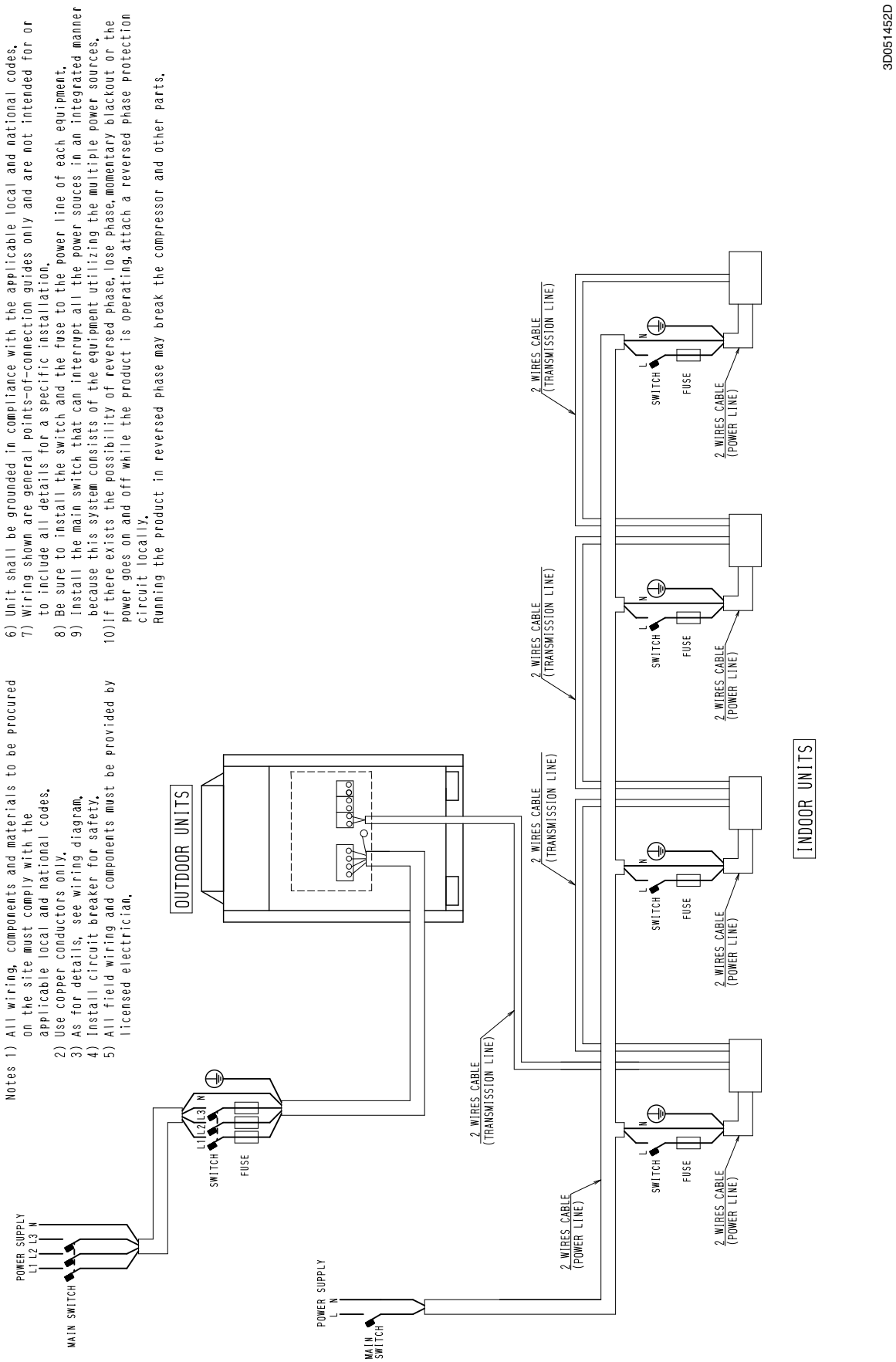

RXQ20P, 22P, 24P, 26P, 28P, 30P, 32P, 34P, 36PY1

Notes 1) All wiring, components and materials to be procured on the site must comply with the applicable local and national codes.
2) Use copper conductors only.
3) As for details, see wiring diagram.
4) Install circuit breaker for safety.
5) All field wiring and components must be provided by licensed electrician.
6) Unit shall be grounded in compliance with the applicable local and national codes.
7) Wiring shown are general points-of-connection guides only and are not intended for or to include all details for a specific installation.
8) Be sure to install the switch and the fuse to the power line of each equipment.
9) Install the main switch that can interrupt all the power souces in an integrated manner because this system consists of the equipment utilizing the multiple power sources.
10) The capacity of UNIT1 must be larger than UNIT2 when the power source is connected in series between the units.
11) If there exists the possibility of reversed phase, lose phase, momentary blackout or the power goes on and off while the product is operating, attach a reversed phase protection circuit locally.
Running the product in reversed phase may break the compressor and other parts.

When the power source is supplied to each outdoor unit individually.

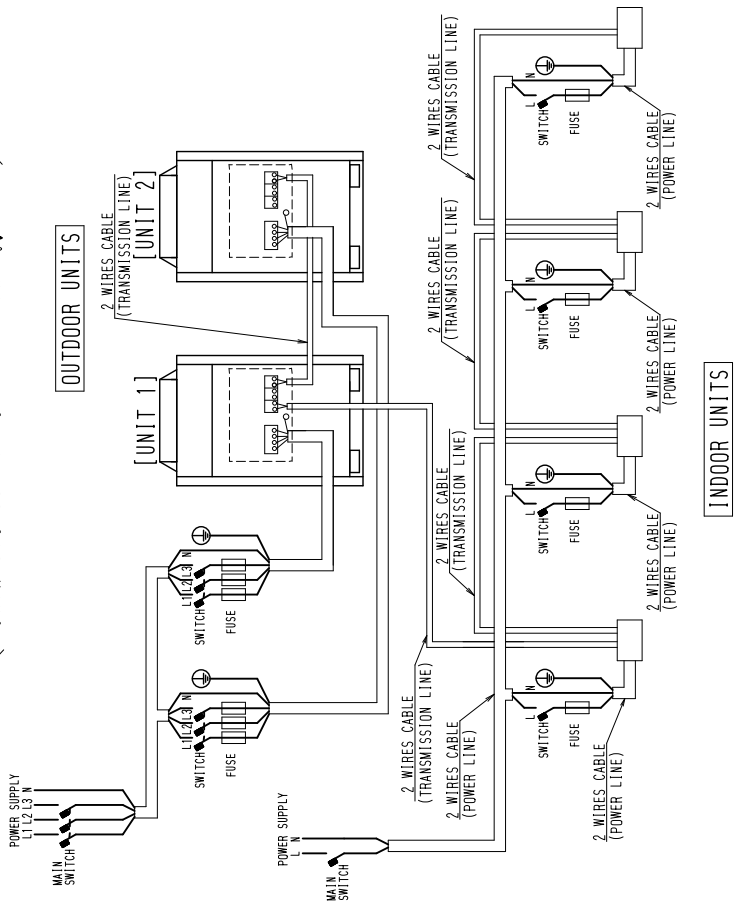

When the power source is connected in series between the units.

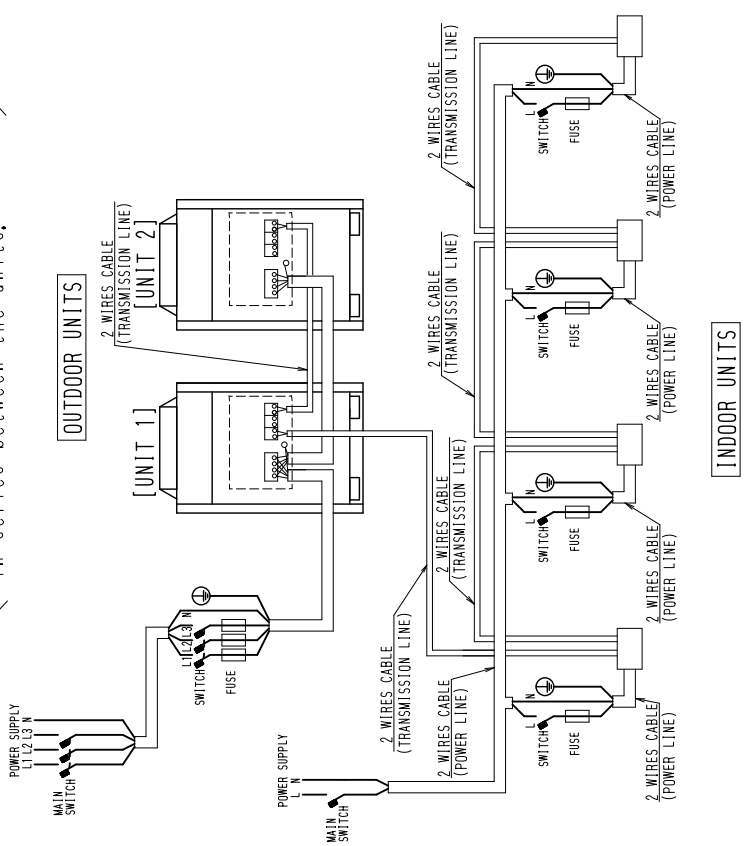

3D052261B

13

RXQ38P, 40P, 42P, 44P, 46P, 48P, 50P, 52P, 54PY1

Notes 1) All wiring, components and materials to be procured on the site must comply with the applicable local and national codes.
2) Use copper conductors only.
3) As for details, see wiring diagram.
4) Install circuit breaker for safety.
5) All field wiring and components must be provided by licensed electrician.
6) Unit shall be grounded in compliance with the applicable local and national codes.
7) Wiring shown are general points-of-connection guides only and are not intended for or to include all details for a specific installation.
8) Be sure to install the switch and the fuse to the power line of each equipment.
9) Install the main switch that can interrupt all the power souces in an integrated manner because this system consists of the equipment utilizing the multiple power sources.
10) The capacity of UNIT1 must be larger than UNIT2 when the power source is connected in series between the units.
11) If there exists the possibility of reversed phase, lose phase, momentary blackout or the power goes on and off while the product is operating, attach a reversed phase protection circuit locally.
Running the product in reversed phase may break the compressor and other parts.

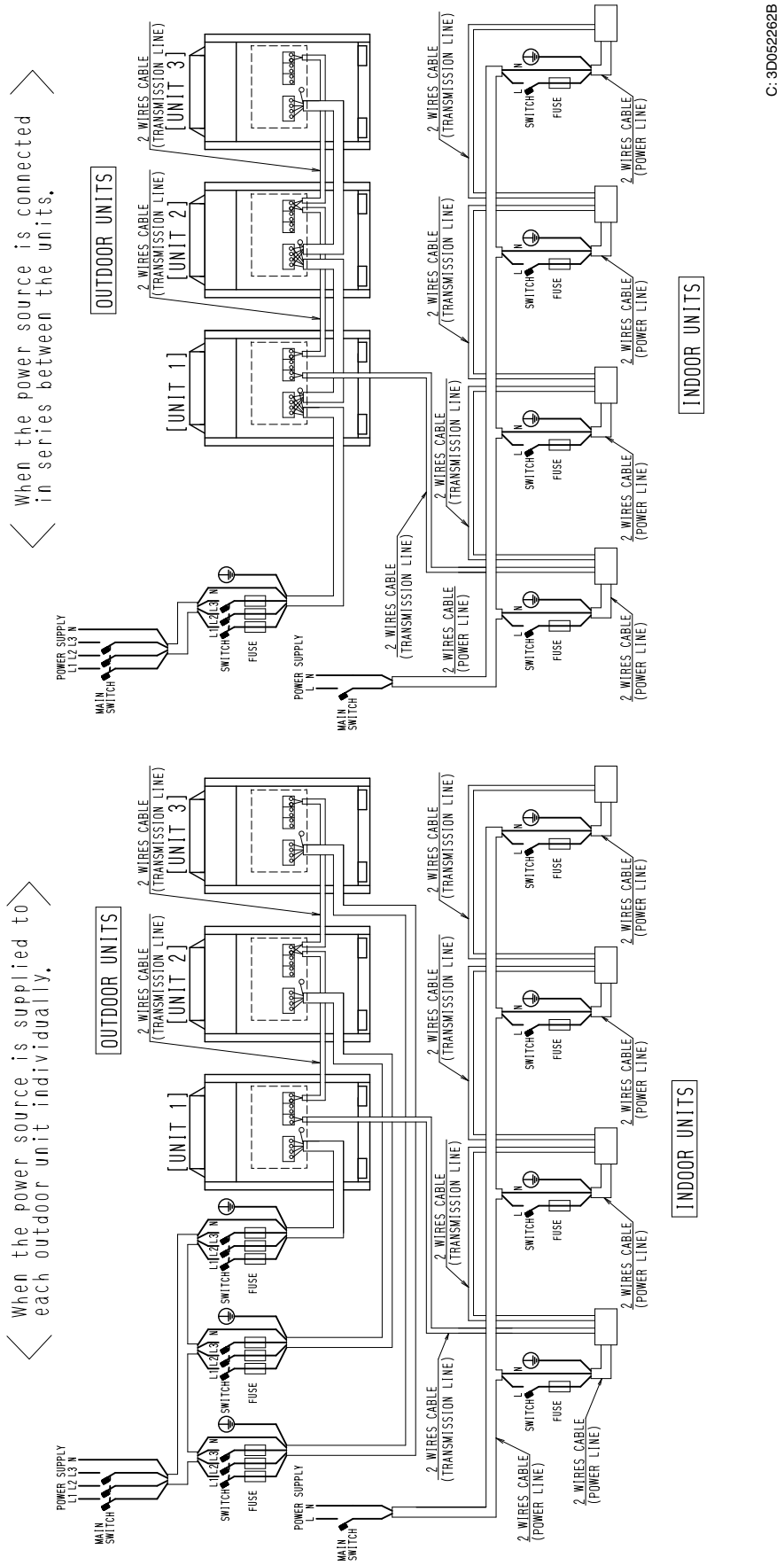

7. Electric Characteristics

7.1 50Hz

RXQ5, 8, 10, 12, 14, 16, 18PY1

Model Name	Units				Power supply			Comp.		OFM	
	Hz	Volts	Min.	Max.	MCA	TOCA	MFA	MSC	RLA	KW	FLA
RX(Y)Q5PY1	50	380	342	456	11.9	15.6	15	—	6.1	0.35	0.4
		400						—	5.8		
		415						—	5.6		
RX(Y)Q8PY1 RZYQ7PY1 RZYQ8PY1	50	380	342	456	18.5	16.5	25	—	8.6	0.75	0.7
		400						—	8.2		
		415						—	7.9		
RX(Y)Q10PY1 RZYQ10PY1	50	380	342	456	21.6	31.5	25	78	4.7+7.2	0.75	0.9
		400						74	4.5+6.8		
		415						72	4.3+6.6		
RX(Y)Q12PY1	50	380	342	456	22.7	31.5	25	79	6.5+7.0	0.35×2	0.6×2
		400						75	6.2+6.7		
		415						72	6.0+6.4		
RX(Y)Q14PY1	50	380	342	456	31.5	46.4	35	89	3.6+7.9×2	0.35×2	0.6×2
		400						84	3.4+7.5×2		
		415						81	3.3+7.3×2		
RX(Y)Q16PY1	50	380	342	456	31.5	46.4	35	90	6.4+8.0×2	0.35×2	0.6×2
		400						85	6.1+7.6×2		
		415						82	5.9+7.3×2		
RX(Y)Q18PY1	50	380	342	456	32.5	48.3	40	90	9.4+8.3×2	0.75×2	0.7×2
		400						85	9.0+7.8×2		
		415						82	8.6+7.6×2		

Symbols:
MCA :Min. Circuit Amps. (A)
TOCA :Total Over-current Amps. (A)
MFA :Max. Fuse Amps. (A)
MSC :Max. Starting current
RLA :Rated Load Amps. (A)
OFM :Outdoor Fan Motor
FLA :Full Load Amps. (A)
kW :Rated Motor Output(kW)

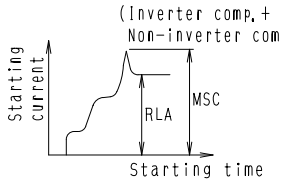

The relationship between the starting time and the starting current.

Notes:
1. RLA is based on the following conditions.
   Indoor temp. 27℃ DB/19.0℃ WB
   Outdoor temp. 35℃ DB
2. TOCA means the total value of each OC set.
3. MSC means the Max. current during the starting of compressor.
4. Voltage range
   Units are suitable for use on electrical systems where voltage supplied to unit terminal is not below or above listed range limits.
5. Maximum allowable voltage variation between phases is 2%.
6. Select wire size based on the larger value of MCA or TOCA.
7. MFA is used to select the circuit breaker and the ground fault circuit interrupter (earth leakage circuit breaker).

3D052399C

RXQ20, 22, 24, 26, 28, 30, 32PY1

Model Name			Units				Power supply			Comp.		OFM	
Combination Unit	Independent Unit		Hz	Volts	Min.	Max.	MCA	TOCA	MFA	MSC	RLA	KW	FLA
RX(Y)Q20PY1	RX(Y)Q8PY1	RX(Y)Q12PY1	50	380	342	456	41.2	48.0	50	83	8.6+6.5+7.0	0.75 +0.35X2	0.7 +0.6X2
				400						79	8.2+6.2+6.7		
				415						76	7.9+6.0+6.4		
RX(Y)Q22PY1	RX(Y)Q10PY1	RX(Y)Q12PY1	50	380	342	456	44.3	63.0	50	92	4.7+7.2+6.5+7.0	0.75 +0.35X2	0.9 +0.6X2
				400						88	4.5+6.8+6.2+6.7		
				415						84	4.3+6.6+6.0+6.4		
RX(Y)Q24PY1	RX(Y)Q8PY1	RX(Y)Q16PY1	50	380	342	456	50.0	63.0	60	93	8.6+6.4+8.0×2	0.75 +0.35X2	0.7 +0.6X2
				400						89	8.2+6.1+7.6×2		
				415						86	7.9+5.9+7.3×2		
RX(Y)Q26PY1	RX(Y)Q8PY1	RX(Y)Q18PY1	50	380	342	456	51.0	64.8	60	93	8.6+9.4+8.3×2	0.75 +0.75X2	0.7 +0.7X2
				400						89	8.2+9.0+7.8×2		
				415						86	7.9+8.6+7.6×2		
RX(Y)Q28PY1	RX(Y)Q10PY1	RX(Y)Q18PY1	50	380	342	456	54.1	79.8	60	103	4.7+7.2+9.4+8.3×2	0.75 +0.75X2	0.9 +0.7X2
				400						98	4.5+6.8+9.0+7.8×2		
				415						94	4.3+6.6+8.6+7.6×2		
RX(Y)Q30PY1	RX(Y)Q12PY1	RX(Y)Q18PY1	50	380	342	456	55.2	79.8	70	103	6.5+7.0+9.4+8.3×2	0.35X2 +0.75X2	0.6X2 +0.7X2
				400						98	6.2+6.7+9.0+7.8×2		
				415						95	6.0+6.4+8.6+7.6×2		
RX(Y)Q32PY1	RX(Y)Q16PY1	RX(Y)Q16PY1	50	380	342	456	63.0	92.8	70	115	(6.4×8.0×2)×2	(0.35X2)X2	(0.6X2)X2
				400						109	(6.1×7.6×2)×2		
				415						105	(5.9×7.3×2)×2		

Symbols:
MCA :Min. Circuit Amps. (A)
TOCA :Total Over-current Amps. (A)
MFA :Max. Fuse Amps. (A)
MSC :Max. Starting current
RLA :Rated Load Amps. (A)
OFM :Outdoor Fan Motor
FLA :Full Load Amps. (A)
kW :Rated Motor Output(kW)

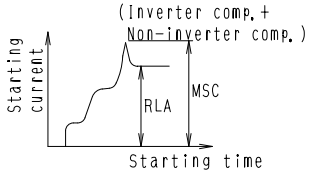

The relationship between the starting time and the starting current.

Notes:
1. RLA is based on the following conditions.
   Indoor temp. 27℃ DB/19.0℃ WB
   Outdoor temp. 35℃ DB
2. TOCA means the total value of each OC set.
3. MSC means the Max. current during the starting of compressor.
4. Voltage range
   Units are suitable for use on electrical systems where voltage supplied to unit terminal is not below or above listed range limits.
5. Maximum allowable voltage variation between phases is 2%.
6. Select wire size based on the larger value of MCA or TOCA.
7. MFA is used to select the circuit breaker and the ground fault circuit interrupter (earth leakage circuit breaker).

3D052400B

RXQ34, 36, 38, 40, 42, 44, 46PY1

Model Name				Units				Power supply			Comp.		OFM	
Combination Unit	Independent Unit			Hz	Volts	Min.	Max.	MCA	TOCA	MFA	MSC	RLA	KW	FLA
RX(Y)Q34PY1	RX(Y)Q16PY1	RX(Y)Q18PY1		50	380	342	456	64.0	94.7	80	115	6.4+8.0X2+9.4+8.3X2	0.35x2 +0.75x2	0.6x2 +0.7x2
					400						109	6.1+7.6X2+9.0+7.8X2		
					415						105	5.9+7.3X2+8.6+7.6X2		
RX(Y)Q36PY1	RX(Y)Q18PY1	RX(Y)Q18PY1		50	380	342	456	65.0	96.6	80	115	(9.4+8.3X2)X2	(0.75x2)x2	(0.7x2)x2
					400						109	(9.0+7.8X2)X2		
					415						105	(8.6+7.6X2)X2		
RX(Y)Q38PY1	RX(Y)Q8PY1	RX(Y)Q12PY1	RX(Y)Q18PY1	50	380	342	456	73.7	96.3	90	107	8.6+6.5+7.0+9.4+8.3X2	0.75 +0.35x2 +0.75x2	0.7 +0.6x2 +0.7x2
					400						102	8.2+6.2+6.7+9.0+7.8X2		
					415						98	7.9+6.0+6.4+8.6+7.6X2		
RX(Y)Q40PY1	RX(Y)Q8PY1	RX(Y)Q16PY1	RX(Y)Q16PY1	50	380	342	456	81.5	109.4	90	119	8.6+(6.4+8.0X2)X2	0.75 +(0.35x2)x2	0.7 +(0.6x2)x2
					400						113	8.2+(6.1+7.6X2)X2		
					415						109	7.9+(5.9+7.3X2)X2		
RX(Y)Q42PY1	RX(Y)Q8PY1	RX(Y)Q16PY1	RX(Y)Q18PY1	50	380	342	456	82.5	111.2	100	119	8.6+6.4+8.0X2+9.4+8.3X2	0.75 +0.35x2 +0.75x2	0.7 +0.6x2 +0.7x2
					400						113	8.2+6.1+7.6X2+9.0+7.8X2		
					415						109	7.9+5.9+7.3X2+8.6+7.6X2		
RX(Y)Q44PY1	RX(Y)Q8PY1	RX(Y)Q18PY1	RX(Y)Q18PY1	50	380	342	456	83.5	113.1	100	119	8.6+(9.4+8.3X2)X2	0.75 +(0.75x2)x2	0.7 +(0.7x2)x2
					400						113	8.2+(9.0+7.8X2)X2		
					415						109	7.9+(8.6+7.6X2)X2		
RX(Y)Q46PY1	RX(Y)Q10PY1	RX(Y)Q18PY1	RX(Y)Q18PY1	50	380	342	456	86.6	128.1	100	128	4.7+7.2+(9.4+8.3X2)X2	0.75 +(0.75x2)x2	0.9 +(0.7x2)x2
					400						122	4.5+6.8+(9.0+7.8X2)X2		
					415						118	4.3+6.6+(8.6+7.6X2)X2		

Symbols:
MCA :Min. Circuit Amps. (A)
TOCA :Total Over-current Amps. (A)
MFA :Max. Fuse Amps. (A)
MSC :Max. Starting current
RLA :Rated Load Amps. (A)
OFM :Outdoor Fan Motor
FLA :Full Load Amps. (A)
kW :Rated Motor Output(kW)

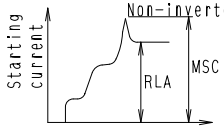

The relationship between the starting time and the starting current.

Notes:
1. RLA is based on the following conditions.
   Indoor temp. 27℃ DB/19.0℃ WB
   Outdoor temp. 35℃ DB
2. TOCA means the total value of each OC set.
3. MSC means the Max. current during the starting of compressor.
4. Voltage range
   Units are suitable for use on electrical systems where voltage supplied to unit terminal is not below or above listed range limits.
5. Maximum allowable voltage variation between phases is 2%.
6. Select wire size based on the larger value of MCA or TOCA.
7. MFA is used to select the circuit breaker and the ground fault circuit interrupter (earth leakage circuit breaker).

3D052401B

RXQ48, 50, 52, 54PY1

Model Name				Units				Power supply			Comp.		OFM	
Combination Unit	Independent Unit			Hz	Volts	Min.	Max.	MCA	TOCA	MFA	MSC	RLA	KW	FLA
RX(Y)Q48PY1	RX(Y)Q12PY1	RX(Y)Q18PY1	RX(Y)Q18PY1	50	380	342	456	87.7	128.0	100	129	6.5+7.0+(9.4+8.3X2)X2	0.35x2 +(0.75x2)x2	0.6x2 +(0.7x2)x2
					400						122	6.2+6.7+(9.0+7.8X2)X2		
					415						118	6.0+6.4+(8.6+7.6X2)X2		
RX(Y)Q50PY1	RX(Y)Q14PY1	RX(Y)Q18PY1	RX(Y)Q18PY1	50	380	342	456	96.5	143.0	110	139	3.6+7.9X2+(9.4+8.3X2)X2	0.35x2 +(0.75x2)x2	0.6x2 +(0.7x2)x2
					400						132	3.4+7.5X2+(9.0+7.8X2)X2		
					415						127	3.3+7.3X2+(8.6+7.6X2)X2		
RX(Y)Q52PY1	RX(Y)Q16PY1	RX(Y)Q18PY1	RX(Y)Q18PY1	50	380	342	456	96.5	143.0	110	141	6.4+8.0X2+(9.4+8.3x2)x2	0.35x2 +(0.75x2)x2	0.6x2 +(0.7x2)x2
					400						134	6.1+7.6X2+(9.0+7.8x2)x2		
					415						129	5.9+7.3X2+(8.6+7.6x2)x2		
RX(Y)Q54PY1	RX(Y)Q18PY1	RX(Y)Q18PY1	RX(Y)Q18PY1	50	380	342	456	97.5	144.8	110	141	(9.4+8.3X2)X3	(0.75x2)x3	(0.7x2)x3
					400						134	(9.0+7.8X2)X3		
					415						129	(8.6+7.6X2)X3		

Symbols:
MCA :Min. Circuit Amps. (A)
TOCA :Total Over-current Amps. (A)
MFA :Max. Fuse Amps. (A)
MSC :Max. Starting current
RLA :Rated Load Amps. (A)
OFM :Outdoor Fan Motor
FLA :Full Load Amps. (A)
kW :Rated Motor Output(kW)

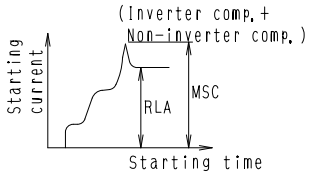

The relationship between the starting time and the starting current.

Notes:
1. RLA is based on the following conditions.
   Indoor temp. 27℃ DB/19.0℃ WB
   Outdoor temp. 35℃ DB
2. TOCA means the total value of each OC set.
3. MSC means the Max. current during the starting of compressor.
4. Voltage range
   Units are suitable for use on electrical systems where voltage supplied to unit terminal is not below or above listed range limits.
5. Maximum allowable voltage variation between phases is 2%.
6. Select wire size based on the larger value of MCA or TOCA.
7. MFA is used to select the circuit breaker and the ground fault circuit interrupter (earth leakage circuit breaker).

3D052402A

8. Capacity Tables (Cooling Only)

8.1 Cooling Capacity (RXQ-P)

1. This table indicates the situation of 50~130% combination of indoor units.
2. If connecting the indoor units over 130% of outdoor unit capacity, capacity of indoor unit will decrease.

RXQ5PY1 [50Hz]

Cooling capacity

Combination(%) (Capacity index)	Outdoor air temp. °CDB	Indoor air temp. 14.0°CWB TC kW	14.0°CWB PI kW	16.0°CWB TC kW	16.0°CWB PI kW	18.0°CWB TC kW	18.0°CWB PI kW	19.0°CWB TC kW	19.0°CWB PI kW	20.0°CWB TC kW	20.0°CWB PI kW	22.0°CWB TC kW	22.0°CWB PI kW	24.0°CWB TC kW	24.0°CWB PI kW
130 (162.5)	10	12.3	1.62	14.6	1.98	17.0	2.36	17.6	2.41	17.9	2.36	18.3	2.26	18.7	2.16
	12	12.3	1.65	14.6	2.02	17.0	2.40	17.4	2.40	17.6	2.35	18.1	2.25	18.5	2.21
	14	12.3	1.68	14.6	2.06	17.0	2.43	17.2	2.38	17.4	2.33	17.8	2.32	18.3	2.34
	16	12.3	1.71	14.6	2.10	16.7	2.42	16.9	2.41	17.2	2.42	17.6	2.44	18.1	2.46
	18	12.3	1.75	14.6	2.14	16.5	2.52	16.7	2.53	16.9	2.54	17.4	2.57	17.8	2.59
	20	12.3	1.78	14.6	2.28	16.3	2.64	16.5	2.65	16.7	2.66	17.2	2.69	17.6	2.72
	21	12.3	1.83	14.6	2.36	16.2	2.70	16.4	2.71	16.6	2.73	17.0	2.75	17.5	2.78
	23	12.3	1.96	14.6	2.53	15.9	2.82	16.2	2.84	16.4	2.85	16.8	2.88	17.3	2.91
	25	12.3	2.10	14.6	2.71	15.7	2.95	15.9	2.96	16.1	2.98	16.6	3.01	17.0	3.04
	27	12.3	2.24	14.6	2.90	15.5	3.07	15.7	3.09	15.9	3.10	16.4	3.14	16.8	3.17
	29	12.3	2.39	14.6	3.10	15.2	3.19	15.5	3.21	15.7	3.23	16.1	3.26	16.6	3.30
	31	12.3	2.55	14.6	3.28	15.0	3.32	15.2	3.34	15.5	3.36	15.9	3.39	16.3	3.43
	33	12.3	2.72	14.3	3.41	14.8	3.45	15.0	3.46	15.2	3.48	15.7	3.52	16.1	3.56
	35	12.3	2.90	14.1	3.53	14.6	3.57	14.8	3.59	15.0	3.61	15.5	3.65	15.9	3.69
	37	12.3	3.08	13.9	3.66	14.3	3.70	14.6	3.72	14.8	3.74	15.2	3.78	15.7	3.83
	39	12.3	3.28	13.7	3.78	14.1	3.83	14.3	3.85	14.6	3.87	15.0	3.92	15.4	3.96
120 (150)	10	11.3	1.48	13.5	1.81	15.7	2.15	16.8	2.33	17.6	2.42	18.0	2.33	18.4	2.24
	12	11.3	1.51	13.5	1.84	15.7	2.19	16.8	2.37	17.3	2.41	17.8	2.32	18.2	2.22
	14	11.3	1.54	13.5	1.88	15.7	2.23	16.8	2.41	17.1	2.40	17.5	2.30	17.9	2.32
	16	11.3	1.57	13.5	1.91	15.7	2.28	16.7	2.43	16.9	2.40	17.3	2.42	17.7	2.44
	18	11.3	1.60	13.5	1.95	15.7	2.36	16.5	2.51	16.7	2.52	17.1	2.55	17.5	2.57
	20	11.3	1.63	13.5	2.03	15.7	2.53	16.2	2.64	16.4	2.65	16.8	2.67	17.3	2.70
	21	11.3	1.64	13.5	2.10	15.7	2.62	16.1	2.70	16.3	2.71	16.7	2.73	17.1	2.76
	23	11.3	1.75	13.5	2.25	15.7	2.81	15.9	2.82	16.1	2.83	16.5	2.86	16.9	2.89
	25	11.3	1.88	13.5	2.41	15.5	2.93	15.7	2.94	15.9	2.96	16.3	2.99	16.7	3.01
	27	11.3	2.00	13.5	2.58	15.2	3.05	15.4	3.07	15.6	3.08	16.0	3.11	16.5	3.14
	29	11.3	2.14	13.5	2.75	15.0	3.18	15.2	3.19	15.4	3.21	15.8	3.24	16.2	3.27
	31	11.3	2.28	13.5	2.94	14.8	3.30	15.0	3.32	15.2	3.33	15.6	3.37	16.0	3.40
	33	11.3	2.42	13.5	3.13	14.5	3.42	14.8	3.44	15.0	3.46	15.4	3.49	15.8	3.53
	35	11.3	2.58	13.5	3.34	14.3	3.55	14.5	3.57	14.7	3.59	15.1	3.62	15.5	3.66
	37	11.3	2.75	13.5	3.56	14.1	3.67	14.3	3.69	14.5	3.71	14.9	3.75	15.3	3.79
	39	11.3	2.92	13.5	3.76	13.9	3.80	14.1	3.82	14.3	3.84	14.7	3.88	15.1	3.93
110 (137.5)	10	10.4	1.34	12.4	1.64	14.4	1.94	15.4	2.10	16.4	2.26	17.7	2.40	18.0	2.32
	12	10.4	1.37	12.4	1.67	14.4	1.98	15.4	2.14	16.4	2.30	17.4	2.39	17.8	2.30
	14	10.4	1.39	12.4	1.70	14.4	2.02	15.4	2.18	16.4	2.35	17.2	2.38	17.6	2.30
	16	10.4	1.42	12.4	1.73	14.4	2.06	15.4	2.23	16.4	2.39	17.0	2.41	17.4	2.43
	18	10.4	1.45	12.4	1.77	14.4	2.10	15.4	2.29	16.4	2.51	16.8	2.53	17.1	2.55
	20	10.4	1.47	12.4	1.80	14.4	2.22	15.4	2.46	16.2	2.63	16.5	2.65	16.9	2.68
	21	10.4	1.49	12.4	1.86	14.4	2.30	15.4	2.55	16.0	2.69	16.4	2.72	16.8	2.74
	23	10.4	1.56	12.4	1.99	14.4	2.47	15.4	2.73	15.8	2.82	16.2	2.84	16.6	2.86
	25	10.4	1.67	12.4	2.13	14.4	2.64	15.4	2.93	15.6	2.94	16.0	2.96	16.3	2.99
	27	10.4	1.78	12.4	2.27	14.4	2.83	15.2	3.05	15.4	3.06	15.7	3.09	16.1	3.12
	29	10.4	1.89	12.4	2.42	14.4	3.02	14.9	3.17	15.1	3.19	15.5	3.21	15.9	3.24
	31	10.4	2.02	12.4	2.59	14.4	3.23	14.7	3.30	14.9	3.31	15.3	3.34	15.7	3.37
	33	10.4	2.15	12.4	2.76	14.3	3.40	14.5	3.42	14.7	3.44	15.1	3.47	15.4	3.50
	35	10.4	2.28	12.4	2.94	14.1	3.53	14.3	3.54	14.4	3.56	14.8	3.60	15.2	3.63
	37	10.4	2.43	12.4	3.13	13.8	3.65	14.0	3.67	14.2	3.69	14.6	3.72	15.0	3.76
	39	10.4	2.58	12.4	3.33	13.6	3.78	13.8	3.80	14.0	3.81	14.4	3.85	14.7	3.89
100 (125)	10	9.45	1.21	11.3	1.47	13.1	1.74	14.0	1.88	14.9	2.02	16.7	2.31	17.7	2.39
	12	9.45	1.23	11.3	1.50	13.1	1.78	14.0	1.92	14.9	2.06	16.7	2.36	17.5	2.38
	14	9.45	1.26	11.3	1.53	13.1	1.81	14.0	1.95	14.9	2.10	16.7	2.40	17.2	2.37
	16	9.45	1.28	11.3	1.55	13.1	1.84	14.0	1.99	14.9	2.14	16.7	2.43	17.0	2.41
	18	9.45	1.30	11.3	1.58	13.1	1.88	14.0	2.03	14.9	2.19	16.4	2.51	16.8	2.53
	20	9.45	1.33	11.3	1.62	13.1	1.94	14.0	2.13	14.9	2.34	16.2	2.64	16.6	2.66
	21	9.45	1.34	11.3	1.63	13.1	2.01	14.0	2.21	14.9	2.43	16.1	2.70	16.4	2.72
	23	9.45	1.38	11.3	1.74	13.1	2.15	14.0	2.37	14.9	2.60	15.9	2.82	16.2	2.84
	25	9.45	1.47	11.3	1.86	13.1	2.30	14.0	2.54	14.9	2.79	15.6	2.94	16.0	2.97
	27	9.45	1.56	11.3	1.98	13.1	2.46	14.0	2.71	14.9	2.98	15.4	3.07	15.8	3.09
	29	9.45	1.67	11.3	2.12	13.1	2.62	14.0	2.90	14.9	3.16	15.2	3.19	15.5	3.22
	31	9.45	1.77	11.3	2.26	13.1	2.80	14.0	3.09	14.6	3.29	15.0	3.32	15.3	3.34
	33	9.45	1.89	11.3	2.40	13.1	2.99	14.0	3.30	14.4	3.41	14.7	3.44	15.1	3.47
	35	9.45	2.00	11.3	2.56	13.1	3.18	14.0	3.52	14.2	3.54	14.5	3.57	14.9	3.60
	37	9.45	2.13	11.3	2.72	13.1	3.39	13.8	3.64	13.9	3.66	14.3	3.69	14.6	3.73
	39	9.45	2.26	11.3	2.90	13.1	3.61	13.5	3.77	13.7	3.79	14.1	3.82	14.4	3.85

Cooling capacity

Combination(%) (Capacity index)	Outdoor air temp. °CDB	Indoor air temp. 14.0°CWB TC kW	14.0°CWB PI kW	16.0°CWB TC kW	16.0°CWB PI kW	18.0°CWB TC kW	18.0°CWB PI kW	19.0°CWB TC kW	19.0°CWB PI kW	20.0°CWB TC kW	20.0°CWB PI kW	22.0°CWB TC kW	22.0°CWB PI kW	24.0°CWB TC kW	24.0°CWB PI kW
90 (112.5)	10	8.50	1.09	10.1	1.31	11.8	1.55	12.6	1.67	13.4	1.79	15.1	2.05	16.7	2.31
	12	8.50	1.10	10.1	1.33	11.8	1.57	12.6	1.70	13.4	1.83	15.1	2.09	16.7	2.35
	14	8.50	1.12	10.1	1.36	11.8	1.60	12.6	1.73	13.4	1.86	15.1	2.13	16.7	2.40
	16	8.50	1.14	10.1	1.38	11.8	1.63	12.6	1.76	13.4	1.90	15.1	2.17	16.7	2.44
	18	8.50	1.16	10.1	1.41	11.8	1.67	12.6	1.80	13.4	1.94	15.1	2.21	16.4	2.51
	20	8.50	1.18	10.1	1.44	11.8	1.70	12.6	1.84	13.4	2.01	15.1	2.38	16.2	2.63
	21	8.50	1.20	10.1	1.45	11.8	1.73	12.6	1.90	13.4	2.08	15.1	2.46	16.1	2.70
	23	8.50	1.22	10.1	1.51	11.8	1.85	12.6	2.03	13.4	2.23	15.1	2.64	15.9	2.82
	25	8.50	1.28	10.1	1.61	11.8	1.98	12.6	2.18	13.4	2.38	15.1	2.83	15.6	2.94
	27	8.50	1.37	10.1	1.72	11.8	2.11	12.6	2.32	13.4	2.55	15.1	3.03	15.4	3.07
	29	8.50	1.45	10.1	1.83	11.8	2.25	12.6	2.48	13.4	2.72	14.9	3.17	15.2	3.19
	31	8.50	1.55	10.1	1.95	11.8	2.40	12.6	2.65	13.4	2.90	14.7	3.29	15.0	3.31
	33	8.50	1.64	10.1	2.07	11.8	2.56	12.6	2.82	13.4	3.10	14.4	3.41	14.7	3.44
	35	8.50	1.74	10.1	2.21	11.8	2.73	12.6	3.01	13.4	3.30	14.2	3.54	14.5	3.57
	37	8.50	1.85	10.1	2.35	11.8	2.90	12.6	3.20	13.4	3.52	14.0	3.66	14.3	3.69
	39	8.50	1.96	10.1	2.49	11.8	3.09	12.6	3.41	13.4	3.75	13.7	3.79	14.0	3.82
80 (100)	10	7.56	0.96	9.02	1.15	10.5	1.36	11.2	1.46	11.9	1.57	13.4	1.79	14.8	2.01
	12	7.56	0.98	9.02	1.17	10.5	1.38	11.2	1.49	11.9	1.60	13.4	1.82	14.8	2.05
	14	7.56	1.00	9.02	1.19	10.5	1.41	11.2	1.51	11.9	1.63	13.4	1.86	14.8	2.09
	16	7.56	1.01	9.02	1.22	10.5	1.43	11.2	1.54	11.9	1.66	13.4	1.89	14.8	2.13
	18	7.56	1.03	9.02	1.24	10.5	1.46	11.2	1.57	11.9	1.69	13.4	1.93	14.8	2.17
	20	7.56	1.05	9.02	1.26	10.5	1.49	11.2	1.60	11.9	1.72	13.4	2.00	14.8	2.33
	21	7.56	1.06	9.02	1.27	10.5	1.50	11.2	1.62	11.9	1.76	13.4	2.07	14.8	2.41
	23	7.56	1.08	9.02	1.30	10.5	1.58	11.2	1.73	11.9	1.88	13.4	2.22	14.8	2.58
	25	7.56	1.11	9.02	1.38	10.5	1.68	11.2	1.84	11.9	2.01	13.4	2.37	14.8	2.77
	27	7.56	1.18	9.02	1.47	10.5	1.79	11.2	1.97	11.9	2.15	13.4	2.54	14.8	2.96
	29	7.56	1.26	9.02	1.57	10.5	1.91	11.2	2.10	11.9	2.29	13.4	2.71	14.8	3.16
	31	7.56	1.33	9.02	1.67	10.5	2.04	11.2	2.24	11.9	2.45	13.4	2.89	14.6	3.29
	33	7.56	1.42	9.02	1.77	10.5	2.17	11.2	2.38	11.9	2.61	13.4	3.09	14.4	3.41
	35	7.56	1.50	9.02	1.88	10.5	2.31	11.2	2.54	11.9	2.78	13.4	3.29	14.2	3.53
	37	7.56	1.59	9.02	2.00	10.5	2.45	11.2	2.70	11.9	2.96	13.4	3.51	13.9	3.66
	39	7.56	1.69	9.02	2.12	10.5	2.61	11.2	2.87	11.9	3.15	13.4	3.73	13.7	3.78
70 (87.5)	10	6.61	0.85	7.89	1.01	9.16	1.17	9.80	1.26	10.4	1.35	11.7	1.54	13.0	1.73
	12	6.61	0.86	7.89	1.02	9.16	1.19	9.80	1.28	10.4	1.38	11.7	1.56	13.0	1.76
	14	6.61	0.87	7.89	1.04	9.16	1.22	9.80	1.31	10.4	1.40	11.7	1.59	13.0	1.79
	16	6.61	0.89	7.89	1.06	9.16	1.24	9.80	1.33	10.4	1.43	11.7	1.62	13.0	1.83
	18	6.61	0.90	7.89	1.08	9.16	1.26	9.80	1.36	10.4	1.45	11.7	1.66	13.0	1.86
	20	6.61	0.92	7.89	1.10	9.16	1.28	9.80	1.38	10.4	1.48	11.7	1.69	13.0	1.92
	21	6.61	0.93	7.89	1.11	9.16	1.30	9.80	1.40	10.4	1.50	11.7	1.71	13.0	1.98
	23	6.61	0.94	7.89	1.13	9.16	1.32	9.80	1.44	10.4	1.57	11.7	1.84	13.0	2.12
	25	6.61	0.96	7.89	1.17	9.16	1.41	9.80	1.54	10.4	1.67	11.7	1.96	13.0	2.27
	27	6.61	1.01	7.89	1.25	9.16	1.50	9.80	1.64	10.4	1.79	11.7	2.09	13.0	2.43
	29	6.61	1.08	7.89	1.32	9.16	1.60	9.80	1.75	10.4	1.90	11.7	2.23	13.0	2.59
	31	6.61	1.14	7.89	1.41	9.16	1.70	9.80	1.86	10.4	2.03	11.7	2.38	13.0	2.77
	33	6.61	1.21	7.89	1.49	9.16	1.81	9.80	1.98	10.4	2.16	11.7	2.54	13.0	2.95
	35	6.61	1.28	7.89	1.58	9.16	1.92	9.80	2.11	10.4	2.30	11.7	2.70	13.0	3.14
	37	6.61	1.35	7.89	1.68	9.16	2.04	9.80	2.24	10.4	2.44	11.7	2.88	13.0	3.35
	39	6.61	1.43	7.89	1.78	9.16	2.17	9.80	2.38	10.4	2.60	11.7	3.06	13.0	3.57
60 (75)	10	5.67	0.74	6.76	0.87	7.85	1.00	8.40	1.07	8.95	1.14	10.0	1.29	11.1	1.45
	12	5.67	0.75	6.76	0.88	7.85	1.02	8.40	1.09	8.95	1.16	10.0	1.32	11.1	1.48
	14	5.67	0.76	6.76	0.89	7.85	1.03	8.40	1.11	8.95	1.18	10.0	1.34	11.1	1.50
	16	5.67	0.77	6.76	0.91	7.85	1.05	8.40	1.13	8.95	1.21	10.0	1.37	11.1	1.53
	18	5.67	0.78	6.76	0.92	7.85	1.07	8.40	1.15	8.95	1.23	10.0	1.39	11.1	1.56
	20	5.67	0.79	6.76	0.94	7.85	1.09	8.40	1.17	8.95	1.25	10.0	1.42	11.1	1.59
	21	5.67	0.80	6.76	0.95	7.85	1.10	8.40	1.18	8.95	1.26	10.0	1.43	11.1	1.61
	23	5.67	0.81	6.76	0.96	7.85	1.12	8.40	1.20	8.95	1.29	10.0	1.49	11.1	1.71
	25	5.67	0.83	6.76	0.98	7.85	1.16	8.40	1.26	8.95	1.37	10.0	1.59	11.1	1.83
	27	5.67	0.86	6.76	1.04	7.85	1.24	8.40	1.35	8.95	1.46	10.0	1.70	11.1	1.95
	29	5.67	0.91	6.76	1.10	7.85	1.32	8.40	1.43	8.95	1.55	10.0	1.81	11.1	2.08
	31	5.67	0.96	6.76	1.17	7.85	1.40	8.40	1.52	8.95	1.65	10.0	1.92	11.1	2.22
	33	5.67	1.02	6.76	1.24	7.85	1.48	8.40	1.62	8.95	1.75	10.0	2.05	11.1	2.36
	35	5.67	1.08	6.76	1.31	7.85	1.58	8.40	1.72	8.95	1.86	10.0	2.18	11.1	2.51
	37	5.67	1.14	6.76	1.39	7.85	1.67	8.40	1.82	8.95	1.98	10.0	2.31	11.1	2.67
	39	5.67	1.20	6.76	1.47	7.85	1.77	8.40	1.93	8.95	2.10	10.0	2.46	11.1	2.84
50 (62.5)	10	4.72	0.63	5.63	0.73	6.54	0.84	7.00	0.89	7.46	0.95	8.37	1.07	9.28	1.19
	12	4.72	0.64	5.63	0.74	6.54	0.85	7.00	0.91	7.46	0.97	8.37	1.09	9.28	1.21
	14	4.72	0.65	5.63	0.75	6.54	0.87	7.00	0.92	7.46	0.98	8.37	1.10	9.28	1.23
	16	4.72	0.66	5.63	0.77	6.54	0.88	7.00	0.94	7.46	1.00	8.37	1.12	9.28	1.25
	18	4.72	0.67	5.63	0.78	6.54	0.89	7.00	0.95	7.46	1.02	8.37	1.14	9.28	1.28
	20	4.72	0.68	5.63	0.79	6.54	0.91	7.00	0.97	7.46	1.03	8.37	1.16	9.28	1.30
	21	4.72	0.68	5.63	0.80	6.54	0.92	7.00	0.98	7.46	1.04	8.37	1.18	9.28	1.31
	23	4.72	0.69	5.63	0.81	6.54	0.93	7.00	1.00	7.46	1.06	8.37	1.20	9.28	1.34
	25	4.72	0.70	5.63	0.82	6.54	0.95	7.00	1.02	7.46	1.09	8.37	1.26	9.28	1.43
	27	4.72	0.71	5.63	0.85	6.54	1.00	7.00	1.08	7.46	1.16	8.37	1.34	9.28	1.53
	29	4.72	0.76	5.63	0.90	6.54	1.06	7.00	1.15	7.46	1.24	8.37	1.42	9.28	1.63
	31	4.72	0.80	5.63	0.96	6.54	1.13	7.00	1.22	7.46	1.31	8.37	1.51	9.28	1.73
	33	4.72	0.84	5.63	1.01	6.54	1.19	7.00	1.29	7.46	1.39	8.37	1.61	9.28	1.84
	35	4.72	0.89	5.63	1.07	6.54	1.26	7.00	1.37	7.46	1.48	8.37	1.71	9.28	1.95
	37	4.72	0.94	5.63	1.13	6.54	1.34	7.00	1.45	7.46	1.57	8.37	1.81	9.28	2.08
	39	4.72	0.99	5.63	1.19	6.54	1.42	7.00	1.53	7.46	1.66	8.37	1.92	9.28	2.20

TC Total capacity ; kW
PI Power Input ; kW(Comp.+Outdoor fan motor)
Note1: The above table shows the average value of conditions which may occur.

RXQ8PY1 [50Hz]

Cooling capacity

Combination(%) (Capacity index)	Outdoor air temp. °CDB	Indoor air temp. 14.0°CWB TC kW	14.0°CWB PI kW	16.0°CWB TC kW	16.0°CWB PI kW	18.0°CWB TC kW	18.0°CWB PI kW	19.0°CWB TC kW	19.0°CWB PI kW	20.0°CWB TC kW	20.0°CWB PI kW	22.0°CWB TC kW	22.0°CWB PI kW	24.0°CWB TC kW	24.0°CWB PI kW
130 (260)	10	19.7	2.41	23.4	2.95	27.2	3.51	28.2	3.59	28.6	3.51	29.3	3.37	30.0	3.21
	12	19.7	2.46	23.4	3.01	27.2	3.58	27.8	3.57	28.2	3.49	28.9	3.34	29.6	3.29
	14	19.7	2.50	23.4	3.07	27.1	3.62	27.5	3.55	27.8	3.47	28.5	3.45	29.3	3.48
	16	19.7	2.55	23.4	3.13	26.8	3.61	27.1	3.58	27.5	3.60	28.2	3.63	28.9	3.67
	18	19.7	2.60	23.4	3.19	26.4	3.75	26.8	3.76	27.1	3.78	27.8	3.82	28.5	3.86
	20	19.7	2.65	23.4	3.40	26.0	3.93	26.4	3.95	26.7	3.97	27.5	4.01	28.2	4.04
	21	19.7	2.73	23.4	3.52	25.9	4.02	26.2	4.04	26.6	4.06	27.3	4.10	28.0	4.14
	23	19.7	2.92	23.4	3.77	25.5	4.20	25.8	4.22	26.2	4.24	26.9	4.29	27.6	4.33
	25	19.7	3.12	23.4	4.04	25.1	4.39	25.5	4.41	25.8	4.43	26.5	4.48	27.3	4.52
	27	19.7	3.34	23.4	4.32	24.8	4.57	25.1	4.59	25.5	4.62	26.2	4.67	26.9	4.72
	29	19.7	3.56	23.4	4.62	24.4	4.76	24.8	4.78	25.1	4.81	25.8	4.86	26.5	4.91
	31	19.7	3.80	23.3	4.89	24.0	4.94	24.4	4.97	24.7	5.00	25.4	5.05	26.2	5.10
	33	19.7	4.05	23.0	5.07	23.7	5.13	24.0	5.16	24.4	5.19	25.1	5.24	25.8	5.30
	35	19.7	4.31	22.6	5.26	23.3	5.32	23.7	5.35	24.0	5.38	24.7	5.44	25.4	5.50
	37	19.7	4.59	22.2	5.44	22.9	5.51	23.3	5.54	23.6	5.57	24.4	5.63	25.1	5.70
	39	19.7	4.89	21.9	5.63	22.6	5.70	22.9	5.73	23.3	5.76	24.0	5.83	24.7	5.90
120 (240)	10	18.1	2.20	21.6	2.69	25.1	3.20	26.9	3.46	28.1	3.61	28.8	3.47	29.4	3.33
	12	18.1	2.24	21.6	2.74	25.1	3.26	26.9	3.53	27.8	3.59	28.4	3.45	29.1	3.31
	14	18.1	2.29	21.6	2.80	25.1	3.33	26.9	3.59	27.4	3.57	28.0	3.43	28.7	3.45
	16	18.1	2.33	21.6	2.85	25.1	3.39	26.7	3.62	27.0	3.58	27.7	3.61	28.3	3.64
	18	18.1	2.38	21.6	2.91	25.1	3.51	26.3	3.74	26.7	3.76	27.3	3.79	28.0	3.83
	20	18.1	2.42	21.6	3.02	25.1	3.77	26.0	3.92	26.3	3.94	27.0	3.98	27.6	4.01
	21	18.1	2.45	21.6	3.13	25.1	3.91	25.8	4.02	26.1	4.03	26.8	4.07	27.4	4.11
	23	18.1	2.61	21.6	3.35	25.1	4.18	25.4	4.20	25.8	4.22	26.4	4.26	27.1	4.30
	25	18.1	2.79	21.6	3.59	24.7	4.36	25.1	4.38	25.4	4.40	26.0	4.44	26.7	4.49
	27	18.1	2.98	21.6	3.84	24.4	4.54	24.7	4.57	25.0	4.59	25.7	4.63	26.3	4.68
	29	18.1	3.18	21.6	4.10	24.0	4.73	24.3	4.75	24.7	4.77	25.3	4.82	26.0	4.87
	31	18.1	3.39	21.6	4.37	23.6	4.91	24.0	4.94	24.3	4.96	24.9	5.01	25.6	5.06
	33	18.1	3.61	21.6	4.66	23.3	5.10	23.6	5.12	23.9	5.15	24.6	5.20	25.2	5.26
	35	18.1	3.84	21.6	4.97	22.9	5.28	23.2	5.31	23.6	5.34	24.2	5.39	24.9	5.45
	37	18.1	4.09	21.6	5.30	22.5	5.47	22.9	5.50	23.2	5.53	23.9	5.59	24.5	5.65
	39	18.1	4.35	21.5	5.60	22.2	5.66	22.5	5.69	22.8	5.72	23.5	5.78	24.1	5.84
110 (220)	10	16.6	2.00	19.8	2.44	23.0	2.90	24.6	3.13	26.2	3.37	28.3	3.57	28.9	3.45
	12	16.6	2.04	19.8	2.48	23.0	2.95	24.6	3.19	26.2	3.43	27.9	3.56	28.5	3.43
	14	16.6	2.07	19.8	2.53	23.0	3.01	24.6	3.25	26.2	3.50	27.5	3.54	28.1	3.43
	16	16.6	2.11	19.8	2.58	23.0	3.06	24.6	3.31	26.2	3.56	27.2	3.58	27.8	3.61
	18	16.6	2.15	19.8	2.63	23.0	3.13	24.6	3.40	26.2	3.74	26.8	3.77	27.4	3.80
	20	16.6	2.20	19.8	2.68	23.0	3.31	24.6	3.66	25.9	3.92	26.5	3.95	27.1	3.98
	21	16.6	2.22	19.8	2.76	23.0	3.43	24.6	3.79	25.7	4.01	26.3	4.04	26.9	4.08
	23	16.6	2.32	19.8	2.96	23.0	3.68	24.6	4.07	25.3	4.19	25.9	4.23	26.5	4.26
	25	16.6	2.48	19.8	3.16	23.0	3.94	24.6	4.35	24.9	4.37	25.5	4.41	26.1	4.45
	27	16.6	2.64	19.8	3.38	23.0	4.21	24.3	4.54	24.6	4.56	25.2	4.60	25.8	4.64
	29	16.6	2.82	19.8	3.61	23.0	4.50	23.9	4.72	24.2	4.74	24.8	4.79	25.4	4.83
	31	16.6	3.00	19.8	3.85	23.0	4.80	23.5	4.91	23.8	4.93	24.4	4.97	25.0	5.02
	33	16.6	3.19	19.8	4.10	22.9	5.07	23.2	5.09	23.5	5.11	24.1	5.16	24.7	5.21
	35	16.6	3.40	19.8	4.37	22.5	5.25	22.8	5.28	23.1	5.30	23.7	5.35	24.3	5.40
	37	16.6	3.61	19.8	4.65	22.2	5.44	22.5	5.46	22.8	5.49	23.4	5.54	24.0	5.60
	39	16.6	3.84	19.8	4.96	21.8	5.62	22.1	5.65	22.4	5.68	23.0	5.73	23.6	5.79
100 (200)	10	15.1	1.81	18.0	2.19	20.9	2.59	22.4	2.80	23.9	3.01	26.8	3.44	28.3	3.57
	12	15.1	1.84	18.0	2.23	20.9	2.64	22.4	2.86	23.9	3.07	26.8	3.51	28.0	3.55
	14	15.1	1.87	18.0	2.27	20.9	2.69	22.4	2.91	23.9	3.13	26.8	3.58	27.6	3.53
	16	15.1	1.90	18.0	2.31	20.9	2.75	22.4	2.97	23.9	3.19	26.7	3.62	27.2	3.59
	18	15.1	1.94	18.0	2.36	20.9	2.80	22.4	3.03	23.9	3.25	26.3	3.74	26.9	3.77
	20	15.1	1.98	18.0	2.41	20.9	2.88	22.4	3.18	23.9	3.49	26.0	3.92	26.5	3.95
	21	15.1	2.00	18.0	2.43	20.9	2.99	22.4	3.29	23.9	3.61	25.8	4.01	26.3	4.05
	23	15.1	2.05	18.0	2.59	20.9	3.20	22.4	3.53	23.9	3.87	25.4	4.20	25.9	4.23
	25	15.1	2.19	18.0	2.77	20.9	3.42	22.4	3.78	23.9	4.15	25.0	4.38	25.6	4.42
	27	15.1	2.33	18.0	2.95	20.9	3.66	22.4	4.04	23.9	4.44	24.7	4.56	25.2	4.60
	29	15.1	2.48	18.0	3.15	20.9	3.91	22.4	4.31	23.8	4.71	24.3	4.75	24.9	4.79
	31	15.1	2.64	18.0	3.36	20.9	4.17	22.4	4.61	23.4	4.89	23.9	4.94	24.5	4.98
	33	15.1	2.81	18.0	3.58	20.9	4.44	22.4	4.91	23.0	5.08	23.6	5.12	24.1	5.17
	35	15.1	2.98	18.0	3.81	20.9	4.74	22.4	5.24	22.7	5.26	23.2	5.31	23.8	5.36
	37	15.1	3.17	18.0	4.05	20.9	5.05	22.0	5.42	22.3	5.45	22.9	5.50	23.4	5.55
	39	15.1	3.37	18.0	4.31	20.9	5.38	21.7	5.61	21.9	5.64	22.5	5.69	23.0	5.74

Cooling capacity

Combination(%) (Capacity index)	Outdoor air temp. °CDB	Indoor air temp. 14.0°CWB TC kW	14.0°CWB PI kW	16.0°CWB TC kW	16.0°CWB PI kW	18.0°CWB TC kW	18.0°CWB PI kW	19.0°CWB TC kW	19.0°CWB PI kW	20.0°CWB TC kW	20.0°CWB PI kW	22.0°CWB TC kW	22.0°CWB PI kW	24.0°CWB TC kW	24.0°CWB PI kW
90 (180)	10	13.6	1.62	16.2	1.95	18.8	2.30	20.2	2.48	21.5	2.67	24.1	3.05	26.7	3.44
	12	13.6	1.64	16.2	1.98	18.8	2.34	20.2	2.53	21.5	2.72	24.1	3.11	26.7	3.50
	14	13.6	1.67	16.2	2.02	18.8	2.39	20.2	2.58	21.5	2.77	24.1	3.17	26.7	3.57
	16	13.6	1.70	16.2	2.06	18.8	2.43	20.2	2.63	21.5	2.82	24.1	3.23	26.7	3.63
	18	13.6	1.73	16.2	2.10	18.8	2.48	20.2	2.68	21.5	2.88	24.1	3.29	26.3	3.74
	20	13.6	1.76	16.2	2.14	18.8	2.53	20.2	2.73	21.5	2.99	24.1	3.54	25.9	3.92
	21	13.6	1.78	16.2	2.16	18.8	2.57	20.2	2.83	21.5	3.09	24.1	3.67	25.8	4.01
	23	13.6	1.81	16.2	2.25	18.8	2.75	20.2	3.03	21.5	3.32	24.1	3.93	25.4	4.20
	25	13.6	1.91	16.2	2.40	18.8	2.94	20.2	3.24	21.5	3.55	24.1	4.21	25.0	4.38
	27	13.6	2.03	16.2	2.56	18.8	3.14	20.2	3.46	21.5	3.79	24.1	4.50	24.7	4.56
	29	13.6	2.16	16.2	2.73	18.8	3.35	20.2	3.69	21.5	4.05	23.8	4.71	24.3	4.75
	31	13.6	2.30	16.2	2.90	18.8	3.58	20.2	3.94	21.5	4.32	23.4	4.90	23.9	4.93
	33	13.6	2.44	16.2	3.09	18.8	3.81	20.2	4.20	21.5	4.61	23.1	5.08	23.6	5.12
	35	13.6	2.60	16.2	3.28	18.8	4.06	20.2	4.48	21.5	4.92	22.7	5.27	23.2	5.31
	37	13.6	2.75	16.2	3.49	18.8	4.32	20.2	4.77	21.5	5.24	22.4	5.45	22.8	5.50
	39	13.6	2.92	16.2	3.71	18.8	4.60	20.2	5.08	21.5	5.58	22.0	5.64	22.5	5.69
80 (160)	10	12.1	1.43	14.4	1.72	16.8	2.02	17.9	2.17	19.1	2.33	21.4	2.66	23.7	3.00
	12	12.1	1.46	14.4	1.75	16.8	2.05	17.9	2.21	19.1	2.38	21.4	2.71	23.7	3.05
	14	12.1	1.48	14.4	1.78	16.8	2.09	17.9	2.26	19.1	2.42	21.4	2.76	23.7	3.11
	16	12.1	1.51	14.4	1.81	16.8	2.13	17.9	2.30	19.1	2.47	21.4	2.82	23.7	3.17
	18	12.1	1.53	14.4	1.84	16.8	2.17	17.9	2.34	19.1	2.52	21.4	2.87	23.7	3.24
	20	12.1	1.56	14.4	1.88	16.8	2.21	17.9	2.39	19.1	2.57	21.4	2.98	23.7	3.46
	21	12.1	1.57	14.4	1.90	16.8	2.24	17.9	2.41	19.1	2.62	21.4	3.08	23.7	3.59
	23	12.1	1.60	14.4	1.93	16.8	2.34	17.9	2.57	19.1	2.80	21.4	3.30	23.7	3.85
	25	12.1	1.66	14.4	2.06	16.8	2.50	17.9	2.74	19.1	3.00	21.4	3.53	23.7	4.12
	27	12.1	1.76	14.4	2.19	16.8	2.67	17.9	2.93	19.1	3.20	21.4	3.78	23.7	4.41
	29	12.1	1.87	14.4	2.33	16.8	2.85	17.9	3.12	19.1	3.41	21.4	4.04	23.7	4.71
	31	12.1	1.99	14.4	2.48	16.8	3.03	17.9	3.33	19.1	3.64	21.4	4.31	23.4	4.89
	33	12.1	2.11	14.4	2.64	16.8	3.23	17.9	3.55	19.1	3.88	21.4	4.59	23.0	5.08
	35	12.1	2.24	14.4	2.80	16.8	3.43	17.9	3.77	19.1	4.13	21.4	4.90	22.7	5.26
	37	12.1	2.37	14.4	2.98	16.8	3.65	17.9	4.02	19.1	4.40	21.4	5.22	22.3	5.45
	39	12.1	2.51	14.4	3.16	16.8	3.88	17.9	4.27	19.1	4.68	21.4	5.56	21.9	5.63
70 (140)	10	10.6	1.26	12.6	1.50	14.7	1.75	15.7	1.88	16.7	2.01	18.7	2.29	20.8	2.57
	12	10.6	1.28	12.6	1.52	14.7	1.78	15.7	1.91	16.7	2.05	18.7	2.33	20.8	2.62
	14	10.6	1.30	12.6	1.55	14.7	1.81	15.7	1.95	16.7	2.08	18.7	2.37	20.8	2.67
	16	10.6	1.32	12.6	1.57	14.7	1.84	15.7	1.98	16.7	2.12	18.7	2.42	20.8	2.72
	18	10.6	1.34	12.6	1.60	14.7	1.88	15.7	2.02	16.7	2.16	18.7	2.46	20.8	2.77
	20	10.6	1.37	12.6	1.63	14.7	1.91	15.7	2.06	16.7	2.21	18.7	2.51	20.8	2.85
	21	10.6	1.38	12.6	1.65	14.7	1.93	15.7	2.08	16.7	2.23	18.7	2.55	20.8	2.95
	23	10.6	1.40	12.6	1.68	14.7	1.97	15.7	2.15	16.7	2.33	18.7	2.73	20.8	3.16
	25	10.6	1.43	12.6	1.74	14.7	2.10	15.7	2.29	16.7	2.49	18.7	2.92	20.8	3.38
	27	10.6	1.51	12.6	1.85	14.7	2.24	15.7	2.44	16.7	2.66	18.7	3.12	20.8	3.62
	29	10.6	1.60	12.6	1.97	14.7	2.38	15.7	2.60	16.7	2.83	18.7	3.33	20.8	3.86
	31	10.6	1.70	12.6	2.09	14.7	2.53	15.7	2.77	16.7	3.02	18.7	3.55	20.8	4.12
	33	10.6	1.80	12.6	2.22	14.7	2.69	15.7	2.95	16.7	3.21	18.7	3.78	20.8	4.39
	35	10.6	1.90	12.6	2.36	14.7	2.86	15.7	3.13	16.7	3.42	18.7	4.02	20.8	4.68
	37	10.6	2.02	12.6	2.50	14.7	3.04	15.7	3.33	16.7	3.63	18.7	4.28	20.8	4.99
	39	10.6	2.13	12.6	2.65	14.7	3.23	15.7	3.54	16.7	3.86	18.7	4.56	20.8	5.31
60 (120)	10	9.1	1.10	10.8	1.29	12.6	1.49	13.4	1.60	14.3	1.70	16.1	1.93	17.8	2.16
	12	9.1	1.11	10.8	1.31	12.6	1.51	13.4	1.62	14.3	1.73	16.1	1.96	17.8	2.20
	14	9.1	1.13	10.8	1.33	12.6	1.54	13.4	1.65	14.3	1.76	16.1	2.00	17.8	2.24
	16	9.1	1.15	10.8	1.35	12.6	1.57	13.4	1.68	14.3	1.80	16.1	2.03	17.8	2.28
	18	9.1	1.16	10.8	1.37	12.6	1.59	13.4	1.71	14.3	1.83	16.1	2.07	17.8	2.33
	20	9.1	1.18	10.8	1.40	12.6	1.62	13.4	1.74	14.3	1.86	16.1	2.11	17.8	2.37
	21	9.1	1.19	10.8	1.41	12.6	1.64	13.4	1.76	14.3	1.88	16.1	2.13	17.8	2.40
	23	9.1	1.21	10.8	1.43	12.6	1.67	13.4	1.79	14.3	1.92	16.1	2.22	17.8	2.55
	25	9.1	1.23	10.8	1.46	12.6	1.73	13.4	1.88	14.3	2.04	16.1	2.37	17.8	2.72
	27	9.1	1.28	10.8	1.55	12.6	1.84	13.4	2.00	14.3	2.17	16.1	2.52	17.8	2.90
	29	9.1	1.35	10.8	1.64	12.6	1.96	13.4	2.13	14.3	2.31	16.1	2.69	17.8	3.10
	31	9.1	1.43	10.8	1.74	12.6	2.08	13.4	2.27	14.3	2.46	16.1	2.86	17.8	3.30
	33	9.1	1.51	10.8	1.85	12.6	2.21	13.4	2.41	14.3	2.61	16.1	3.05	17.8	3.52
	35	9.1	1.60	10.8	1.95	12.6	2.35	13.4	2.55	14.3	2.77	16.1	3.24	17.8	3.74
	37	9.1	1.69	10.8	2.07	12.6	2.49	13.4	2.71	14.3	2.94	16.1	3.44	17.8	3.98
	39	9.1	1.79	10.8	2.19	12.6	2.64	13.4	2.88	14.3	3.13	16.1	3.66	17.8	4.23
50 (100)	10	7.56	0.94	9.0	1.09	10.5	1.25	11.2	1.33	11.9	1.42	13.4	1.59	14.8	1.77
	12	7.56	0.96	9.0	1.11	10.5	1.27	11.2	1.35	11.9	1.44	13.4	1.62	14.8	1.80
	14	7.56	0.97	9.0	1.12	10.5	1.29	11.2	1.37	11.9	1.46	13.4	1.64	14.8	1.83
	16	7.56	0.98	9.0	1.14	10.5	1.31	11.2	1.40	11.9	1.49	13.4	1.67	14.8	1.87
	18	7.56	0.99	9.0	1.16	10.5	1.33	11.2	1.42	11.9	1.51	13.4	1.70	14.8	1.90
	20	7.56	1.01	9.0	1.18	10.5	1.35	11.2	1.44	11.9	1.54	13.4	1.73	14.8	1.94
	21	7.56	1.02	9.0	1.18	10.5	1.36	11.2	1.46	11.9	1.55	13.4	1.75	14.8	1.96
	23	7.56	1.03	9.0	1.20	10.5	1.39	11.2	1.48	11.9	1.58	13.4	1.78	14.8	2.00
	25	7.56	1.05	9.0	1.22	10.5	1.41	11.2	1.51	11.9	1.63	13.4	1.87	14.8	2.13
	27	7.56	1.06	9.0	1.27	10.5	1.49	11.2	1.61	11.9	1.73	13.4	1.99	14.8	2.27
	29	7.56	1.13	9.0	1.34	10.5	1.58	11.2	1.71	11.9	1.84	13.4	2.12	14.8	2.42
	31	7.56	1.19	9.0	1.42	10.5	1.68	11.2	1.81	11.9	1.95	13.4	2.25	14.8	2.58
	33	7.56	1.26	9.0	1.50	10.5	1.78	11.2	1.92	11.9	2.07	13.4	2.39	14.8	2.74
	35	7.56	1.33	9.0	1.59	10.5	1.88	11.2	2.04	11.9	2.20	13.4	2.54	14.8	2.91
	37	7.56	1.40	9.0	1.68	10.5	1.99	11.2	2.16	11.9	2.33	13.4	2.70	14.8	3.09
	39	7.56	1.47	9.0	1.78	10.5	2.11	11.2	2.28	11.9	2.47	13.4	2.86	14.8	3.28

TC Total capacity ; kW
PI Power Input ; kW(Comp.+Outdoor fan motor)
Note1: The above table shows the average value of conditions which may occur.

RXQ10PY1 [50Hz]

Cooling capacity

Combination(%) (Capacity index)	Outdoor air temp. °CDB	Indoor air temp. 14.0°CWB TC kW	14.0°CWB PI kW	16.0°CWB TC kW	16.0°CWB PI kW	18.0°CWB TC kW	18.0°CWB PI kW	19.0°CWB TC kW	19.0°CWB PI kW	20.0°CWB TC kW	20.0°CWB PI kW	22.0°CWB TC kW	22.0°CWB PI kW	24.0°CWB TC kW	24.0°CWB PI kW
130 (325)	10	24.6	3.64	29.3	4.45	34.0	5.30	35.3	5.41	35.7	5.30	36.6	5.07	37.5	4.85
	12	24.6	3.70	29.3	4.54	34.0	5.40	34.8	5.38	35.3	5.27	36.1	5.04	37.0	4.96
	14	24.6	3.77	29.3	4.62	33.9	5.46	34.4	5.35	34.8	5.24	35.7	5.20	36.6	5.24
	16	24.6	3.85	29.3	4.71	33.5	5.44	33.9	5.40	34.3	5.42	35.2	5.48	36.1	5.53
	18	24.6	3.92	29.3	4.81	33.0	5.65	33.4	5.67	33.9	5.70	34.8	5.76	35.7	5.81
	20	24.6	4.00	29.3	5.12	32.5	5.92	33.0	5.95	33.4	5.98	34.3	6.04	35.2	6.10
	21	24.6	4.11	29.3	5.30	32.3	6.06	32.8	6.09	33.2	6.12	34.1	6.18	35.0	6.24
	23	24.6	4.40	29.3	5.69	31.9	6.34	32.3	6.37	32.7	6.40	33.6	6.46	34.5	6.53
	25	24.6	4.71	29.3	6.09	31.4	6.61	31.8	6.65	32.3	6.68	33.2	6.75	34.1	6.82
	27	24.6	5.03	29.3	6.51	31.0	6.89	31.4	6.93	31.8	6.96	32.7	7.04	33.6	7.11
	29	24.6	5.37	29.3	6.96	30.5	7.17	30.9	7.21	31.4	7.25	32.3	7.32	33.2	7.40
	31	24.6	5.73	29.2	7.37	30.0	7.45	30.5	7.49	30.9	7.53	31.8	7.61	32.7	7.69
	33	24.6	6.10	28.7	7.65	29.6	7.73	30.0	7.78	30.5	7.82	31.4	7.90	32.2	7.99
	35	24.6	6.50	28.2	7.92	29.1	8.02	29.6	8.06	30.0	8.11	30.9	8.20	31.8	8.29
	37	24.6	6.92	27.8	8.20	28.7	8.30	29.1	8.35	29.6	8.40	30.4	8.49	31.3	8.59
	39	24.6	7.37	27.3	8.49	28.2	8.59	28.7	8.64	29.1	8.69	30.0	8.79	30.9	8.89
120 (300)	10	22.7	3.32	27.0	4.06	31.4	4.83	33.6	5.22	35.2	5.44	36.0	5.23	36.8	5.03
	12	22.7	3.38	27.0	4.14	31.4	4.92	33.6	5.32	34.7	5.41	35.5	5.20	36.3	4.99
	14	22.7	3.45	27.0	4.21	31.4	5.01	33.6	5.42	34.2	5.38	35.1	5.17	35.9	5.21
	16	22.7	3.51	27.0	4.30	31.4	5.11	33.4	5.46	33.8	5.39	34.6	5.44	35.4	5.49
	18	22.7	3.58	27.0	4.38	31.4	5.29	32.9	5.64	33.3	5.67	34.1	5.72	35.0	5.77
	20	22.7	3.65	27.0	4.56	31.4	5.68	32.5	5.92	32.9	5.94	33.7	6.00	34.5	6.05
	21	22.7	3.69	27.0	4.72	31.4	5.89	32.2	6.05	32.6	6.08	33.5	6.14	34.3	6.19
	23	22.7	3.94	27.0	5.05	31.4	6.30	31.8	6.33	32.2	6.36	33.0	6.42	33.8	6.48
	25	22.7	4.21	27.0	5.41	30.9	6.57	31.3	6.61	31.7	6.64	32.6	6.70	33.4	6.76
	27	22.7	4.49	27.0	5.78	30.5	6.85	30.9	6.88	31.3	6.92	32.1	6.98	32.9	7.05
	29	22.7	4.79	27.0	6.18	30.0	7.13	30.4	7.16	30.8	7.20	31.6	7.27	32.5	7.34
	31	22.7	5.11	27.0	6.59	29.5	7.41	30.0	7.44	30.4	7.48	31.2	7.56	32.0	7.63
	33	22.7	5.44	27.0	7.03	29.1	7.68	29.5	7.72	29.9	7.76	30.7	7.84	31.5	7.92
	35	22.7	5.79	27.0	7.50	28.6	7.97	29.0	8.01	29.5	8.05	30.3	8.13	31.1	8.22
	37	22.7	6.16	27.0	7.99	28.2	8.25	28.6	8.29	29.0	8.34	29.8	8.42	30.6	8.51
	39	22.7	6.56	26.9	8.44	27.7	8.53	28.1	8.58	28.5	8.62	29.4	8.72	30.2	8.81
110 (275)	10	20.8	3.02	24.8	3.68	28.8	4.36	30.8	4.72	32.8	5.08	35.3	5.39	36.1	5.20
	12	20.8	3.07	24.8	3.74	28.8	4.45	30.8	4.81	32.8	5.17	34.9	5.36	35.6	5.17
	14	20.8	3.13	24.8	3.81	28.8	4.53	30.8	4.90	32.8	5.27	34.4	5.33	35.2	5.17
	16	20.8	3.19	24.8	3.89	28.8	4.62	30.8	4.99	32.8	5.37	34.0	5.40	34.7	5.45
	18	20.8	3.25	24.8	3.96	28.8	4.71	30.8	5.13	32.8	5.63	33.5	5.68	34.3	5.73
	20	20.8	3.31	24.8	4.04	28.8	4.99	30.8	5.52	32.3	5.91	33.1	5.96	33.8	6.01
	21	20.8	3.34	24.8	4.17	28.8	5.17	30.8	5.71	32.1	6.04	32.8	6.09	33.6	6.15
	23	20.8	3.50	24.8	4.46	28.8	5.54	30.8	6.13	31.6	6.32	32.4	6.37	33.1	6.43
	25	20.8	3.74	24.8	4.77	28.8	5.93	30.8	6.57	31.2	6.59	31.9	6.65	32.7	6.71
	27	20.8	3.99	24.8	5.10	28.8	6.35	30.3	6.84	30.7	6.87	31.5	6.93	32.2	6.99
	29	20.8	4.25	24.8	5.44	28.8	6.78	29.9	7.12	30.3	7.15	31.0	7.22	31.8	7.28
	31	20.8	4.52	24.8	5.80	28.8	7.24	29.4	7.40	29.8	7.43	30.6	7.50	31.3	7.57
	33	20.8	4.82	24.8	6.18	28.6	7.64	29.0	7.67	29.4	7.71	30.1	7.78	30.9	7.86
	35	20.8	5.12	24.8	6.59	28.1	7.92	28.5	7.95	28.9	7.99	29.6	8.07	30.4	8.15
	37	20.8	5.45	24.8	7.02	27.7	8.19	28.1	8.23	28.4	8.28	29.2	8.36	29.9	8.44
	39	20.8	5.79	24.8	7.47	27.2	8.47	27.6	8.52	28.0	8.56	28.7	8.65	29.5	8.73
100 (250)	10	18.9	2.72	22.5	3.30	26.2	3.91	28.0	4.23	29.8	4.54	33.5	5.19	35.4	5.37
	12	18.9	2.77	22.5	3.36	26.2	3.98	28.0	4.30	29.8	4.63	33.5	5.29	34.9	5.35
	14	18.9	2.82	22.5	3.42	26.2	4.06	28.0	4.39	29.8	4.72	33.5	5.39	34.5	5.32
	16	18.9	2.87	22.5	3.49	26.2	4.14	28.0	4.47	29.8	4.81	33.3	5.46	34.0	5.41
	18	18.9	2.92	22.5	3.56	26.2	4.22	28.0	4.56	29.8	4.91	32.9	5.64	33.6	5.68
	20	18.9	2.98	22.5	3.63	26.2	4.35	28.0	4.79	29.8	5.26	32.4	5.91	33.1	5.96
	21	18.9	3.01	22.5	3.66	26.2	4.50	28.0	4.96	29.8	5.45	32.2	6.05	32.9	6.10
	23	18.9	3.09	22.5	3.91	26.2	4.82	28.0	5.32	29.8	5.84	31.8	6.33	32.4	6.38
	25	18.9	3.29	22.5	4.17	26.2	5.16	28.0	5.69	29.8	6.25	31.3	6.60	32.0	6.66
	27	18.9	3.51	22.5	4.45	26.2	5.51	28.0	6.09	29.8	6.69	30.8	6.88	31.5	6.94
	29	18.9	3.74	22.5	4.75	26.2	5.89	28.0	6.50	29.7	7.10	30.4	7.16	31.1	7.22
	31	18.9	3.98	22.5	5.06	26.2	6.28	28.0	6.94	29.3	7.38	29.9	7.44	30.6	7.50
	33	18.9	4.23	22.5	5.39	26.2	6.70	28.0	7.41	28.8	7.66	29.5	7.72	30.2	7.79
	35	18.9	4.50	22.5	5.74	26.2	7.14	28.0	7.90	28.3	7.93	29.0	8.00	29.7	8.07
	37	18.9	4.78	22.5	6.11	26.2	7.61	27.5	8.18	27.9	8.22	28.6	8.29	29.2	8.36
	39	18.9	5.07	22.5	6.50	26.2	8.10	27.1	8.46	27.4	8.50	28.1	8.57	28.8	8.65

Cooling capacity

Combination(%) (Capacity index)	Outdoor air temp. °CDB	Indoor air temp. 14.0°CWB TC kW	14.0°CWB PI kW	16.0°CWB TC kW	16.0°CWB PI kW	18.0°CWB TC kW	18.0°CWB PI kW	19.0°CWB TC kW	19.0°CWB PI kW	20.0°CWB TC kW	20.0°CWB PI kW	22.0°CWB TC kW	22.0°CWB PI kW	24.0°CWB TC kW	24.0°CWB PI kW
90 (225)	10	17.0	2.44	20.3	2.94	23.6	3.47	25.2	3.74	26.8	4.02	30.1	4.60	33.4	5.18
	12	17.0	2.48	20.3	2.99	23.6	3.53	25.2	3.81	26.8	4.10	30.1	4.68	33.4	5.28
	14	17.0	2.52	20.3	3.05	23.6	3.60	25.2	3.89	26.8	4.18	30.1	4.77	33.4	5.38
	16	17.0	2.57	20.3	3.10	23.6	3.67	25.2	3.96	26.8	4.26	30.1	4.87	33.3	5.47
	18	17.0	2.61	20.3	3.16	23.6	3.74	25.2	4.04	26.8	4.34	30.1	4.96	32.9	5.64
	20	17.0	2.66	20.3	3.22	23.6	3.81	25.2	4.12	26.8	4.51	30.1	5.33	32.4	5.91
	21	17.0	2.68	20.3	3.25	23.6	3.88	25.2	4.26	26.8	4.67	30.1	5.53	32.2	6.05
	23	17.0	2.74	20.3	3.39	23.6	4.15	25.2	4.57	26.8	5.00	30.1	5.93	31.7	6.33
	25	17.0	2.88	20.3	3.62	23.6	4.44	25.2	4.88	26.8	5.35	30.1	6.35	31.3	6.60
	27	17.0	3.07	20.3	3.86	23.6	4.74	25.2	5.22	26.8	5.72	30.1	6.79	30.8	6.88
	29	17.0	3.26	20.3	4.11	23.6	5.06	25.2	5.57	26.8	6.11	29.8	7.11	30.4	7.16
	31	17.0	3.47	20.3	4.38	23.6	5.39	25.2	5.94	26.8	6.52	29.3	7.38	29.9	7.44
	33	17.0	3.69	20.3	4.66	23.6	5.75	25.2	6.33	26.8	6.95	28.9	7.66	29.5	7.72
	35	17.0	3.91	20.3	4.95	23.6	6.12	25.2	6.75	26.8	7.41	28.4	7.94	29.0	8.00
	37	17.0	4.15	20.3	5.26	23.6	6.51	25.2	7.19	26.8	7.90	27.9	8.22	28.6	8.29
	39	17.0	4.41	20.3	5.60	23.6	6.93	25.2	7.65	26.8	8.41	27.5	8.50	28.1	8.57
80 (200)	10	15.1	2.16	18.0	2.59	20.9	3.04	22.4	3.28	23.9	3.52	26.8	4.01	29.7	4.52
	12	15.1	2.20	18.0	2.63	20.9	3.10	22.4	3.34	23.9	3.58	26.8	4.09	29.7	4.61
	14	15.1	2.23	18.0	2.68	20.9	3.15	22.4	3.40	23.9	3.65	26.8	4.17	29.7	4.69
	16	15.1	2.27	18.0	2.73	20.9	3.21	22.4	3.46	23.9	3.72	26.8	4.25	29.7	4.79
	18	15.1	2.31	18.0	2.78	20.9	3.27	22.4	3.53	23.9	3.79	26.8	4.33	29.7	4.88
	20	15.1	2.35	18.0	2.83	20.9	3.34	22.4	3.60	23.9	3.87	26.8	4.49	29.7	5.22
	21	15.1	2.37	18.0	2.86	20.9	3.37	22.4	3.64	23.9	3.95	26.8	4.65	29.7	5.41
	23	15.1	2.42	18.0	2.91	20.9	3.53	22.4	3.87	23.9	4.23	26.8	4.98	29.7	5.80
	25	15.1	2.50	18.0	3.10	20.9	3.78	22.4	4.14	23.9	4.52	26.8	5.33	29.7	6.21
	27	15.1	2.65	18.0	3.30	20.9	4.03	22.4	4.42	23.9	4.82	26.8	5.70	29.7	6.64
	29	15.1	2.82	18.0	3.52	20.9	4.29	22.4	4.71	23.9	5.15	26.8	6.08	29.7	7.10
	31	15.1	3.00	18.0	3.74	20.9	4.57	22.4	5.02	23.9	5.49	26.8	6.49	29.2	7.38
	33	15.1	3.18	18.0	3.98	20.9	4.87	22.4	5.35	23.9	5.85	26.8	6.93	28.8	7.65
	35	15.1	3.37	18.0	4.22	20.9	5.18	22.4	5.69	23.9	6.23	26.8	7.38	28.3	7.93
	37	15.1	3.57	18.0	4.49	20.9	5.50	22.4	6.06	23.9	6.63	26.8	7.87	27.9	8.21
	39	15.1	3.79	18.0	4.76	20.9	5.85	22.4	6.44	23.9	7.06	26.8	8.38	27.4	8.49
70 (175)	10	13.2	1.90	15.8	2.26	18.3	2.63	19.6	2.83	20.9	3.03	23.4	3.45	26.0	3.88
	12	13.2	1.93	15.8	2.29	18.3	2.68	19.6	2.88	20.9	3.09	23.4	3.51	26.0	3.95
	14	13.2	1.96	15.8	2.33	18.3	2.73	19.6	2.93	20.9	3.14	23.4	3.58	26.0	4.02
	16	13.2	1.99	15.8	2.37	18.3	2.78	19.6	2.99	20.9	3.20	23.4	3.64	26.0	4.10
	18	13.2	2.03	15.8	2.41	18.3	2.83	19.6	3.04	20.9	3.26	23.4	3.71	26.0	4.18
	20	13.2	2.06	15.8	2.46	18.3	2.88	19.6	3.10	20.9	3.33	23.4	3.79	26.0	4.30
	21	13.2	2.08	15.8	2.48	18.3	2.91	19.6	3.13	20.9	3.36	23.4	3.85	26.0	4.45
	23	13.2	2.11	15.8	2.53	18.3	2.97	19.6	3.24	20.9	3.52	23.4	4.12	26.0	4.77
	25	13.2	2.15	15.8	2.63	18.3	3.17	19.6	3.46	20.9	3.76	23.4	4.40	26.0	5.10
	27	13.2	2.27	15.8	2.80	18.3	3.37	19.6	3.68	20.9	4.01	23.4	4.70	26.0	5.45
	29	13.2	2.41	15.8	2.97	18.3	3.59	19.6	3.92	20.9	4.27	23.4	5.02	26.0	5.82
	31	13.2	2.56	15.8	3.16	18.3	3.82	19.6	4.18	20.9	4.55	23.4	5.35	26.0	6.21
	33	13.2	2.71	15.8	3.35	18.3	4.06	19.6	4.44	20.9	4.84	23.4	5.70	26.0	6.62
	35	13.2	2.87	15.8	3.56	18.3	4.32	19.6	4.72	20.9	5.15	23.4	6.07	26.0	7.06
	37	13.2	3.04	15.8	3.77	18.3	4.58	19.6	5.02	20.9	5.48	23.4	6.46	26.0	7.52
	39	13.2	3.22	15.8	4.00	18.3	4.87	19.6	5.33	20.9	5.83	23.4	6.87	26.0	8.01
60 (150)	10	11.3	1.65	13.5	1.94	15.7	2.25	16.8	2.41	17.9	2.57	20.1	2.91	22.3	3.26
	12	11.3	1.68	13.5	1.97	15.7	2.28	16.8	2.45	17.9	2.61	20.1	2.96	22.3	3.32
	14	11.3	1.70	13.5	2.00	15.7	2.32	16.8	2.49	17.9	2.66	20.1	3.01	22.3	3.38
	16	11.3	1.73	13.5	2.04	15.7	2.36	16.8	2.53	17.9	2.71	20.1	3.07	22.3	3.44
	18	11.3	1.75	13.5	2.07	15.7	2.40	16.8	2.58	17.9	2.76	20.1	3.12	22.3	3.51
	20	11.3	1.78	13.5	2.10	15.7	2.45	16.8	2.63	17.9	2.81	20.1	3.18	22.3	3.58
	21	11.3	1.80	13.5	2.12	15.7	2.47	16.8	2.65	17.9	2.83	20.1	3.22	22.3	3.61
	23	11.3	1.83	13.5	2.16	15.7	2.51	16.8	2.70	17.9	2.89	20.1	3.34	22.3	3.84
	25	11.3	1.86	13.5	2.20	15.7	2.61	16.8	2.84	17.9	3.07	20.1	3.57	22.3	4.10
	27	11.3	1.92	13.5	2.33	15.7	2.78	16.8	3.02	17.9	3.27	20.1	3.80	22.3	4.38
	29	11.3	2.04	13.5	2.47	15.7	2.96	16.8	3.21	17.9	3.48	20.1	4.05	22.3	4.67
	31	11.3	2.16	13.5	2.62	15.7	3.14	16.8	3.42	17.9	3.70	20.1	4.32	22.3	4.98
	33	11.3	2.28	13.5	2.78	15.7	3.33	16.8	3.63	17.9	3.94	20.1	4.59	22.3	5.30
	35	11.3	2.41	13.5	2.95	15.7	3.54	16.8	3.85	17.9	4.18	20.1	4.88	22.3	5.64
	37	11.3	2.55	13.5	3.12	15.7	3.75	16.8	4.09	17.9	4.44	20.1	5.19	22.3	6.00
	39	11.3	2.69	13.5	3.30	15.7	3.97	16.8	4.34	17.9	4.71	20.1	5.52	22.3	6.38
50 (125)	10	9.45	1.42	11.3	1.65	13.1	1.88	14.0	2.01	14.9	2.13	16.7	2.40	18.6	2.67
	12	9.45	1.44	11.3	1.67	13.1	1.91	14.0	2.04	14.9	2.17	16.7	2.44	18.6	2.72
	14	9.45	1.46	11.3	1.69	13.1	1.94	14.0	2.07	14.9	2.20	16.7	2.48	18.6	2.76
	16	9.45	1.48	11.3	1.72	13.1	1.97	14.0	2.11	14.9	2.24	16.7	2.52	18.6	2.81
	18	9.45	1.50	11.3	1.74	13.1	2.00	14.0	2.14	14.9	2.28	16.7	2.57	18.6	2.87
	20	9.45	1.52	11.3	1.77	13.1	2.04	14.0	2.18	14.9	2.32	16.7	2.61	18.6	2.92
	21	9.45	1.53	11.3	1.79	13.1	2.06	14.0	2.20	14.9	2.34	16.7	2.64	18.6	2.95
	23	9.45	1.56	11.3	1.82	13.1	2.09	14.0	2.24	14.9	2.38	16.7	2.69	18.6	3.02
	25	9.45	1.58	11.3	1.85	13.1	2.13	14.0	2.28	14.9	2.46	16.7	2.82	18.6	3.22
	27	9.45	1.60	11.3	1.91	13.1	2.25	14.0	2.43	14.9	2.61	16.7	3.01	18.6	3.43
	29	9.45	1.70	11.3	2.02	13.1	2.38	14.0	2.58	14.9	2.77	16.7	3.20	18.6	3.65
	31	9.45	1.79	11.3	2.14	13.1	2.53	14.0	2.73	14.9	2.95	16.7	3.40	18.6	3.88
	33	9.45	1.89	11.3	2.27	13.1	2.68	14.0	2.90	14.9	3.13	16.7	3.61	18.6	4.13
	35	9.45	2.00	11.3	2.40	13.1	2.84	14.0	3.07	14.9	3.31	16.7	3.83	18.6	4.39
	37	9.45	2.11	11.3	2.53	13.1	3.00	14.0	3.25	14.9	3.51	16.7	4.07	18.6	4.66
	39	9.45	2.22	11.3	2.68	13.1	3.18	14.0	3.44	14.9	3.72	16.7	4.31	18.6	4.95

TC Total capacity ; kW
PI Power Input ; kW(Comp.+Outdoor fan motor)
Note1: The above table shows the average value of conditions which may occur.

RXQ12PY1 [50Hz]

Cooling capacity

Combination(%) (Capacity index)	Outdoor air temp. °CDB	Indoor air temp. 14.0°CWB TC kW	14.0°CWB PI kW	16.0°CWB TC kW	16.0°CWB PI kW	18.0°CWB TC kW	18.0°CWB PI kW	19.0°CWB TC kW	19.0°CWB PI kW	20.0°CWB TC kW	20.0°CWB PI kW	22.0°CWB TC kW	22.0°CWB PI kW	24.0°CWB TC kW	24.0°CWB PI kW
130 (390)	10	29.4	4.11	35.1	5.03	40.7	5.99	42.2	6.11	42.7	5.99	43.8	5.74	44.8	5.48
	12	29.4	4.19	35.1	5.13	40.7	6.10	41.6	6.08	42.2	5.95	43.2	5.70	44.3	5.61
	14	29.4	4.27	35.1	5.23	40.6	6.18	41.1	6.05	41.6	5.92	42.7	5.87	43.8	5.93
	16	29.4	4.35	35.1	5.33	40.0	6.15	40.6	6.10	41.1	6.13	42.1	6.19	43.2	6.25
	18	29.4	4.43	35.1	5.43	39.5	6.38	40.0	6.41	40.5	6.45	41.6	6.51	42.7	6.57
	20	29.4	4.52	35.1	5.79	38.9	6.69	39.5	6.73	40.0	6.76	41.1	6.83	42.1	6.89
	21	29.4	4.65	35.1	6.00	38.7	6.85	39.2	6.88	39.7	6.92	40.8	6.99	41.8	7.06
	23	29.4	4.98	35.1	6.43	38.1	7.16	38.7	7.20	39.2	7.23	40.2	7.31	41.3	7.38
	25	29.4	5.32	35.1	6.88	37.6	7.47	38.1	7.51	38.6	7.55	39.7	7.63	40.8	7.71
	27	29.4	5.69	35.1	7.36	37.0	7.79	37.6	7.83	38.1	7.87	39.2	7.95	40.2	8.04
	29	29.4	6.07	35.1	7.87	36.5	8.10	37.0	8.15	37.5	8.19	38.6	8.28	39.7	8.37
	31	29.4	6.47	34.9	8.33	35.9	8.42	36.5	8.47	37.0	8.51	38.1	8.61	39.1	8.70
	33	29.4	6.90	34.3	8.64	35.4	8.74	35.9	8.79	36.5	8.84	37.5	8.94	38.6	9.03
	35	29.4	7.35	33.8	8.96	34.9	9.06	35.4	9.11	35.9	9.16	37.0	9.27	38.0	9.37
	37	29.4	7.83	33.2	9.27	34.3	9.38	34.8	9.44	35.4	9.49	36.4	9.6	37.5	9.7
	39	29.4	8.33	32.7	9.6	33.8	9.7	34.3	9.8	34.8	9.8	35.9	9.9	36.9	10.0
120 (360)	10	27.1	3.76	32.4	4.59	37.6	5.46	40.2	5.90	42.1	6.14	43.0	5.91	44.0	5.68
	12	27.1	3.83	32.4	4.68	37.6	5.56	40.2	6.01	41.5	6.11	42.5	5.88	43.5	5.64
	14	27.1	3.90	32.4	4.76	37.6	5.67	40.2	6.13	41.0	6.08	41.9	5.84	42.9	5.89
	16	27.1	3.97	32.4	4.86	37.6	5.78	39.9	6.17	40.4	6.09	41.4	6.15	42.4	6.20
	18	27.1	4.05	32.4	4.95	37.6	5.98	39.4	6.38	39.9	6.41	40.9	6.46	41.8	6.52
	20	27.1	4.13	32.4	5.15	37.6	6.42	38.8	6.69	39.3	6.72	40.3	6.78	41.3	6.84
	21	27.1	4.17	32.4	5.33	37.6	6.66	38.6	6.84	39.1	6.87	40.0	6.94	41.0	7.00
	23	27.1	4.45	32.4	5.71	37.5	7.12	38.0	7.15	38.5	7.19	39.5	7.26	40.5	7.32
	25	27.1	4.76	32.4	6.11	37.0	7.43	37.5	7.47	38.0	7.50	38.9	7.57	39.9	7.65
	27	27.1	5.08	32.4	6.54	36.4	7.74	36.9	7.78	37.4	7.82	38.4	7.90	39.4	7.97
	29	27.1	5.42	32.4	6.98	35.9	8.06	36.4	8.10	36.9	8.14	37.9	8.22	38.8	8.30
	31	27.1	5.77	32.4	7.45	35.4	8.37	35.8	8.41	36.3	8.46	37.3	8.54	38.3	8.63
	33	27.1	6.15	32.4	7.95	34.8	8.69	35.3	8.73	35.8	8.78	36.8	8.87	37.7	8.96
	35	27.1	6.55	32.4	8.47	34.3	9.00	34.8	9.05	35.2	9.10	36.2	9.19	37.2	9.29
	37	27.1	6.97	32.4	9.03	33.7	9.32	34.2	9.37	34.7	9.42	35.7	9.52	36.7	9.6
	39	27.1	7.41	32.2	9.54	33.2	9.6	33.7	9.7	34.2	9.7	35.1	9.9	36.1	10.0
110 (330)	10	24.9	3.41	29.7	4.15	34.5	4.93	36.9	5.33	39.2	5.74	42.3	6.09	43.2	5.88
	12	24.9	3.47	29.7	4.23	34.5	5.03	36.9	5.43	39.2	5.85	41.7	6.06	42.6	5.84
	14	24.9	3.54	29.7	4.31	34.5	5.12	36.9	5.54	39.2	5.96	41.2	6.03	42.1	5.84
	16	24.9	3.60	29.7	4.39	34.5	5.22	36.9	5.65	39.2	6.07	40.6	6.11	41.5	6.16
	18	24.9	3.67	29.7	4.48	34.5	5.33	36.9	5.80	39.2	6.37	40.1	6.42	41.0	6.47
	20	24.9	3.74	29.7	4.57	34.5	5.64	36.9	6.23	38.7	6.68	39.6	6.73	40.5	6.79
	21	24.9	3.78	29.7	4.71	34.5	5.85	36.9	6.46	38.4	6.83	39.3	6.89	40.2	6.95
	23	24.9	3.96	29.7	5.04	34.5	6.27	36.9	6.93	37.8	7.14	38.7	7.20	39.6	7.27
	25	24.9	4.22	29.7	5.39	34.5	6.71	36.9	7.42	37.3	7.45	38.2	7.52	39.1	7.59
	27	24.9	4.51	29.7	5.76	34.5	7.17	36.3	7.73	36.8	7.77	37.7	7.84	38.5	7.91
	29	24.9	4.80	29.7	6.15	34.5	7.67	35.8	8.05	36.2	8.08	37.1	8.16	38.0	8.23
	31	24.9	5.11	29.7	6.56	34.5	8.19	35.2	8.36	35.7	8.40	36.6	8.48	37.5	8.55
	33	24.9	5.44	29.7	6.99	34.2	8.63	34.7	8.67	35.1	8.72	36.0	8.80	36.9	8.88
	35	24.9	5.79	29.7	7.45	33.7	8.95	34.1	8.99	34.6	9.03	35.5	9.12	36.4	9.21
	37	24.9	6.16	29.7	7.93	33.1	9.26	33.6	9.31	34.0	9.35	34.9	9.45	35.8	9.54
	39	24.9	6.55	29.7	8.45	32.6	9.6	33.0	9.6	33.5	9.7	34.4	9.8	35.3	9.9
100 (300)	10	22.6	3.08	27.0	3.73	31.3	4.42	33.5	4.78	35.7	5.14	40.0	5.87	42.3	6.08
	12	22.6	3.13	27.0	3.80	31.3	4.50	33.5	4.87	35.7	5.23	40.0	5.98	41.8	6.04
	14	22.6	3.19	27.0	3.87	31.3	4.59	33.5	4.96	35.7	5.33	40.0	6.10	41.3	6.01
	16	22.6	3.24	27.0	3.94	31.3	4.68	33.5	5.06	35.7	5.44	39.9	6.18	40.7	6.11
	18	22.6	3.30	27.0	4.02	31.3	4.77	33.5	5.16	35.7	5.55	39.4	6.38	40.2	6.42
	20	22.6	3.37	27.0	4.10	31.3	4.91	33.5	5.42	35.7	5.94	38.8	6.69	39.6	6.74
	21	22.6	3.40	27.0	4.14	31.3	5.09	33.5	5.61	35.7	6.16	38.5	6.84	39.4	6.89
	23	22.6	3.49	27.0	4.41	31.3	5.45	33.5	6.01	35.7	6.60	38.0	7.15	38.8	7.21
	25	22.6	3.72	27.0	4.72	31.3	5.83	33.5	6.43	35.7	7.07	37.4	7.47	38.3	7.52
	27	22.6	3.97	27.0	5.04	31.3	6.23	33.5	6.88	35.7	7.56	36.9	7.78	37.7	7.84
	29	22.6	4.23	27.0	5.37	31.3	6.66	33.5	7.35	35.5	8.03	36.4	8.09	37.2	8.16
	31	22.6	4.50	27.0	5.72	31.3	7.10	33.5	7.85	35.0	8.34	35.8	8.41	36.6	8.48
	33	22.6	4.78	27.0	6.10	31.3	7.57	33.5	8.37	34.5	8.65	35.3	8.73	36.1	8.80
	35	22.6	5.08	27.0	6.49	31.3	8.07	33.5	8.93	33.9	8.97	34.7	9.05	35.5	9.13
	37	22.6	5.40	27.0	6.91	31.3	8.60	33.0	9.24	33.4	9.29	34.2	9.37	35.0	9.45
	39	22.6	5.74	27.0	7.35	31.3	9.16	32.4	9.56	32.8	9.6	33.6	9.7	34.4	9.8

Cooling capacity

Combination(%) (Capacity index)	Outdoor air temp. °CDB	Indoor air temp. 14.0°CWB TC kW	14.0°CWB PI kW	16.0°CWB TC kW	16.0°CWB PI kW	18.0°CWB TC kW	18.0°CWB PI kW	19.0°CWB TC kW	19.0°CWB PI kW	20.0°CWB TC kW	20.0°CWB PI kW	22.0°CWB TC kW	22.0°CWB PI kW	24.0°CWB TC kW	24.0°CWB PI kW
90 (270)	10	20.3	2.75	24.3	3.32	28.2	3.92	30.2	4.23	32.1	4.55	36.0	5.20	40.0	5.86
	12	20.3	2.80	24.3	3.38	28.2	3.99	30.2	4.31	32.1	4.63	36.0	5.29	40.0	5.97
	14	20.3	2.85	24.3	3.44	28.2	4.07	30.2	4.39	32.1	4.72	36.0	5.40	40.0	6.08
	16	20.3	2.90	24.3	3.51	28.2	4.15	30.2	4.48	32.1	4.81	36.0	5.50	39.9	6.18
	18	20.3	2.95	24.3	3.57	28.2	4.23	30.2	4.57	32.1	4.91	36.0	5.61	39.3	6.37
	20	20.3	3.01	24.3	3.64	28.2	4.31	30.2	4.66	32.1	5.09	36.0	6.03	38.8	6.68
	21	20.3	3.03	24.3	3.68	28.2	4.39	30.2	4.82	32.1	5.27	36.0	6.25	38.5	6.84
	23	20.3	3.09	24.3	3.83	28.2	4.69	30.2	5.16	32.1	5.65	36.0	6.70	38.0	7.15
	25	20.3	3.26	24.3	4.09	28.2	5.02	30.2	5.52	32.1	6.05	36.0	7.17	37.4	7.46
	27	20.3	3.47	24.3	4.36	28.2	5.36	30.2	5.90	32.1	6.46	36.0	7.67	36.9	7.78
	29	20.3	3.69	24.3	4.65	28.2	5.72	30.2	6.30	32.1	6.90	35.6	8.03	36.3	8.09
	31	20.3	3.92	24.3	4.95	28.2	6.10	30.2	6.72	32.1	7.37	35.1	8.35	35.8	8.41
	33	20.3	4.17	24.3	5.26	28.2	6.49	30.2	7.16	32.1	7.86	34.5	8.66	35.3	8.73
	35	20.3	4.42	24.3	5.60	28.2	6.92	30.2	7.63	32.1	8.38	34.0	8.98	34.7	9.05
	37	20.3	4.69	24.3	5.95	28.2	7.36	30.2	8.13	32.1	8.93	33.4	9.29	34.2	9.37
	39	20.3	4.98	24.3	6.32	28.2	7.84	30.2	8.65	32.1	9.51	32.9	9.6	33.6	9.7
80 (240)	10	18.1	2.44	21.6	2.93	25.1	3.44	26.8	3.71	28.5	3.98	32.0	4.54	35.5	5.11
	12	18.1	2.48	21.6	2.98	25.1	3.50	26.8	3.77	28.5	4.05	32.0	4.62	35.5	5.21
	14	18.1	2.53	21.6	3.03	25.1	3.57	26.8	3.84	28.5	4.13	32.0	4.71	35.5	5.31
	16	18.1	2.57	21.6	3.08	25.1	3.63	26.8	3.92	28.5	4.21	32.0	4.80	35.5	5.41
	18	18.1	2.61	21.6	3.14	25.1	3.70	26.8	3.99	28.5	4.29	32.0	4.89	35.5	5.52
	20	18.1	2.66	21.6	3.20	25.1	3.77	26.8	4.07	28.5	4.37	32.0	5.07	35.5	5.90
	21	18.1	2.68	21.6	3.23	25.1	3.81	26.8	4.11	28.5	4.46	32.0	5.25	35.5	6.11
	23	18.1	2.73	21.6	3.29	25.1	4.00	26.8	4.38	28.5	4.78	32.0	5.63	35.5	6.55
	25	18.1	2.82	21.6	3.51	25.1	4.27	26.8	4.68	28.5	5.11	32.0	6.02	35.5	7.02
	27	18.1	3.00	21.6	3.73	25.1	4.55	26.8	4.99	28.5	5.45	32.0	6.44	35.5	7.51
	29	18.1	3.19	21.6	3.98	25.1	4.85	26.8	5.32	28.5	5.82	32.0	6.88	35.5	8.03
	31	18.1	3.39	21.6	4.23	25.1	5.17	26.8	5.67	28.5	6.21	32.0	7.34	35.0	8.34
	33	18.1	3.59	21.6	4.49	25.1	5.50	26.8	6.04	28.5	6.61	32.0	7.83	34.4	8.65
	35	18.1	3.81	21.6	4.77	25.1	5.85	26.8	6.43	28.5	7.04	32.0	8.35	33.9	8.97
	37	18.1	4.04	21.6	5.07	25.1	6.22	26.8	6.84	28.5	7.50	32.0	8.89	33.3	9.28
	39	18.1	4.28	21.6	5.38	25.1	6.62	26.8	7.28	28.5	7.98	32.0	9.47	32.8	9.6
70 (210)	10	15.8	2.15	18.9	2.55	21.9	2.98	23.5	3.20	25.0	3.43	28.0	3.90	31.1	4.38
	12	15.8	2.18	18.9	2.59	21.9	3.03	23.5	3.26	25.0	3.49	28.0	3.97	31.1	4.46
	14	15.8	2.22	18.9	2.64	21.9	3.08	23.5	3.32	25.0	3.55	28.0	4.04	31.1	4.55
	16	15.8	2.25	18.9	2.68	21.9	3.14	23.5	3.38	25.0	3.62	28.0	4.12	31.1	4.64
	18	15.8	2.29	18.9	2.73	21.9	3.20	23.5	3.44	25.0	3.69	28.0	4.20	31.1	4.73
	20	15.8	2.33	18.9	2.78	21.9	3.26	23.5	3.51	25.0	3.76	28.0	4.28	31.1	4.86
	21	15.8	2.35	18.9	2.80	21.9	3.29	23.5	3.54	25.0	3.80	28.0	4.35	31.1	5.03
	23	15.8	2.39	18.9	2.86	21.9	3.36	23.5	3.66	25.0	3.98	28.0	4.66	31.1	5.39
	25	15.8	2.43	18.9	2.97	21.9	3.58	23.5	3.91	25.0	4.25	28.0	4.98	31.1	5.77
	27	15.8	2.57	18.9	3.16	21.9	3.81	23.5	4.16	25.0	4.53	28.0	5.31	31.1	6.16
	29	15.8	2.73	18.9	3.36	21.9	4.06	23.5	4.44	25.0	4.83	28.0	5.67	31.1	6.58
	31	15.8	2.89	18.9	3.57	21.9	4.32	23.5	4.72	25.0	5.14	28.0	6.04	31.1	7.02
	33	15.8	3.06	18.9	3.79	21.9	4.59	23.5	5.02	25.0	5.48	28.0	6.44	31.1	7.49
	35	15.8	3.25	18.9	4.02	21.9	4.88	23.5	5.34	25.0	5.82	28.0	6.86	31.1	7.98
	37	15.8	3.44	18.9	4.26	21.9	5.18	23.5	5.68	25.0	6.19	28.0	7.30	31.1	8.50
	39	15.8	3.64	18.9	4.52	21.9	5.50	23.5	6.03	25.0	6.58	28.0	7.77	31.1	9.05
60 (180)	10	13.6	1.87	16.2	2.19	18.8	2.54	20.1	2.72	21.4	2.90	24.0	3.28	26.6	3.68
	12	13.6	1.90	16.2	2.23	18.8	2.58	20.1	2.77	21.4	2.95	24.0	3.34	26.6	3.75
	14	13.6	1.92	16.2	2.26	18.8	2.63	20.1	2.81	21.4	3.01	24.0	3.40	26.6	3.82
	16	13.6	1.95	16.2	2.30	18.8	2.67	20.1	2.86	21.4	3.06	24.0	3.47	26.6	3.89
	18	13.6	1.98	16.2	2.34	18.8	2.72	20.1	2.91	21.4	3.12	24.0	3.53	26.6	3.96
	20	13.6	2.01	16.2	2.38	18.8	2.77	20.1	2.97	21.4	3.17	24.0	3.60	26.6	4.04
	21	13.6	2.03	16.2	2.40	18.8	2.79	20.1	2.99	21.4	3.20	24.0	3.64	26.6	4.08
	23	13.6	2.06	16.2	2.44	18.8	2.84	20.1	3.05	21.4	3.27	24.0	3.78	26.6	4.34
	25	13.6	2.10	16.2	2.49	18.8	2.95	20.1	3.21	21.4	3.47	24.0	4.03	26.6	4.64
	27	13.6	2.17	16.2	2.63	18.8	3.14	20.1	3.41	21.4	3.70	24.0	4.30	26.6	4.95
	29	13.6	2.30	16.2	2.80	18.8	3.34	20.1	3.63	21.4	3.94	24.0	4.58	26.6	5.28
	31	13.6	2.44	16.2	2.97	18.8	3.55	20.1	3.86	21.4	4.19	24.0	4.88	26.6	5.63
	33	13.6	2.58	16.2	3.14	18.8	3.77	20.1	4.10	21.4	4.45	24.0	5.19	26.6	5.99
	35	13.6	2.73	16.2	3.33	18.8	4.00	20.1	4.35	21.4	4.73	24.0	5.52	26.6	6.38
	37	13.6	2.88	16.2	3.53	18.8	4.24	20.1	4.62	21.4	5.02	24.0	5.87	26.6	6.78
	39	13.6	3.05	16.2	3.73	18.8	4.49	20.1	4.90	21.4	5.33	24.0	6.23	26.6	7.22
50 (150)	10	11.3	1.61	13.5	1.86	15.7	2.13	16.8	2.27	17.8	2.41	20.0	2.71	22.2	3.02
	12	11.3	1.63	13.5	1.89	15.7	2.16	16.8	2.30	17.8	2.45	20.0	2.75	22.2	3.07
	14	11.3	1.65	13.5	1.91	15.7	2.19	16.8	2.34	17.8	2.49	20.0	2.80	22.2	3.12
	16	11.3	1.67	13.5	1.94	15.7	2.23	16.8	2.38	17.8	2.53	20.0	2.85	22.2	3.18
	18	11.3	1.70	13.5	1.97	15.7	2.27	16.8	2.42	17.8	2.58	20.0	2.90	22.2	3.24
	20	11.3	1.72	13.5	2.00	15.7	2.30	16.8	2.46	17.8	2.62	20.0	2.95	22.2	3.30
	21	11.3	1.73	13.5	2.02	15.7	2.32	16.8	2.48	17.8	2.65	20.0	2.98	22.2	3.33
	23	11.3	1.76	13.5	2.05	15.7	2.36	16.8	2.53	17.8	2.69	20.0	3.04	22.2	3.41
	25	11.3	1.78	13.5	2.09	15.7	2.41	16.8	2.58	17.8	2.78	20.0	3.19	22.2	3.64
	27	11.3	1.81	13.5	2.16	15.7	2.54	16.8	2.74	17.8	2.95	20.0	3.40	22.2	3.87
	29	11.3	1.92	13.5	2.29	15.7	2.70	16.8	2.91	17.8	3.14	20.0	3.61	22.2	4.13
	31	11.3	2.03	13.5	2.42	15.7	2.86	16.8	3.09	17.8	3.33	20.0	3.84	22.2	4.39
	33	11.3	2.14	13.5	2.56	15.7	3.03	16.8	3.28	17.8	3.53	20.0	4.08	22.2	4.67
	35	11.3	2.26	13.5	2.71	15.7	3.21	16.8	3.47	17.8	3.75	20.0	4.33	22.2	4.96
	37	11.3	2.38	13.5	2.86	15.7	3.39	16.8	3.68	17.8	3.97	20.0	4.60	22.2	5.27
	39	11.3	2.51	13.5	3.03	15.7	3.59	16.8	3.89	17.8	4.21	20.0	4.87	22.2	5.59

TC Total capacity ; kW
PI Power Input ; kW(Comp.+Outdoor fan motor)
Note1: The above table shows the average value of conditions which may occur.

RXQ14PY1 [50Hz]

Cooling capacity

Combination(%) (Capacity index)	Outdoor air temp. °CDB	Indoor air temp. 14.0°CWB TC kW	14.0°CWB PI kW	16.0°CWB TC kW	16.0°CWB PI kW	18.0°CWB TC kW	18.0°CWB PI kW	19.0°CWB TC kW	19.0°CWB PI kW	20.0°CWB TC kW	20.0°CWB PI kW	22.0°CWB TC kW	22.0°CWB PI kW	24.0°CWB TC kW	24.0°CWB PI kW
130 (455)	10	35.1	5.71	41.9	6.99	48.6	8.31	50.4	8.49	51.0	8.32	52.3	7.96	53.5	7.61
	12	35.1	5.81	41.9	7.12	48.6	8.47	49.7	8.44	50.4	8.27	51.6	7.91	52.9	7.79
	14	35.1	5.92	41.9	7.26	48.4	8.58	49.1	8.40	49.7	8.22	51.0	8.16	52.2	8.23
	16	35.1	6.04	41.9	7.40	47.8	8.53	48.4	8.47	49.1	8.51	50.3	8.60	51.6	8.68
	18	35.1	6.16	41.9	7.55	47.1	8.86	47.8	8.91	48.4	8.95	49.7	9.04	50.9	9.12
	20	35.1	6.28	41.9	8.04	46.5	9.3	47.1	9.3	47.8	9.4	49.0	9.5	50.3	9.6
	21	35.1	6.46	41.9	8.33	46.2	9.5	46.8	9.6	47.4	9.6	48.7	9.7	50.0	9.8
	23	35.1	6.91	41.9	8.93	45.5	9.9	46.1	10.0	46.8	10.0	48.0	10.1	49.3	10.2
	25	35.1	7.39	41.9	9.6	44.9	10.4	45.5	10.4	46.1	10.5	47.4	10.6	48.7	10.7
	27	35.1	7.90	41.9	10.2	44.2	10.8	44.8	10.9	45.5	10.9	46.7	11.0	48.0	11.2
	29	35.1	8.43	41.9	10.9	43.6	11.3	44.2	11.3	44.8	11.4	46.1	11.5	47.4	11.6
	31	35.1	8.99	41.6	11.6	42.9	11.7	43.5	11.8	44.2	11.8	45.4	12.0	46.7	12.1
	33	35.1	9.6	41.0	12.0	42.3	12.1	42.9	12.2	43.5	12.3	44.8	12.4	46.1	12.5
	35	35.1	10.2	40.3	12.4	41.6	12.6	42.2	12.7	42.9	12.7	44.1	12.9	45.4	13.0
	37	35.1	10.9	39.7	12.9	41.0	13.0	41.6	13.1	42.2	13.2	43.5	13.3	44.8	13.5
	39	35.1	11.6	39.0	13.3	40.3	13.5	40.9	13.6	41.6	13.6	42.8	13.8	44.1	14.0
120 (420)	10	32.4	5.22	38.6	6.37	44.9	7.58	48.0	8.19	50.2	8.53	51.4	8.21	52.6	7.89
	12	32.4	5.31	38.6	6.49	44.9	7.72	48.0	8.35	49.6	8.49	50.7	8.16	51.9	7.83
	14	32.4	5.41	38.6	6.62	44.9	7.87	48.0	8.51	48.9	8.45	50.1	8.11	51.2	8.17
	16	32.4	5.51	38.6	6.74	44.9	8.02	47.7	8.57	48.3	8.46	49.4	8.54	50.6	8.61
	18	32.4	5.62	38.6	6.88	44.9	8.30	47.0	8.85	47.6	8.89	48.8	8.97	49.9	9.06
	20	32.4	5.73	38.6	7.15	44.9	8.92	46.4	9.3	47.0	9.3	48.1	9.4	49.3	9.5
	21	32.4	5.79	38.6	7.41	44.9	9.24	46.1	9.5	46.6	9.5	47.8	9.6	49.0	9.7
	23	32.4	6.18	38.6	7.93	44.8	9.9	45.4	9.9	46.0	10.0	47.2	10.1	48.3	10.2
	25	32.4	6.61	38.6	8.49	44.2	10.3	44.8	10.4	45.3	10.4	46.5	10.5	47.7	10.6
	27	32.4	7.05	38.6	9.08	43.5	10.8	44.1	10.8	44.7	10.9	45.9	11.0	47.0	11.1
	29	32.4	7.52	38.6	9.7	42.9	11.2	43.4	11.2	44.0	11.3	45.2	11.4	46.4	11.5
	31	32.4	8.02	38.6	10.3	42.2	11.6	42.8	11.7	43.4	11.7	44.6	11.9	45.7	12.0
	33	32.4	8.54	38.6	11.0	41.6	12.1	42.1	12.1	42.7	12.2	43.9	12.3	45.1	12.4
	35	32.4	9.09	38.6	11.8	40.9	12.5	41.5	12.6	42.1	12.6	43.2	12.8	44.4	12.9
	37	32.4	9.7	38.6	12.5	40.3	12.9	40.8	13.0	41.4	13.1	42.6	13.2	43.8	13.4
	39	32.4	10.3	38.4	13.2	39.6	13.4	40.2	13.5	40.8	13.5	41.9	13.7	43.1	13.8
110 (385)	10	29.7	4.74	35.4	5.77	41.1	6.85	44.0	7.41	46.9	7.97	50.5	8.46	51.6	8.16
	12	29.7	4.82	35.4	5.88	41.1	6.98	44.0	7.55	46.9	8.12	49.8	8.41	50.9	8.12
	14	29.7	4.91	35.4	5.99	41.1	7.11	44.0	7.69	46.9	8.27	49.2	8.37	50.3	8.11
	16	29.7	5.00	35.4	6.10	41.1	7.25	44.0	7.84	46.9	8.43	48.5	8.48	49.6	8.55
	18	29.7	5.10	35.4	6.22	41.1	7.40	44.0	8.06	46.8	8.84	47.9	8.91	49.0	8.99
	20	29.7	5.20	35.4	6.35	41.1	7.84	44.0	8.66	46.2	9.3	47.2	9.3	48.3	9.4
	21	29.7	5.25	35.4	6.54	41.1	8.12	44.0	8.97	45.8	9.5	46.9	9.6	48.0	9.6
	23	29.7	5.49	35.4	7.00	41.1	8.70	44.0	9.6	45.2	9.9	46.3	10.0	47.3	10.1
	25	29.7	5.87	35.4	7.49	41.1	9.3	44.0	10.3	44.5	10.4	45.6	10.4	46.7	10.5
	27	29.7	6.26	35.4	8.00	41.1	10.0	43.4	10.7	43.9	10.8	45.0	10.9	46.0	11.0
	29	29.7	6.67	35.4	8.54	41.1	10.6	42.7	11.2	43.2	11.2	44.3	11.3	45.4	11.4
	31	29.7	7.10	35.4	9.11	41.1	11.4	42.0	11.6	42.6	11.7	43.7	11.8	44.7	11.9
	33	29.7	7.56	35.4	9.7	40.9	12.0	41.4	12.0	41.9	12.1	43.0	12.2	44.1	12.3
	35	29.7	8.04	35.4	10.3	40.2	12.4	40.7	12.5	41.3	12.5	42.4	12.7	43.4	12.8
	37	29.7	8.55	35.4	11.0	39.6	12.9	40.1	12.9	40.6	13.0	41.7	13.1	42.8	13.2
	39	29.7	9.09	35.4	11.7	38.9	13.3	39.4	13.4	40.0	13.4	41.1	13.6	42.1	13.7
100 (350)	10	27.0	4.27	32.2	5.18	37.4	6.14	40.0	6.63	42.6	7.13	47.8	8.15	50.6	8.44
	12	27.0	4.35	32.2	5.28	37.4	6.25	40.0	6.76	42.6	7.27	47.8	8.31	49.9	8.39
	14	27.0	4.42	32.2	5.37	37.4	6.37	40.0	6.89	42.6	7.41	47.8	8.46	49.3	8.35
	16	27.0	4.51	32.2	5.48	37.4	6.50	40.0	7.02	42.6	7.55	47.6	8.58	48.6	8.49
	18	27.0	4.59	32.2	5.58	37.4	6.62	40.0	7.16	42.6	7.70	47.0	8.85	48.0	8.92
	20	27.0	4.68	32.2	5.69	37.4	6.82	40.0	7.52	42.6	8.25	46.3	9.3	47.3	9.4
	21	27.0	4.72	32.2	5.75	37.4	7.07	40.0	7.79	42.6	8.55	46.0	9.5	47.0	9.6
	23	27.0	4.85	32.2	6.13	37.4	7.57	40.0	8.35	42.6	9.16	45.4	9.9	46.3	10.0
	25	27.0	5.17	32.2	6.55	37.4	8.10	40.0	8.94	42.6	9.8	44.7	10.4	45.7	10.4
	27	27.0	5.51	32.2	6.99	37.4	8.65	40.0	9.6	42.6	10.5	44.1	10.8	45.0	10.9
	29	27.0	5.87	32.2	7.46	37.4	9.24	40.0	10.2	42.4	11.1	43.4	11.2	44.4	11.3
	31	27.0	6.25	32.2	7.95	37.4	9.9	40.0	10.9	41.8	11.6	42.8	11.7	43.7	11.8
	33	27.0	6.64	32.2	8.46	37.4	10.5	40.0	11.6	41.1	12.0	42.1	12.1	43.1	12.2
	35	27.0	7.06	32.2	9.01	37.4	11.2	40.0	12.4	40.5	12.5	41.5	12.6	42.4	12.7
	37	27.0	7.50	32.2	9.6	37.4	11.9	39.3	12.8	39.8	12.9	40.8	13.0	41.8	13.1
	39	27.0	7.96	32.2	10.2	37.4	12.7	38.7	13.3	39.2	13.3	40.2	13.5	41.1	13.6

Cooling capacity

Combination(%) (Capacity index)	Outdoor air temp. °CDB	Indoor air temp. 14.0°CWB TC kW	14.0°CWB PI kW	16.0°CWB TC kW	16.0°CWB PI kW	18.0°CWB TC kW	18.0°CWB PI kW	19.0°CWB TC kW	19.0°CWB PI kW	20.0°CWB TC kW	20.0°CWB PI kW	22.0°CWB TC kW	22.0°CWB PI kW	24.0°CWB TC kW	24.0°CWB PI kW
90 (315)	10	24.3	3.82	29.0	4.61	33.7	5.45	36.0	5.88	38.3	6.32	43.0	7.22	47.7	8.13
	12	24.3	3.89	29.0	4.69	33.7	5.55	36.0	5.99	38.3	6.43	43.0	7.35	47.7	8.29
	14	24.3	3.96	29.0	4.78	33.7	5.65	36.0	6.10	38.3	6.56	43.0	7.49	47.7	8.44
	16	24.3	4.03	29.0	4.87	33.7	5.76	36.0	6.22	38.3	6.68	43.0	7.64	47.6	8.58
	18	24.3	4.10	29.0	4.96	33.7	5.87	36.0	6.34	38.3	6.82	43.0	7.79	47.0	8.85
	20	24.3	4.17	29.0	5.06	33.7	5.99	36.0	6.47	38.3	7.07	43.0	8.37	46.3	9.3
	21	24.3	4.21	29.0	5.11	33.7	6.09	36.0	6.69	38.3	7.32	43.0	8.67	46.0	9.5
	23	24.3	4.29	29.0	5.32	33.7	6.52	36.0	7.17	38.3	7.85	43.0	9.3	45.3	9.9
	25	24.3	4.52	29.0	5.68	33.7	6.97	36.0	7.67	38.3	8.40	43.0	10.0	44.7	10.4
	27	24.3	4.81	29.0	6.05	33.7	7.44	36.0	8.19	38.3	8.98	43.0	10.7	44.0	10.8
	29	24.3	5.12	29.0	6.45	33.7	7.94	36.0	8.74	38.3	9.6	42.5	11.2	43.4	11.2
	31	24.3	5.45	29.0	6.87	33.7	8.46	36.0	9.3	38.3	10.2	41.9	11.6	42.7	11.7
	33	24.3	5.78	29.0	7.31	33.7	9.02	36.0	9.9	38.3	10.9	41.2	12.0	42.1	12.1
	35	24.3	6.14	29.0	7.77	33.7	9.6	36.0	10.6	38.3	11.6	40.6	12.5	41.4	12.6
	37	24.3	6.52	29.0	8.26	33.7	10.2	36.0	11.3	38.3	12.4	39.9	12.9	40.8	13.0
	39	24.3	6.92	29.0	8.78	33.7	10.9	36.0	12.0	38.3	13.2	39.3	13.3	40.1	13.5
80 (280)	10	21.6	3.40	25.8	4.07	29.9	4.78	32.0	5.15	34.1	5.52	38.2	6.30	42.4	7.10
	12	21.6	3.45	25.8	4.14	29.9	4.86	32.0	5.24	34.1	5.62	38.2	6.42	42.4	7.23
	14	21.6	3.51	25.8	4.21	29.9	4.95	32.0	5.34	34.1	5.73	38.2	6.54	42.4	7.37
	16	21.6	3.57	25.8	4.28	29.9	5.04	32.0	5.44	34.1	5.84	38.2	6.67	42.4	7.51
	18	21.6	3.63	25.8	4.36	29.9	5.14	32.0	5.54	34.1	5.95	38.2	6.80	42.4	7.66
	20	21.6	3.69	25.8	4.44	29.9	5.24	32.0	5.65	34.1	6.07	38.2	7.05	42.4	8.19
	21	21.6	3.73	25.8	4.49	29.9	5.29	32.0	5.71	34.1	6.20	38.2	7.30	42.4	8.49
	23	21.6	3.79	25.8	4.57	29.9	5.55	32.0	6.08	34.1	6.63	38.2	7.82	42.4	9.10
	25	21.6	3.92	25.8	4.87	29.9	5.93	32.0	6.49	34.1	7.09	38.2	8.36	42.4	9.7
	27	21.6	4.17	25.8	5.19	29.9	6.32	32.0	6.93	34.1	7.57	38.2	8.94	42.4	10.4
	29	21.6	4.43	25.8	5.52	29.9	6.74	32.0	7.39	34.1	8.08	38.2	9.5	42.4	11.1
	31	21.6	4.70	25.8	5.87	29.9	7.18	32.0	7.88	34.1	8.62	38.2	10.2	41.8	11.6
	33	21.6	4.99	25.8	6.24	29.9	7.64	32.0	8.39	34.1	9.18	38.2	10.9	41.1	12.0
	35	21.6	5.29	25.8	6.63	29.9	8.13	32.0	8.93	34.1	9.8	38.2	11.6	40.4	12.5
	37	21.6	5.61	25.8	7.04	29.9	8.64	32.0	9.50	34.1	10.4	38.2	12.3	39.8	12.9
	39	21.6	5.94	25.8	7.47	29.9	9.19	32.0	10.11	34.1	11.1	38.2	13.2	39.1	13.3
70 (245)	10	18.9	2.99	22.5	3.54	26.2	4.14	28.0	4.44	29.8	4.76	33.5	5.41	37.1	6.08
	12	18.9	3.03	22.5	3.60	26.2	4.21	28.0	4.52	29.8	4.84	33.5	5.51	37.1	6.20
	14	18.9	3.08	22.5	3.66	26.2	4.28	28.0	4.60	29.8	4.93	33.5	5.61	37.1	6.31
	16	18.9	3.13	22.5	3.72	26.2	4.36	28.0	4.69	29.8	5.03	33.5	5.72	37.1	6.44
	18	18.9	3.18	22.5	3.79	26.2	4.44	28.0	4.78	29.8	5.12	33.5	5.83	37.1	6.56
	20	18.9	3.23	22.5	3.86	26.2	4.52	28.0	4.87	29.8	5.22	33.5	5.95	37.1	6.75
	21	18.9	3.26	22.5	3.89	26.2	4.57	28.0	4.91	29.8	5.27	33.5	6.04	37.1	6.99
	23	18.9	3.32	22.5	3.97	26.2	4.66	28.0	5.08	29.8	5.52	33.5	6.47	37.1	7.48
	25	18.9	3.38	22.5	4.12	26.2	4.97	28.0	5.42	29.8	5.90	33.5	6.91	37.1	8.01
	27	18.9	3.57	22.5	4.39	26.2	5.30	28.0	5.78	29.8	6.29	33.5	7.38	37.1	8.56
	29	18.9	3.79	22.5	4.66	26.2	5.64	28.0	6.16	29.8	6.71	33.5	7.87	37.1	9.14
	31	18.9	4.02	22.5	4.95	26.2	6.00	28.0	6.56	29.8	7.14	33.5	8.39	37.1	9.7
	33	18.9	4.26	22.5	5.26	26.2	6.38	28.0	6.98	29.8	7.60	33.5	8.94	37.1	10.4
	35	18.9	4.51	22.5	5.58	26.2	6.77	28.0	7.42	29.8	8.09	33.5	9.5	37.1	11.1
	37	18.9	4.77	22.5	5.92	26.2	7.19	28.0	7.88	29.8	8.60	33.5	10.1	37.1	11.8
	39	18.9	5.05	22.5	6.27	26.2	7.64	28.0	8.37	29.8	9.14	33.5	10.8	37.1	12.6
60 (210)	10	16.2	2.60	19.3	3.05	22.4	3.53	24.0	3.78	25.6	4.03	28.7	4.56	31.8	5.11
	12	16.2	2.63	19.3	3.09	22.4	3.59	24.0	3.84	25.6	4.10	28.7	4.64	31.8	5.20
	14	16.2	2.67	19.3	3.14	22.4	3.65	24.0	3.91	25.6	4.17	28.7	4.73	31.8	5.30
	16	16.2	2.71	19.3	3.19	22.4	3.71	24.0	3.97	25.6	4.25	28.7	4.81	31.8	5.40
	18	16.2	2.75	19.3	3.25	22.4	3.77	24.0	4.05	25.6	4.33	28.7	4.90	31.8	5.50
	20	16.2	2.80	19.3	3.30	22.4	3.84	24.0	4.12	25.6	4.41	28.7	5.00	31.8	5.61
	21	16.2	2.82	19.3	3.33	22.4	3.88	24.0	4.16	25.6	4.45	28.7	5.05	31.8	5.67
	23	16.2	2.87	19.3	3.39	22.4	3.95	24.0	4.24	25.6	4.53	28.7	5.25	31.8	6.03
	25	16.2	2.91	19.3	3.45	22.4	4.10	24.0	4.45	25.6	4.82	28.7	5.60	31.8	6.44
	27	16.2	3.02	19.3	3.66	22.4	4.36	24.0	4.74	25.6	5.14	28.7	5.97	31.8	6.87
	29	16.2	3.20	19.3	3.88	22.4	4.64	24.0	5.04	25.6	5.47	28.7	6.36	31.8	7.33
	31	16.2	3.39	19.3	4.12	22.4	4.93	24.0	5.36	25.6	5.81	28.7	6.77	31.8	7.81
	33	16.2	3.58	19.3	4.37	22.4	5.23	24.0	5.69	25.6	6.18	28.7	7.21	31.8	8.32
	35	16.2	3.79	19.3	4.63	22.4	5.55	24.0	6.05	25.6	6.56	28.7	7.66	31.8	8.85
	37	16.2	4.00	19.3	4.90	22.4	5.89	24.0	6.42	25.6	6.97	28.7	8.15	31.8	9.4
	39	16.2	4.23	19.3	5.18	22.4	6.24	24.0	6.81	25.6	7.40	28.7	8.66	31.8	10.0
50 (175)	10	13.5	2.23	16.1	2.58	18.7	2.96	20.0	3.15	21.3	3.35	23.9	3.76	26.5	4.19
	12	13.5	2.26	16.1	2.62	18.7	3.00	20.0	3.20	21.3	3.40	23.9	3.82	26.5	4.26
	14	13.5	2.29	16.1	2.66	18.7	3.05	20.0	3.25	21.3	3.46	23.9	3.89	26.5	4.34
	16	13.5	2.32	16.1	2.70	18.7	3.10	20.0	3.30	21.3	3.52	23.9	3.96	26.5	4.42
	18	13.5	2.35	16.1	2.74	18.7	3.15	20.0	3.36	21.3	3.58	23.9	4.03	26.5	4.50
	20	13.5	2.39	16.1	2.78	18.7	3.20	20.0	3.42	21.3	3.64	23.9	4.10	26.5	4.58
	21	13.5	2.41	16.1	2.80	18.7	3.23	20.0	3.45	21.3	3.67	23.9	4.14	26.5	4.63
	23	13.5	2.44	16.1	2.85	18.7	3.28	20.0	3.51	21.3	3.74	23.9	4.22	26.5	4.73
	25	13.5	2.48	16.1	2.90	18.7	3.34	20.0	3.58	21.3	3.85	23.9	4.43	26.5	5.05
	27	13.5	2.52	16.1	3.00	18.7	3.53	20.0	3.81	21.3	4.10	23.9	4.72	26.5	5.38
	29	13.5	2.66	16.1	3.18	18.7	3.74	20.0	4.04	21.3	4.36	23.9	5.02	26.5	5.73
	31	13.5	2.81	16.1	3.36	18.7	3.97	20.0	4.29	21.3	4.62	23.9	5.33	26.5	6.09
	33	13.5	2.97	16.1	3.56	18.7	4.20	20.0	4.55	21.3	4.91	23.9	5.66	26.5	6.48
	35	13.5	3.14	16.1	3.76	18.7	4.45	20.0	4.82	21.3	5.20	23.9	6.01	26.5	6.89
	37	13.5	3.31	16.1	3.98	18.7	4.71	20.0	5.10	21.3	5.51	23.9	6.38	26.5	7.31
	39	13.5	3.49	16.1	4.20	18.7	4.99	20.0	5.41	21.3	5.84	23.9	6.77	26.5	7.77

TC Total capacity ; kW
PI Power Input ; kW(Comp.+Outdoor fan motor)
Note1: The above table shows the average value of conditions which may occur.

RXQ16PY1 [50Hz]

Cooling capacity

Combination(%) (Capacity index)	Outdoor air temp. °CDB	Indoor air temp. 14.0°CWB TC kW	14.0°CWB PI kW	16.0°CWB TC kW	16.0°CWB PI kW	18.0°CWB TC kW	18.0°CWB PI kW	19.0°CWB TC kW	19.0°CWB PI kW	20.0°CWB TC kW	20.0°CWB PI kW	22.0°CWB TC kW	22.0°CWB PI kW	24.0°CWB TC kW	24.0°CWB PI kW
130 (520)	10	39.5	6.54	47.1	8.00	54.7	9.5	56.7	9.7	57.4	9.5	58.8	9.1	60.2	8.71
	12	39.5	6.66	47.1	8.15	54.7	9.7	55.9	9.7	56.7	9.5	58.1	9.1	59.5	8.9
	14	39.5	6.78	47.1	8.31	54.5	9.8	55.2	9.6	55.9	9.4	57.3	9.3	58.8	9.4
	16	39.5	6.92	47.1	8.47	53.8	9.8	54.5	9.7	55.2	9.7	56.6	9.8	58.0	9.9
	18	39.5	7.05	47.1	8.64	53.0	10.1	53.7	10.2	54.5	10.2	55.9	10.3	57.3	10.4
	20	39.5	7.19	47.1	9.2	52.3	10.6	53.0	10.7	53.7	10.7	55.2	10.9	56.6	11.0
	21	39.5	7.39	47.1	9.5	51.9	10.9	52.7	10.9	53.4	11.0	54.8	11.1	56.2	11.2
	23	39.5	7.92	47.1	10.2	51.2	11.4	51.9	11.4	52.6	11.5	54.1	11.6	55.5	11.7
	25	39.5	8.46	47.1	10.9	50.5	11.9	51.2	11.9	51.9	12.0	53.3	12.1	54.7	12.3
	27	39.5	9.0	47.1	11.7	49.7	12.4	50.5	12.5	51.2	12.5	52.6	12.6	54.0	12.8
	29	39.5	9.7	47.1	12.5	49.0	12.9	49.7	13.0	50.4	13.0	51.9	13.2	53.3	13.3
	31	39.5	10.3	46.9	13.2	48.3	13.4	49.0	13.5	49.7	13.5	51.1	13.7	52.5	13.8
	33	39.5	11.0	46.1	13.7	47.5	13.9	48.3	14.0	49.0	14.1	50.4	14.2	51.8	14.4
	35	39.5	11.7	45.4	14.2	46.8	14.4	47.5	14.5	48.2	14.6	49.7	14.7	51.1	14.9
	37	39.5	12.4	44.7	14.7	46.1	14.9	46.8	15.0	47.5	15.1	48.9	15.3	50.4	15.4
	39	39.5	13.2	43.9	15.3	45.4	15.4	46.1	15.5	46.8	15.6	48.2	15.8	49.6	16.0
120 (480)	10	36.4	5.97	43.5	7.30	50.5	8.68	54.0	9.4	56.5	9.8	57.8	9.4	59.1	9.0
	12	36.4	6.08	43.5	7.43	50.5	8.84	54.0	9.6	55.8	9.7	57.1	9.4	58.4	9.0
	14	36.4	6.20	43.5	7.58	50.5	9.0	54.0	9.7	55.0	9.7	56.3	9.3	57.7	9.4
	16	36.4	6.31	43.5	7.72	50.5	9.2	53.6	9.8	54.3	9.7	55.6	9.8	56.9	9.9
	18	36.4	6.44	43.5	7.88	50.5	9.5	52.9	10.1	53.6	10.2	54.9	10.3	56.2	10.4
	20	36.4	6.56	43.5	8.19	50.5	10.2	52.2	10.6	52.8	10.7	54.1	10.8	55.5	10.9
	21	36.4	6.63	43.5	8.48	50.5	10.6	51.8	10.9	52.5	10.9	53.8	11.0	55.1	11.1
	23	36.4	7.08	43.5	9.1	50.4	11.3	51.1	11.4	51.7	11.4	53.0	11.5	54.4	11.6
	25	36.4	7.56	43.5	9.7	49.7	11.8	50.3	11.9	51.0	11.9	52.3	12.0	53.6	12.2
	27	36.4	8.08	43.5	10.4	49.0	12.3	49.6	12.4	50.3	12.4	51.6	12.6	52.9	12.7
	29	36.4	8.61	43.5	11.1	48.2	12.8	48.9	12.9	49.5	12.9	50.9	13.1	52.2	13.2
	31	36.4	9.2	43.5	11.9	47.5	13.3	48.1	13.4	48.8	13.4	50.1	13.6	51.4	13.7
	33	36.4	9.8	43.5	12.6	46.8	13.8	47.4	13.9	48.1	14.0	49.4	14.1	50.7	14.2
	35	36.4	10.4	43.5	13.5	46.0	14.3	46.7	14.4	47.3	14.5	48.7	14.6	50.0	14.8
	37	36.4	11.1	43.5	14.4	45.3	14.8	46.0	14.9	46.6	15.0	47.9	15.1	49.2	15.3
	39	36.4	11.8	43.2	15.2	44.6	15.3	45.2	15.4	45.9	15.5	47.2	15.7	48.5	15.8
110 (440)	10	33.4	5.43	39.8	6.61	46.3	7.85	49.5	8.48	52.7	9.1	56.8	9.7	58.0	9.3
	12	33.4	5.52	39.8	6.73	46.3	7.99	49.5	8.64	52.7	9.3	56.1	9.6	57.3	9.3
	14	33.4	5.62	39.8	6.86	46.3	8.15	49.5	8.81	52.7	9.5	55.3	9.6	56.5	9.3
	16	33.4	5.73	39.8	6.99	46.3	8.31	49.5	9.0	52.7	9.7	54.6	9.7	55.8	9.8
	18	33.4	5.84	39.8	7.13	46.3	8.47	49.5	9.2	52.7	10.1	53.9	10.2	55.1	10.3
	20	33.4	5.95	39.8	7.27	46.3	9.0	49.5	9.9	51.9	10.6	53.1	10.7	54.3	10.8
	21	33.4	6.01	39.8	7.49	46.3	9.3	49.5	10.3	51.6	10.9	52.8	11.0	54.0	11.0
	23	33.4	6.29	39.8	8.02	46.3	10.0	49.5	11.0	50.8	11.4	52.0	11.5	53.2	11.6
	25	33.4	6.72	39.8	8.58	46.3	10.7	49.5	11.8	50.1	11.9	51.3	12.0	52.5	12.1
	27	33.4	7.17	39.8	9.2	46.3	11.4	48.8	12.3	49.4	12.4	50.6	12.5	51.8	12.6
	29	33.4	7.64	39.8	9.8	46.3	12.2	48.0	12.8	48.6	12.9	49.8	13.0	51.0	13.1
	31	33.4	8.13	39.8	10.4	46.3	13.0	47.3	13.3	47.9	13.4	49.1	13.5	50.3	13.6
	33	33.4	8.66	39.8	11.1	46.0	13.7	46.6	13.8	47.2	13.9	48.4	14.0	49.6	14.1
	35	33.4	9.2	39.8	11.8	45.2	14.2	45.8	14.3	46.4	14.4	47.6	14.5	48.9	14.6
	37	33.4	9.8	39.8	12.6	44.5	14.7	45.1	14.8	45.7	14.9	46.9	15.0	48.1	15.2
	39	33.4	10.4	39.8	13.4	43.8	15.2	44.4	15.3	45.0	15.4	46.2	15.5	47.4	15.7
100 (400)	10	30.4	4.89	36.2	5.93	42.1	7.03	45.0	7.60	47.9	8.17	53.8	9.3	56.9	9.7
	12	30.4	4.98	36.2	6.04	42.1	7.16	45.0	7.74	47.9	8.32	53.8	9.5	56.2	9.6
	14	30.4	5.07	36.2	6.15	42.1	7.30	45.0	7.89	47.9	8.48	53.8	9.7	55.4	9.6
	16	30.4	5.16	36.2	6.27	42.1	7.44	45.0	8.04	47.9	8.65	53.6	9.8	54.7	9.7
	18	30.4	5.26	36.2	6.39	42.1	7.59	45.0	8.20	47.9	8.82	52.9	10.1	54.0	10.2
	20	30.4	5.36	36.2	6.52	42.1	7.81	45.0	8.61	47.9	9.4	52.1	10.6	53.2	10.7
	21	30.4	5.41	36.2	6.58	42.1	8.09	45.0	8.9	47.9	9.8	51.8	10.9	52.9	11.0
	23	30.4	5.55	36.2	7.02	42.1	8.67	45.0	9.6	47.9	10.5	51.0	11.4	52.1	11.5
	25	30.4	5.92	36.2	7.50	42.1	9.3	45.0	10.2	47.9	11.2	50.3	11.9	51.4	12.0
	27	30.4	6.31	36.2	8.01	42.1	9.9	45.0	10.9	47.9	12.0	49.6	12.4	50.7	12.5
	29	30.4	6.72	36.2	8.54	42.1	10.6	45.0	11.7	47.7	12.8	48.8	12.9	49.9	13.0
	31	30.4	7.15	36.2	9.1	42.1	11.3	45.0	12.5	47.0	13.3	48.1	13.4	49.2	13.5
	33	30.4	7.60	36.2	9.7	42.1	12.0	45.0	13.3	46.3	13.8	47.4	13.9	48.5	14.0
	35	30.4	8.08	36.2	10.3	42.1	12.8	45.0	14.2	45.5	14.3	46.6	14.4	47.7	14.5
	37	30.4	8.59	36.2	11.0	42.1	13.7	44.3	14.7	44.8	14.8	45.9	14.9	47.0	15.0
	39	30.4	9.1	36.2	11.7	42.1	14.6	43.5	15.2	44.1	15.3	45.2	15.4	46.3	15.6

Cooling capacity

Combination(%) (Capacity index)	Outdoor air temp. °CDB	Indoor air temp. 14.0°CWB TC kW	14.0°CWB PI kW	16.0°CWB TC kW	16.0°CWB PI kW	18.0°CWB TC kW	18.0°CWB PI kW	19.0°CWB TC kW	19.0°CWB PI kW	20.0°CWB TC kW	20.0°CWB PI kW	22.0°CWB TC kW	22.0°CWB PI kW	24.0°CWB TC kW	24.0°CWB PI kW
90 (360)	10	27.3	4.38	32.6	5.28	37.9	6.24	40.5	6.73	43.1	7.23	48.4	8.26	53.7	9.3
	12	27.3	4.45	32.6	5.38	37.9	6.35	40.5	6.86	43.1	7.37	48.4	8.42	53.7	9.5
	14	27.3	4.53	32.6	5.47	37.9	6.47	40.5	6.99	43.1	7.51	48.4	8.58	53.7	9.7
	16	27.3	4.61	32.6	5.57	37.9	6.59	40.5	7.12	43.1	7.66	48.4	8.75	53.6	9.8
	18	27.3	4.69	32.6	5.68	37.9	6.72	40.5	7.26	43.1	7.81	48.4	8.9	52.8	10.1
	20	27.3	4.78	32.6	5.79	37.9	6.86	40.5	7.41	43.1	8.10	48.4	9.6	52.1	10.6
	21	27.3	4.82	32.6	5.85	37.9	6.97	40.5	7.66	43.1	8.39	48.4	9.9	51.7	10.9
	23	27.3	4.92	32.6	6.09	37.9	7.46	40.5	8.21	43.1	9.0	48.4	10.7	51.0	11.4
	25	27.3	5.18	32.6	6.50	37.9	7.98	40.5	8.78	43.1	9.6	48.4	11.4	50.3	11.9
	27	27.3	5.51	32.6	6.93	37.9	8.52	40.5	9.4	43.1	10.3	48.4	12.2	49.5	12.4
	29	27.3	5.87	32.6	7.39	37.9	9.1	40.5	10.0	43.1	11.0	47.8	12.8	48.8	12.9
	31	27.3	6.24	32.6	7.87	37.9	9.7	40.5	10.7	43.1	11.7	47.1	13.3	48.1	13.4
	33	27.3	6.62	32.6	8.37	37.9	10.3	40.5	11.4	43.1	12.5	46.4	13.8	47.4	13.9
	35	27.3	7.03	32.6	8.9	37.9	11.0	40.5	12.1	43.1	13.3	45.6	14.3	46.6	14.4
	37	27.3	7.46	32.6	9.5	37.9	11.7	40.5	12.9	43.1	14.2	44.9	14.8	45.9	14.9
	39	27.3	7.92	32.6	10.1	37.9	12.5	40.5	13.8	43.1	15.1	44.2	15.3	45.2	15.4
80 (320)	10	24.3	3.89	29.0	4.66	33.7	5.47	36.0	5.89	38.3	6.32	43.0	7.21	47.7	8.13
	12	24.3	3.95	29.0	4.74	33.7	5.57	36.0	6.00	38.3	6.44	43.0	7.35	47.7	8.28
	14	24.3	4.02	29.0	4.82	33.7	5.67	36.0	6.11	38.3	6.56	43.0	7.49	47.7	8.44
	16	24.3	4.08	29.0	4.91	33.7	5.78	36.0	6.23	38.3	6.69	43.0	7.63	47.7	8.60
	18	24.3	4.15	29.0	5.00	33.7	5.89	36.0	6.35	38.3	6.82	43.0	7.78	47.7	8.77
	20	24.3	4.23	29.0	5.09	33.7	6.00	36.0	6.47	38.3	6.95	43.0	8.07	47.7	9.4
	21	24.3	4.27	29.0	5.14	33.7	6.06	36.0	6.54	38.3	7.10	43.0	8.36	47.7	9.7
	23	24.3	4.34	29.0	5.24	33.7	6.35	36.0	6.96	38.3	7.60	43.0	9.0	47.7	10.4
	25	24.3	4.49	29.0	5.57	33.7	6.79	36.0	7.44	38.3	8.12	43.0	9.6	47.7	11.2
	27	24.3	4.77	29.0	5.94	33.7	7.24	36.0	7.94	38.3	8.67	43.0	10.2	47.7	11.9
	29	24.3	5.07	29.0	6.32	33.7	7.72	36.0	8.47	38.3	9.3	43.0	10.9	47.7	12.8
	31	24.3	5.38	29.0	6.72	33.7	8.22	36.0	9.0	38.3	9.9	43.0	11.7	47.0	13.3
	33	24.3	5.71	29.0	7.15	33.7	8.75	36.0	9.6	38.3	10.5	43.0	12.4	46.2	13.8
	35	24.3	6.06	29.0	7.59	33.7	9.3	36.0	10.2	38.3	11.2	43.0	13.3	45.5	14.3
	37	24.3	6.42	29.0	8.06	33.7	9.9	36.0	10.9	38.3	11.9	43.0	14.1	44.8	14.8
	39	24.3	6.81	29.0	8.56	33.7	10.5	36.0	11.6	38.3	12.7	43.0	15.1	44.0	15.3
70 (280)	10	21.3	3.42	25.4	4.06	29.5	4.74	31.5	5.09	33.5	5.45	37.6	6.20	41.7	6.97
	12	21.3	3.47	25.4	4.12	29.5	4.82	31.5	5.18	33.5	5.55	37.6	6.31	41.7	7.10
	14	21.3	3.53	25.4	4.19	29.5	4.90	31.5	5.27	33.5	5.65	37.6	6.43	41.7	7.23
	16	21.3	3.58	25.4	4.26	29.5	4.99	31.5	5.37	33.5	5.75	37.6	6.55	41.7	7.37
	18	21.3	3.64	25.4	4.34	29.5	5.08	31.5	5.47	33.5	5.86	37.6	6.68	41.7	7.52
	20	21.3	3.70	25.4	4.42	29.5	5.18	31.5	5.57	33.5	5.98	37.6	6.81	41.7	7.73
	21	21.3	3.73	25.4	4.46	29.5	5.23	31.5	5.63	33.5	6.04	37.6	6.92	41.7	8.00
	23	21.3	3.80	25.4	4.54	29.5	5.34	31.5	5.82	33.5	6.33	37.6	7.40	41.7	8.57
	25	21.3	3.87	25.4	4.72	29.5	5.69	31.5	6.21	33.5	6.76	37.6	7.91	41.7	9.2
	27	21.3	4.09	25.4	5.02	29.5	6.06	31.5	6.62	33.5	7.21	37.6	8.45	41.7	9.8
	29	21.3	4.34	25.4	5.34	29.5	6.46	31.5	7.05	33.5	7.68	37.6	9.0	41.7	10.5
	31	21.3	4.60	25.4	5.67	29.5	6.87	31.5	7.51	33.5	8.18	37.6	9.6	41.7	11.2
	33	21.3	4.87	25.4	6.02	29.5	7.30	31.5	7.99	33.5	8.71	37.6	10.2	41.7	11.9
	35	21.3	5.16	25.4	6.39	29.5	7.76	31.5	8.49	33.5	9.3	37.6	10.9	41.7	12.7
	37	21.3	5.46	25.4	6.78	29.5	8.24	31.5	9.0	33.5	9.8	37.6	11.6	41.7	13.5
	39	21.3	5.78	25.4	7.18	29.5	8.75	31.5	9.6	33.5	10.5	37.6	12.4	41.7	14.4
60 (240)	10	18.2	2.97	21.7	3.49	25.2	4.04	27.0	4.33	28.8	4.62	32.3	5.22	35.8	5.85
	12	18.2	3.02	21.7	3.54	25.2	4.11	27.0	4.40	28.8	4.70	32.3	5.32	35.8	5.96
	14	18.2	3.06	21.7	3.60	25.2	4.17	27.0	4.47	28.8	4.78	32.3	5.41	35.8	6.07
	16	18.2	3.11	21.7	3.66	25.2	4.25	27.0	4.55	28.8	4.87	32.3	5.51	35.8	6.18
	18	18.2	3.15	21.7	3.72	25.2	4.32	27.0	4.63	28.8	4.95	32.3	5.62	35.8	6.30
	20	18.2	3.20	21.7	3.78	25.2	4.40	27.0	4.72	28.8	5.05	32.3	5.72	35.8	6.43
	21	18.2	3.23	21.7	3.81	25.2	4.44	27.0	4.76	28.8	5.09	32.3	5.78	35.8	6.49
	23	18.2	3.28	21.7	3.88	25.2	4.52	27.0	4.85	28.8	5.19	32.3	6.01	35.8	6.90
	25	18.2	3.34	21.7	3.95	25.2	4.70	27.0	5.10	28.8	5.52	32.3	6.41	35.8	7.37
	27	18.2	3.46	21.7	4.19	25.2	5.00	27.0	5.43	28.8	5.88	32.3	6.84	35.8	7.87
	29	18.2	3.66	21.7	4.45	25.2	5.31	27.0	5.78	28.8	6.26	32.3	7.29	35.8	8.39
	31	18.2	3.88	21.7	4.72	25.2	5.64	27.0	6.14	28.8	6.66	32.3	7.76	35.8	8.9
	33	18.2	4.10	21.7	5.00	25.2	5.99	27.0	6.52	28.8	7.07	32.3	8.25	35.8	9.5
	35	18.2	4.34	21.7	5.30	25.2	6.36	27.0	6.92	28.8	7.52	32.3	8.78	35.8	10.1
	37	18.2	4.59	21.7	5.61	25.2	6.74	27.0	7.35	28.8	7.98	32.3	9.3	35.8	10.8
	39	18.2	4.84	21.7	5.94	25.2	7.14	27.0	7.79	28.8	8.47	32.3	9.9	35.8	11.5
50 (200)	10	15.2	2.56	18.1	2.96	21.0	3.39	22.5	3.61	24.0	3.84	26.9	4.31	29.8	4.80
	12	15.2	2.59	18.1	3.00	21.0	3.44	22.5	3.66	24.0	3.90	26.9	4.38	29.8	4.88
	14	15.2	2.62	18.1	3.04	21.0	3.49	22.5	3.72	24.0	3.96	26.9	4.45	29.8	4.97
	16	15.2	2.66	18.1	3.09	21.0	3.55	22.5	3.78	24.0	4.03	26.9	4.53	29.8	5.06
	18	15.2	2.70	18.1	3.14	21.0	3.60	22.5	3.85	24.0	4.10	26.9	4.61	29.8	5.15
	20	15.2	2.73	18.1	3.19	21.0	3.66	22.5	3.91	24.0	4.17	26.9	4.70	29.8	5.25
	21	15.2	2.75	18.1	3.21	21.0	3.70	22.5	3.95	24.0	4.21	26.9	4.74	29.8	5.30
	23	15.2	2.80	18.1	3.26	21.0	3.76	22.5	4.02	24.0	4.28	26.9	4.83	29.8	5.42
	25	15.2	2.84	18.1	3.32	21.0	3.83	22.5	4.10	24.0	4.41	26.9	5.07	29.8	5.78
	27	15.2	2.88	18.1	3.44	21.0	4.04	22.5	4.36	24.0	4.69	26.9	5.40	29.8	6.16
	29	15.2	3.05	18.1	3.64	21.0	4.29	22.5	4.63	24.0	4.99	26.9	5.75	29.8	6.56
	31	15.2	3.22	18.1	3.85	21.0	4.54	22.5	4.91	24.0	5.30	26.9	6.11	29.8	6.98
	33	15.2	3.40	18.1	4.08	21.0	4.81	22.5	5.21	24.0	5.62	26.9	6.49	29.8	7.42
	35	15.2	3.59	18.1	4.31	21.0	5.10	22.5	5.52	24.0	5.96	26.9	6.89	29.8	7.89
	37	15.2	3.79	18.1	4.55	21.0	5.40	22.5	5.85	24.0	6.31	26.9	7.31	29.8	8.38
	39	15.2	3.99	18.1	4.81	21.0	5.71	22.5	6.19	24.0	6.69	26.9	7.75	29.8	8.9

TC Total capacity ; kW
PI Power Input ; kW(Comp.+Outdoor fan motor)
Note1: The above table shows the average value of conditions which may occur.

RXQ18PY1 [50Hz]

Cooling capacity

Combination(%) (Capacity index)	Outdoor air temp. °CDB	Indoor air temp. 14.0°CWB TC kW	14.0°CWB PI kW	16.0°CWB TC kW	16.0°CWB PI kW	18.0°CWB TC kW	18.0°CWB PI kW	19.0°CWB TC kW	19.0°CWB PI kW	20.0°CWB TC kW	20.0°CWB PI kW	22.0°CWB TC kW	22.0°CWB PI kW	24.0°CWB TC kW	24.0°CWB PI kW
130 (585)	10	43.0	7.55	51.3	9.24	59.6	11.0	61.7	11.2	62.5	11.0	64.0	10.53	65.6	10.06
	12	43.0	7.69	51.3	9.42	59.6	11.2	60.9	11.2	61.7	10.9	63.2	10.46	64.8	10.30
	14	43.0	7.84	51.3	9.60	59.3	11.3	60.1	11.1	60.9	10.9	62.4	10.8	64.0	10.9
	16	43.0	7.99	51.3	9.79	58.5	11.3	59.3	11.2	60.1	11.3	61.6	11.4	63.2	11.5
	18	43.0	8.14	51.3	9.98	57.8	11.7	58.5	11.8	59.3	11.8	60.9	12.0	62.4	12.1
	20	43.0	8.31	51.3	10.63	57.0	12.3	57.7	12.4	58.5	12.4	60.1	12.5	61.6	12.7
	21	43.0	8.54	51.3	11.0	56.6	12.6	57.3	12.6	58.1	12.7	59.7	12.8	61.2	13.0
	23	43.0	9.14	51.3	11.8	55.8	13.2	56.5	13.2	57.3	13.3	58.9	13.4	60.4	13.6
	25	43.0	9.78	51.3	12.6	55.0	13.7	55.7	13.8	56.5	13.9	58.1	14.0	59.6	14.2
	27	43.0	10.44	51.3	13.5	54.2	14.3	54.9	14.4	55.7	14.5	57.3	14.6	58.8	14.8
	29	43.0	11.1	51.3	14.5	53.4	14.9	54.1	15.0	54.9	15.0	56.5	15.2	58.0	15.4
	31	43.0	11.9	51.0	15.3	52.6	15.5	53.3	15.6	54.1	15.6	55.7	15.8	57.2	16.0
	33	43.0	12.7	50.2	15.9	51.8	16.1	52.5	16.1	53.3	16.2	54.9	16.4	56.4	16.6
	35	43.0	13.5	49.4	16.5	51.0	16.6	51.8	16.7	52.5	16.8	54.1	17.0	55.6	17.2
	37	43.0	14.4	48.6	17.0	50.2	17.2	51.0	17.3	51.7	17.4	53.3	17.6	54.8	17.8
	39	43.0	15.3	47.8	17.6	49.4	17.8	50.2	17.9	50.9	18.0	52.5	18.2	54.0	18.5
120 (540)	10	39.7	6.90	47.3	8.43	55.0	10.02	58.8	10.8	61.5	11.3	62.9	10.9	64.4	10.43
	12	39.7	7.03	47.3	8.59	55.0	10.21	58.8	11.0	60.7	11.2	62.1	10.8	63.6	10.36
	14	39.7	7.16	47.3	8.75	55.0	10.41	58.8	11.2	59.9	11.2	61.3	10.7	62.8	10.8
	16	39.7	7.29	47.3	8.92	55.0	10.61	58.4	11.3	59.1	11.2	60.6	11.3	62.0	11.4
	18	39.7	7.43	47.3	9.10	55.0	11.0	57.6	11.7	58.3	11.8	59.8	11.9	61.2	12.0
	20	39.7	7.58	47.3	9.46	55.0	11.8	56.8	12.3	57.5	12.3	59.0	12.5	60.4	12.6
	21	39.7	7.66	47.3	9.79	55.0	12.2	56.4	12.6	57.1	12.6	58.6	12.7	60.0	12.9
	23	39.7	8.18	47.3	10.49	54.9	13.1	55.6	13.1	56.3	13.2	57.8	13.3	59.2	13.4
	25	39.7	8.74	47.3	11.2	54.1	13.6	54.8	13.7	55.5	13.8	57.0	13.9	58.4	14.0
	27	39.7	9.33	47.3	12.0	53.3	14.2	54.0	14.3	54.7	14.4	56.2	14.5	57.6	14.6
	29	39.7	9.95	47.3	12.8	52.5	14.8	53.2	14.9	53.9	14.9	55.4	15.1	56.8	15.2
	31	39.7	10.60	47.3	13.7	51.7	15.4	52.4	15.5	53.1	15.5	54.6	15.7	56.0	15.8
	33	39.7	11.3	47.3	14.6	50.9	16.0	51.6	16.0	52.3	16.1	53.8	16.3	55.2	16.4
	35	39.7	12.0	47.3	15.6	50.1	16.5	50.8	16.6	51.5	16.7	53.0	16.9	54.4	17.1
	37	39.7	12.8	47.3	16.6	49.3	17.1	50.0	17.2	50.8	17.3	52.2	17.5	53.6	17.7
	39	39.7	13.6	47.1	17.5	48.5	17.7	49.2	17.8	50.0	17.9	51.4	18.1	52.8	18.3
110 (495)	10	36.4	6.27	43.4	7.63	50.4	9.06	53.9	9.79	57.4	10.54	61.8	11.2	63.2	10.8
	12	36.4	6.38	43.4	7.77	50.4	9.23	53.9	9.98	57.4	10.7	61.1	11.1	62.4	10.7
	14	36.4	6.49	43.4	7.92	50.4	9.41	53.9	10.17	57.4	10.9	60.3	11.1	61.6	10.7
	16	36.4	6.62	43.4	8.07	50.4	9.59	53.9	10.37	57.4	11.2	59.5	11.2	60.8	11.3
	18	36.4	6.74	43.4	8.23	50.4	9.78	53.9	10.65	57.3	11.7	58.7	11.8	60.0	11.9
	20	36.4	6.87	43.4	8.39	50.4	10.36	53.9	11.5	56.6	12.3	57.9	12.4	59.2	12.5
	21	36.4	6.94	43.4	8.65	50.4	10.7	53.9	11.9	56.2	12.5	57.5	12.7	58.8	12.8
	23	36.4	7.26	43.4	9.26	50.4	11.5	53.9	12.7	55.4	13.1	56.7	13.2	58.0	13.3
	25	36.4	7.76	43.4	9.90	50.4	12.3	53.9	13.6	54.6	13.7	55.9	13.8	57.2	13.9
	27	36.4	8.28	43.4	10.58	50.4	13.2	53.1	14.2	53.8	14.3	55.1	14.4	56.4	14.5
	29	36.4	8.82	43.4	11.3	50.4	14.1	52.3	14.8	53.0	14.8	54.3	15.0	55.6	15.1
	31	36.4	9.39	43.4	12.0	50.4	15.0	51.5	15.4	52.2	15.4	53.5	15.6	54.8	15.7
	33	36.4	10.00	43.4	12.8	50.1	15.9	50.7	15.9	51.4	16.0	52.7	16.2	54.0	16.3
	35	36.4	10.63	43.4	13.7	49.3	16.4	49.9	16.5	50.6	16.6	51.9	16.8	53.2	16.9
	37	36.4	11.3	43.4	14.6	48.5	17.0	49.1	17.1	49.8	17.2	51.1	17.3	52.4	17.5
	39	36.4	12.0	43.4	15.5	47.7	17.6	48.3	17.7	49.0	17.8	50.3	17.9	51.6	18.1
100 (450)	10	33.1	5.65	39.4	6.85	45.8	8.12	49.0	8.77	52.2	9.43	58.6	10.8	61.9	11.2
	12	33.1	5.75	39.4	6.98	45.8	8.27	49.0	8.94	52.2	9.61	58.6	11.0	61.1	11.1
	14	33.1	5.85	39.4	7.11	45.8	8.43	49.0	9.11	52.2	9.80	58.6	11.2	60.4	11.0
	16	33.1	5.96	39.4	7.24	45.8	8.59	49.0	9.29	52.2	9.99	58.4	11.3	59.6	11.2
	18	33.1	6.07	39.4	7.38	45.8	8.76	49.0	9.47	52.2	10.19	57.6	11.7	58.8	11.8
	20	33.1	6.18	39.4	7.53	45.8	9.03	49.0	9.95	52.2	10.9	56.8	12.3	58.0	12.4
	21	33.1	6.24	39.4	7.60	45.8	9.35	49.0	10.30	52.2	11.3	56.4	12.6	57.6	12.7
	23	33.1	6.41	39.4	8.11	45.8	10.01	49.0	11.0	52.2	12.1	55.6	13.1	56.8	13.2
	25	33.1	6.84	39.4	8.66	45.8	10.71	49.0	11.8	52.2	13.0	54.8	13.7	56.0	13.8
	27	33.1	7.29	39.4	9.25	45.8	11.4	49.0	12.6	52.2	13.9	54.0	14.3	55.2	14.4
	29	33.1	7.76	39.4	9.86	45.8	12.2	49.0	13.5	52.0	14.7	53.2	14.9	54.4	15.0
	31	33.1	8.26	39.4	10.51	45.8	13.0	49.0	14.4	51.2	15.3	52.4	15.4	53.6	15.6
	33	33.1	8.78	39.4	11.2	45.8	13.9	49.0	15.4	50.4	15.9	51.6	16.0	52.8	16.2
	35	33.1	9.33	39.4	11.9	45.8	14.8	49.0	16.4	49.6	16.5	50.8	16.6	52.0	16.8
	37	33.1	9.92	39.4	12.7	45.8	15.8	48.2	17.0	48.8	17.1	50.0	17.2	51.2	17.4
	39	33.1	10.53	39.4	13.5	45.8	16.8	47.4	17.6	48.0	17.6	49.2	17.8	50.4	18.0

Cooling capacity

Combination(%) (Capacity index)	Outdoor air temp. °CDB	Indoor air temp. 14.0°CWB TC kW	14.0°CWB PI kW	16.0°CWB TC kW	16.0°CWB PI kW	18.0°CWB TC kW	18.0°CWB PI kW	19.0°CWB TC kW	19.0°CWB PI kW	20.0°CWB TC kW	20.0°CWB PI kW	22.0°CWB TC kW	22.0°CWB PI kW	24.0°CWB TC kW	24.0°CWB PI kW
90 (405)	10	29.8	5.06	35.5	6.10	41.2	7.20	44.1	7.77	47.0	8.35	52.7	9.54	58.4	10.8
	12	29.8	5.14	35.5	6.21	41.2	7.34	44.1	7.92	47.0	8.51	52.7	9.72	58.4	11.0
	14	29.8	5.23	35.5	6.32	41.2	7.47	44.1	8.07	47.0	8.67	52.7	9.91	58.4	11.2
	16	29.8	5.32	35.5	6.44	41.2	7.62	44.1	8.22	47.0	8.84	52.7	10.10	58.3	11.4
	18	29.8	5.42	35.5	6.56	41.2	7.76	44.1	8.38	47.0	9.02	52.7	10.30	57.5	11.7
	20	29.8	5.52	35.5	6.69	41.2	7.92	44.1	8.55	47.0	9.35	52.7	11.1	56.7	12.3
	21	29.8	5.57	35.5	6.75	41.2	8.05	44.1	8.85	47.0	9.69	52.7	11.5	56.3	12.6
	23	29.8	5.68	35.5	7.03	41.2	8.62	44.1	9.48	47.0	10.38	52.7	12.3	55.5	13.1
	25	29.8	5.98	35.5	7.51	41.2	9.22	44.1	10.14	47.0	11.1	52.7	13.2	54.8	13.7
	27	29.8	6.37	35.5	8.01	41.2	9.84	44.1	10.8	47.0	11.9	52.7	14.1	54.0	14.3
	29	29.8	6.77	35.5	8.53	41.2	10.50	44.1	11.6	47.0	12.7	52.1	14.8	53.2	14.9
	31	29.8	7.20	35.5	9.08	41.2	11.2	44.1	12.3	47.0	13.5	51.3	15.3	52.4	15.4
	33	29.8	7.65	35.5	9.67	41.2	11.9	44.1	13.1	47.0	14.4	50.5	15.9	51.6	16.0
	35	29.8	8.12	35.5	10.28	41.2	12.7	44.1	14.0	47.0	15.4	49.7	16.5	50.8	16.6
	37	29.8	8.62	35.5	10.9	41.2	13.5	44.1	14.9	47.0	16.4	48.9	17.1	50.0	17.2
	39	29.8	9.15	35.5	11.6	41.2	14.4	44.1	15.9	47.0	17.5	48.1	17.7	49.2	17.8
80 (360)	10	26.5	4.49	31.6	5.38	36.7	6.32	39.2	6.81	41.7	7.30	46.8	8.33	51.9	9.38
	12	26.5	4.56	31.6	5.47	36.7	6.43	39.2	6.93	41.7	7.44	46.8	8.49	51.9	9.56
	14	26.5	4.64	31.6	5.57	36.7	6.55	39.2	7.06	41.7	7.58	46.8	8.65	51.9	9.74
	16	26.5	4.72	31.6	5.67	36.7	6.67	39.2	7.19	41.7	7.72	46.8	8.82	51.9	9.93
	18	26.5	4.80	31.6	5.77	36.7	6.80	39.2	7.33	41.7	7.87	46.8	8.99	51.9	10.13
	20	26.5	4.88	31.6	5.88	36.7	6.93	39.2	7.48	41.7	8.03	46.8	9.32	51.9	10.8
	21	26.5	4.93	31.6	5.93	36.7	7.00	39.2	7.55	41.7	8.20	46.8	9.65	51.9	11.2
	23	26.5	5.02	31.6	6.05	36.7	7.34	39.2	8.04	41.7	8.77	46.8	10.34	51.9	12.0
	25	26.5	5.18	31.6	6.44	36.7	7.84	39.2	8.59	41.7	9.38	46.8	11.1	51.9	12.9
	27	26.5	5.51	31.6	6.86	36.7	8.36	39.2	9.17	41.7	10.02	46.8	11.8	51.9	13.8
	29	26.5	5.86	31.6	7.30	36.7	8.91	39.2	9.78	41.7	10.69	46.8	12.6	51.9	14.7
	31	26.5	6.22	31.6	7.77	36.7	9.49	39.2	10.42	41.7	11.4	46.8	13.5	51.1	15.3
	33	26.5	6.60	31.6	8.25	36.7	10.10	39.2	11.1	41.7	12.1	46.8	14.4	50.3	15.9
	35	26.5	7.00	31.6	8.77	36.7	10.7	39.2	11.8	41.7	12.9	46.8	15.3	49.6	16.5
	37	26.5	7.42	31.6	9.31	36.7	11.4	39.2	12.6	41.7	13.8	46.8	16.3	48.8	17.0
	39	26.5	7.86	31.6	9.88	36.7	12.1	39.2	13.4	41.7	14.7	46.8	17.4	48.0	17.6
70 (315)	10	23.1	3.95	27.6	4.69	32.1	5.47	34.3	5.88	36.5	6.29	41.0	7.16	45.5	8.05
	12	23.1	4.01	27.6	4.76	32.1	5.56	34.3	5.98	36.5	6.41	41.0	7.29	45.5	8.20
	14	23.1	4.07	27.6	4.84	32.1	5.66	34.3	6.09	36.5	6.52	41.0	7.42	45.5	8.35
	16	23.1	4.14	27.6	4.93	32.1	5.76	34.3	6.20	36.5	6.65	41.0	7.56	45.5	8.51
	18	23.1	4.20	27.6	5.01	32.1	5.87	34.3	6.32	36.5	6.77	41.0	7.71	45.5	8.68
	20	23.1	4.27	27.6	5.10	32.1	5.98	34.3	6.44	36.5	6.90	41.0	7.87	45.5	8.92
	21	23.1	4.31	27.6	5.15	32.1	6.04	34.3	6.50	36.5	6.97	41.0	7.99	45.5	9.24
	23	23.1	4.39	27.6	5.24	32.1	6.16	34.3	6.72	36.5	7.31	41.0	8.55	45.5	9.90
	25	23.1	4.47	27.6	5.45	32.1	6.57	34.3	7.17	36.5	7.80	41.0	9.14	45.5	10.59
	27	23.1	4.72	27.6	5.80	32.1	7.00	34.3	7.65	36.5	8.32	41.0	9.76	45.5	11.3
	29	23.1	5.01	27.6	6.17	32.1	7.46	34.3	8.15	36.5	8.87	41.0	10.41	45.5	12.1
	31	23.1	5.31	27.6	6.55	32.1	7.93	34.3	8.67	36.5	9.45	41.0	11.1	45.5	12.9
	33	23.1	5.63	27.6	6.96	32.1	8.43	34.3	9.23	36.5	10.06	41.0	11.8	45.5	13.7
	35	23.1	5.96	27.6	7.38	32.1	8.96	34.3	9.81	36.5	10.70	41.0	12.6	45.5	14.7
	37	23.1	6.31	27.6	7.83	32.1	9.52	34.3	10.42	36.5	11.4	41.0	13.4	45.5	15.6
	39	23.1	6.68	27.6	8.30	32.1	10.10	34.3	11.1	36.5	12.1	41.0	14.3	45.5	16.6
60 (270)	10	19.8	3.43	23.7	4.03	27.5	4.67	29.4	5.00	31.3	5.33	35.1	6.03	39.0	6.76
	12	19.8	3.48	23.7	4.09	27.5	4.74	29.4	5.08	31.3	5.42	35.1	6.14	39.0	6.88
	14	19.8	3.53	23.7	4.16	27.5	4.82	29.4	5.17	31.3	5.52	35.1	6.25	39.0	7.01
	16	19.8	3.59	23.7	4.23	27.5	4.90	29.4	5.26	31.3	5.62	35.1	6.37	39.0	7.14
	18	19.8	3.64	23.7	4.30	27.5	4.99	29.4	5.35	31.3	5.72	35.1	6.49	39.0	7.28
	20	19.8	3.70	23.7	4.37	27.5	5.08	29.4	5.45	31.3	5.83	35.1	6.61	39.0	7.42
	21	19.8	3.73	23.7	4.41	27.5	5.13	29.4	5.50	31.3	5.88	35.1	6.68	39.0	7.50
	23	19.8	3.79	23.7	4.48	27.5	5.22	29.4	5.60	31.3	6.00	35.1	6.94	39.0	7.97
	25	19.8	3.85	23.7	4.56	27.5	5.42	29.4	5.89	31.3	6.38	35.1	7.41	39.0	8.52
	27	19.8	3.99	23.7	4.84	27.5	5.77	29.4	6.27	31.3	6.79	35.1	7.90	39.0	9.09
	29	19.8	4.23	23.7	5.14	27.5	6.14	29.4	6.67	31.3	7.23	35.1	8.41	39.0	9.69
	31	19.8	4.48	23.7	5.45	27.5	6.52	29.4	7.09	31.3	7.69	35.1	8.96	39.0	10.33
	33	19.8	4.74	23.7	5.77	27.5	6.92	29.4	7.53	31.3	8.17	35.1	9.53	39.0	11.0
	35	19.8	5.01	23.7	6.12	27.5	7.34	29.4	8.00	31.3	8.68	35.1	10.14	39.0	11.7
	37	19.8	5.30	23.7	6.48	27.5	7.78	29.4	8.48	31.3	9.22	35.1	10.8	39.0	12.5
	39	19.8	5.59	23.7	6.86	27.5	8.25	29.4	9.00	31.3	9.78	35.1	11.5	39.0	13.3
50 (225)	10	16.5	2.95	19.7	3.42	22.9	3.91	24.5	4.17	26.1	4.43	29.3	4.97	32.5	5.54
	12	16.5	2.99	19.7	3.46	22.9	3.97	24.5	4.23	26.1	4.50	29.3	5.06	32.5	5.64
	14	16.5	3.03	19.7	3.52	22.9	4.03	24.5	4.30	26.1	4.57	29.3	5.14	32.5	5.74
	16	16.5	3.07	19.7	3.57	22.9	4.10	24.5	4.37	26.1	4.65	29.3	5.23	32.5	5.84
	18	16.5	3.11	19.7	3.62	22.9	4.16	24.5	4.44	26.1	4.73	29.3	5.33	32.5	5.95
	20	16.5	3.16	19.7	3.68	22.9	4.23	24.5	4.52	26.1	4.82	29.3	5.43	32.5	6.06
	21	16.5	3.18	19.7	3.71	22.9	4.27	24.5	4.56	26.1	4.86	29.3	5.48	32.5	6.12
	23	16.5	3.23	19.7	3.77	22.9	4.34	24.5	4.64	26.1	4.95	29.3	5.58	32.5	6.26
	25	16.5	3.28	19.7	3.83	22.9	4.42	24.5	4.74	26.1	5.10	29.3	5.86	32.5	6.68
	27	16.5	3.33	19.7	3.97	22.9	4.66	24.5	5.04	26.1	5.42	29.3	6.24	32.5	7.12
	29	16.5	3.52	19.7	4.20	22.9	4.95	24.5	5.35	26.1	5.76	29.3	6.64	32.5	7.58
	31	16.5	3.72	19.7	4.45	22.9	5.25	24.5	5.67	26.1	6.12	29.3	7.05	32.5	8.06
	33	16.5	3.93	19.7	4.71	22.9	5.56	24.5	6.02	26.1	6.49	29.3	7.49	32.5	8.57
	35	16.5	4.15	19.7	4.98	22.9	5.89	24.5	6.37	26.1	6.88	29.3	7.95	32.5	9.11
	37	16.5	4.38	19.7	5.26	22.9	6.23	24.5	6.75	26.1	7.29	29.3	8.44	32.5	9.67
	39	16.5	4.61	19.7	5.56	22.9	6.59	24.5	7.15	26.1	7.73	29.3	8.95	32.5	10.27

TC Total capacity ; kW
PI Power Input ; kW(Comp.+Outdoor fan motor)
Note1: The above table shows the average value of conditions which may occur.

RXQ20PY1 [50Hz]

Cooling capacity

Combination(%) (Capacity index)	Outdoor air temp. °CDB	Indoor air temp. 14.0°CWB TC kW	14.0°CWB PI kW	16.0°CWB TC kW	16.0°CWB PI kW	18.0°CWB TC kW	18.0°CWB PI kW	19.0°CWB TC kW	19.0°CWB PI kW	20.0°CWB TC kW	20.0°CWB PI kW	22.0°CWB TC kW	22.0°CWB PI kW	24.0°CWB TC kW	24.0°CWB PI kW
130 (650)	10	49.0	6.54	58.5	8.00	67.9	9.5	70.4	9.7	71.3	9.5	73.1	9.1	74.8	8.71
	12	49.0	6.66	58.5	8.15	67.9	9.7	69.5	9.7	70.4	9.5	72.1	9.1	73.9	8.9
	14	49.0	6.78	58.5	8.31	67.7	9.8	68.6	9.6	69.5	9.4	71.2	9.3	73.0	9.4
	16	49.0	6.92	58.5	8.47	66.8	9.8	67.7	9.7	68.6	9.7	70.3	9.8	72.1	9.9
	18	49.0	7.05	58.5	8.64	65.9	10.1	66.8	10.2	67.7	10.2	69.4	10.3	71.2	10.4
	20	49.0	7.19	58.5	9.2	65.0	10.6	65.9	10.7	66.7	10.7	68.5	10.9	70.3	11.0
	21	49.0	7.39	58.5	9.5	64.5	10.9	65.4	10.9	66.3	11.0	68.1	11.1	69.8	11.2
	23	49.0	7.92	58.5	10.2	63.6	11.4	64.5	11.4	65.4	11.5	67.1	11.6	68.9	11.7
	25	49.0	8.46	58.5	10.9	62.7	11.9	63.6	11.9	64.5	12.0	66.2	12.1	68.0	12.3
	27	49.0	9.0	58.5	11.7	61.8	12.4	62.7	12.5	63.6	12.5	65.3	12.6	67.1	12.8
	29	49.0	9.7	58.5	12.5	60.9	12.9	61.8	13.0	62.7	13.0	64.4	13.2	66.2	13.3
	31	49.0	10.3	58.2	13.2	60.0	13.4	60.9	13.5	61.7	13.5	63.5	13.7	65.3	13.8
	33	49.0	11.0	57.3	13.7	59.1	13.9	59.9	14.0	60.8	14.1	62.6	14.2	64.4	14.4
	35	49.0	11.7	56.4	14.2	58.2	14.4	59.0	14.5	59.9	14.6	61.7	14.7	63.5	14.9
	37	49.0	12.4	55.5	14.7	57.2	14.9	58.1	15.0	59.0	15.1	60.8	15.3	62.5	15.4
	39	49.0	13.2	54.6	15.3	56.3	15.4	57.2	15.5	58.1	15.6	59.9	15.8	61.6	16.0
120 (600)	10	45.3	5.97	54.0	7.30	62.7	8.68	67.1	9.4	70.2	9.8	71.8	9.4	73.4	9.0
	12	45.3	6.08	54.0	7.43	62.7	8.84	67.1	9.6	69.3	9.7	70.9	9.4	72.5	9.0
	14	45.3	6.20	54.0	7.58	62.7	9.0	67.1	9.7	68.4	9.7	70.0	9.3	71.6	9.4
	16	45.3	6.31	54.0	7.72	62.7	9.2	66.6	9.8	67.4	9.7	69.1	9.8	70.7	9.9
	18	45.3	6.44	54.0	7.88	62.7	9.5	65.7	10.1	66.5	10.2	68.2	10.3	69.8	10.4
	20	45.3	6.56	54.0	8.19	62.7	10.2	64.8	10.6	65.6	10.7	67.3	10.8	68.9	10.9
	21	45.3	6.63	54.0	8.48	62.7	10.6	64.4	10.9	65.2	10.9	66.8	11.0	68.4	11.1
	23	45.3	7.08	54.0	9.1	62.6	11.3	63.4	11.4	64.3	11.4	65.9	11.5	67.5	11.6
	25	45.3	7.56	54.0	9.7	61.7	11.8	62.5	11.9	63.4	11.9	65.0	12.0	66.6	12.2
	27	45.3	8.08	54.0	10.4	60.8	12.3	61.6	12.4	62.4	12.4	64.1	12.6	65.7	12.7
	29	45.3	8.61	54.0	11.1	59.9	12.8	60.7	12.9	61.5	12.9	63.2	13.1	64.8	13.2
	31	45.3	9.2	54.0	11.9	59.0	13.3	59.8	13.4	60.6	13.4	62.3	13.6	63.9	13.7
	33	45.3	9.8	54.0	12.6	58.1	13.8	58.9	13.9	59.7	14.0	61.3	14.1	63.0	14.2
	35	45.3	10.4	54.0	13.5	57.2	14.3	58.0	14.4	58.8	14.5	60.4	14.6	62.1	14.8
	37	45.3	11.1	54.0	14.4	56.3	14.8	57.1	14.9	57.9	15.0	59.5	15.1	61.2	15.3
	39	45.3	11.8	53.7	15.2	55.4	15.3	56.2	15.4	57.0	15.5	58.6	15.7	60.3	15.8
110 (550)	10	41.5	5.43	49.5	6.61	57.5	7.85	61.5	8.48	65.5	9.1	70.6	9.7	72.1	9.3
	12	41.5	5.52	49.5	6.73	57.5	7.99	61.5	8.64	65.5	9.3	69.6	9.6	71.1	9.3
	14	41.5	5.62	49.5	6.86	57.5	8.15	61.5	8.81	65.5	9.5	68.7	9.6	70.2	9.3
	16	41.5	5.73	49.5	6.99	57.5	8.31	61.5	9.0	65.5	9.7	67.8	9.7	69.3	9.8
	18	41.5	5.84	49.5	7.13	57.5	8.47	61.5	9.2	65.4	10.1	66.9	10.2	68.4	10.3
	20	41.5	5.95	49.5	7.27	57.5	9.0	61.5	9.9	64.5	10.6	66.0	10.7	67.5	10.8
	21	41.5	6.01	49.5	7.49	57.5	9.3	61.5	10.3	64.1	10.9	65.6	11.0	67.1	11.0
	23	41.5	6.29	49.5	8.02	57.5	10.0	61.5	11.0	63.2	11.4	64.6	11.5	66.1	11.6
	25	41.5	6.72	49.5	8.58	57.5	10.7	61.5	11.8	62.2	11.9	63.7	12.0	65.2	12.1
	27	41.5	7.17	49.5	9.2	57.5	11.4	60.6	12.3	61.3	12.4	62.8	12.5	64.3	12.6
	29	41.5	7.64	49.5	9.8	57.5	12.2	59.7	12.8	60.4	12.9	61.9	13.0	63.4	13.1
	31	41.5	8.13	49.5	10.4	57.5	13.0	58.8	13.3	59.5	13.4	61.0	13.5	62.5	13.6
	33	41.5	8.66	49.5	11.1	57.1	13.7	57.9	13.8	58.6	13.9	60.1	14.0	61.6	14.1
	35	41.5	9.2	49.5	11.8	56.2	14.2	56.9	14.3	57.7	14.4	59.2	14.5	60.7	14.6
	37	41.5	9.8	49.5	12.6	55.3	14.7	56.0	14.8	56.8	14.9	58.3	15.0	59.8	15.2
	39	41.5	10.4	49.5	13.4	54.4	15.2	55.1	15.3	55.9	15.4	57.4	15.5	58.9	15.7
100 (500)	10	37.7	4.89	45.0	5.93	52.3	7.03	55.9	7.60	59.5	8.17	66.8	9.3	70.7	9.7
	12	37.7	4.98	45.0	6.04	52.3	7.16	55.9	7.74	59.5	8.32	66.8	9.5	69.8	9.6
	14	37.7	5.07	45.0	6.15	52.3	7.30	55.9	7.89	59.5	8.48	66.8	9.7	68.8	9.6
	16	37.7	5.16	45.0	6.27	52.3	7.44	55.9	8.04	59.5	8.65	66.6	9.8	67.9	9.7
	18	37.7	5.26	45.0	6.39	52.3	7.59	55.9	8.20	59.5	8.82	65.7	10.1	67.0	10.2
	20	37.7	5.36	45.0	6.52	52.3	7.81	55.9	8.61	59.5	9.4	64.8	10.6	66.1	10.7
	21	37.7	5.41	45.0	6.58	52.3	8.09	55.9	8.9	59.5	9.8	64.3	10.9	65.7	11.0
	23	37.7	5.55	45.0	7.02	52.3	8.67	55.9	9.6	59.5	10.5	63.4	11.4	64.8	11.5
	25	37.7	5.92	45.0	7.50	52.3	9.3	55.9	10.2	59.5	11.2	62.5	11.9	63.8	12.0
	27	37.7	6.31	45.0	8.01	52.3	9.9	55.9	10.9	59.5	12.0	61.6	12.4	62.9	12.5
	29	37.7	6.72	45.0	8.54	52.3	10.6	55.9	11.7	59.3	12.8	60.7	12.9	62.0	13.0
	31	37.7	7.15	45.0	9.1	52.3	11.3	55.9	12.5	58.4	13.3	59.8	13.4	61.1	13.5
	33	37.7	7.60	45.0	9.7	52.3	12.0	55.9	13.3	57.5	13.8	58.8	13.9	60.2	14.0
	35	37.7	8.08	45.0	10.3	52.3	12.8	55.9	14.2	56.6	14.3	57.9	14.4	59.3	14.5
	37	37.7	8.59	45.0	11.0	52.3	13.7	55.0	14.7	55.7	14.8	57.0	14.9	58.4	15.0
	39	37.7	9.1	45.0	11.7	52.3	14.6	54.1	15.2	54.8	15.3	56.1	15.4	57.5	15.6

Cooling capacity

Combination(%) (Capacity index)	Outdoor air temp. °CDB	Indoor air temp. 14.0°CWB TC kW	14.0°CWB PI kW	16.0°CWB TC kW	16.0°CWB PI kW	18.0°CWB TC kW	18.0°CWB PI kW	19.0°CWB TC kW	19.0°CWB PI kW	20.0°CWB TC kW	20.0°CWB PI kW	22.0°CWB TC kW	22.0°CWB PI kW	24.0°CWB TC kW	24.0°CWB PI kW
90 (450)	10	34.0	4.38	40.5	5.28	47.0	6.24	50.3	6.73	53.6	7.23	60.1	8.26	66.7	9.3
	12	34.0	4.45	40.5	5.38	47.0	6.35	50.3	6.86	53.6	7.37	60.1	8.42	66.7	9.5
	14	34.0	4.53	40.5	5.47	47.0	6.47	50.3	6.99	53.6	7.51	60.1	8.58	66.7	9.7
	16	34.0	4.61	40.5	5.57	47.0	6.59	50.3	7.12	53.6	7.66	60.1	8.75	66.6	9.8
	18	34.0	4.69	40.5	5.68	47.0	6.72	50.3	7.26	53.6	7.81	60.1	8.9	65.6	10.1
	20	34.0	4.78	40.5	5.79	47.0	6.86	50.3	7.41	53.6	8.10	60.1	9.6	64.7	10.6
	21	34.0	4.82	40.5	5.85	47.0	6.97	50.3	7.66	53.6	8.39	60.1	9.9	64.3	10.9
	23	34.0	4.92	40.5	6.09	47.0	7.46	50.3	8.21	53.6	9.0	60.1	10.7	63.4	11.4
	25	34.0	5.18	40.5	6.50	47.0	7.98	50.3	8.78	53.6	9.6	60.1	11.4	62.5	11.9
	27	34.0	5.51	40.5	6.93	47.0	8.52	50.3	9.4	53.6	10.3	60.1	12.2	61.6	12.4
	29	34.0	5.87	40.5	7.39	47.0	9.1	50.3	10.0	53.6	11.0	59.4	12.8	60.6	12.9
	31	34.0	6.24	40.5	7.87	47.0	9.7	50.3	10.7	53.6	11.7	58.5	13.3	59.7	13.4
	33	34.0	6.62	40.5	8.37	47.0	10.3	50.3	11.4	53.6	12.5	57.6	13.8	58.8	13.9
	35	34.0	7.03	40.5	8.9	47.0	11.0	50.3	12.1	53.6	13.3	56.7	14.3	57.9	14.4
	37	34.0	7.46	40.5	9.5	47.0	11.7	50.3	12.9	53.6	14.2	55.8	14.8	57.0	14.9
	39	34.0	7.92	40.5	10.1	47.0	12.5	50.3	13.8	53.6	15.1	54.9	15.3	56.1	15.4
80 (400)	10	30.2	3.89	36.0	4.66	41.8	5.47	44.7	5.89	47.6	6.32	53.4	7.21	59.3	8.13
	12	30.2	3.95	36.0	4.74	41.8	5.57	44.7	6.00	47.6	6.44	53.4	7.35	59.3	8.28
	14	30.2	4.02	36.0	4.82	41.8	5.67	44.7	6.11	47.6	6.56	53.4	7.49	59.3	8.44
	16	30.2	4.08	36.0	4.91	41.8	5.78	44.7	6.23	47.6	6.69	53.4	7.63	59.3	8.60
	18	30.2	4.15	36.0	5.00	41.8	5.89	44.7	6.35	47.6	6.82	53.4	7.78	59.3	8.77
	20	30.2	4.23	36.0	5.09	41.8	6.00	44.7	6.47	47.6	6.95	53.4	8.07	59.3	9.4
	21	30.2	4.27	36.0	5.14	41.8	6.06	44.7	6.54	47.6	7.10	53.4	8.36	59.3	9.7
	23	30.2	4.34	36.0	5.24	41.8	6.35	44.7	6.96	47.6	7.60	53.4	9.0	59.3	10.4
	25	30.2	4.49	36.0	5.57	41.8	6.79	44.7	7.44	47.6	8.12	53.4	9.6	59.3	11.2
	27	30.2	4.77	36.0	5.94	41.8	7.24	44.7	7.94	47.6	8.67	53.4	10.2	59.3	11.9
	29	30.2	5.07	36.0	6.32	41.8	7.72	44.7	8.47	47.6	9.3	53.4	10.9	59.3	12.8
	31	30.2	5.38	36.0	6.72	41.8	8.22	44.7	9.0	47.6	9.9	53.4	11.7	58.3	13.3
	33	30.2	5.71	36.0	7.15	41.8	8.75	44.7	9.6	47.6	10.5	53.4	12.4	57.4	13.8
	35	30.2	6.06	36.0	7.59	41.8	9.3	44.7	10.2	47.6	11.2	53.4	13.3	56.5	14.3
	37	30.2	6.42	36.0	8.06	41.8	9.9	44.7	10.9	47.6	11.9	53.4	14.1	55.6	14.8
	39	30.2	6.81	36.0	8.56	41.8	10.5	44.7	11.6	47.6	12.7	53.4	15.1	54.7	15.3
70 (350)	10	26.4	3.42	31.5	4.06	36.6	4.74	39.1	5.09	41.7	5.45	46.8	6.20	51.9	6.97
	12	26.4	3.47	31.5	4.12	36.6	4.82	39.1	5.18	41.7	5.55	46.8	6.31	51.9	7.10
	14	26.4	3.53	31.5	4.19	36.6	4.90	39.1	5.27	41.7	5.65	46.8	6.43	51.9	7.23
	16	26.4	3.58	31.5	4.26	36.6	4.99	39.1	5.37	41.7	5.75	46.8	6.55	51.9	7.37
	18	26.4	3.64	31.5	4.34	36.6	5.08	39.1	5.47	41.7	5.86	46.8	6.68	51.9	7.52
	20	26.4	3.70	31.5	4.42	36.6	5.18	39.1	5.57	41.7	5.98	46.8	6.81	51.9	7.73
	21	26.4	3.73	31.5	4.46	36.6	5.23	39.1	5.63	41.7	6.04	46.8	6.92	51.9	8.00
	23	26.4	3.80	31.5	4.54	36.6	5.34	39.1	5.82	41.7	6.33	46.8	7.40	51.9	8.57
	25	26.4	3.87	31.5	4.72	36.6	5.69	39.1	6.21	41.7	6.76	46.8	7.91	51.9	9.2
	27	26.4	4.09	31.5	5.02	36.6	6.06	39.1	6.62	41.7	7.21	46.8	8.45	51.9	9.8
	29	26.4	4.34	31.5	5.34	36.6	6.46	39.1	7.05	41.7	7.68	46.8	9.0	51.9	10.5
	31	26.4	4.60	31.5	5.67	36.6	6.87	39.1	7.51	41.7	8.18	46.8	9.6	51.9	11.2
	33	26.4	4.87	31.5	6.02	36.6	7.30	39.1	7.99	41.7	8.71	46.8	10.2	51.9	11.9
	35	26.4	5.16	31.5	6.39	36.6	7.76	39.1	8.49	41.7	9.3	46.8	10.9	51.9	12.7
	37	26.4	5.46	31.5	6.78	36.6	8.24	39.1	9.0	41.7	9.8	46.8	11.6	51.9	13.5
	39	26.4	5.78	31.5	7.18	36.6	8.75	39.1	9.6	41.7	10.5	46.8	12.4	51.9	14.4
60 (300)	10	22.6	2.97	27.0	3.49	31.4	4.04	33.5	4.33	35.7	4.62	40.1	5.22	44.4	5.85
	12	22.6	3.02	27.0	3.54	31.4	4.11	33.5	4.40	35.7	4.70	40.1	5.32	44.4	5.96
	14	22.6	3.06	27.0	3.60	31.4	4.17	33.5	4.47	35.7	4.78	40.1	5.41	44.4	6.07
	16	22.6	3.11	27.0	3.66	31.4	4.25	33.5	4.55	35.7	4.87	40.1	5.51	44.4	6.18
	18	22.6	3.15	27.0	3.72	31.4	4.32	33.5	4.63	35.7	4.95	40.1	5.62	44.4	6.30
	20	22.6	3.20	27.0	3.78	31.4	4.40	33.5	4.72	35.7	5.05	40.1	5.72	44.4	6.43
	21	22.6	3.23	27.0	3.81	31.4	4.44	33.5	4.76	35.7	5.09	40.1	5.78	44.4	6.49
	23	22.6	3.28	27.0	3.88	31.4	4.52	33.5	4.85	35.7	5.19	40.1	6.01	44.4	6.90
	25	22.6	3.34	27.0	3.95	31.4	4.70	33.5	5.10	35.7	5.52	40.1	6.41	44.4	7.37
	27	22.6	3.46	27.0	4.19	31.4	5.00	33.5	5.43	35.7	5.88	40.1	6.84	44.4	7.87
	29	22.6	3.66	27.0	4.45	31.4	5.31	33.5	5.78	35.7	6.26	40.1	7.29	44.4	8.39
	31	22.6	3.88	27.0	4.72	31.4	5.64	33.5	6.14	35.7	6.66	40.1	7.76	44.4	8.9
	33	22.6	4.10	27.0	5.00	31.4	5.99	33.5	6.52	35.7	7.07	40.1	8.25	44.4	9.5
	35	22.6	4.34	27.0	5.30	31.4	6.36	33.5	6.92	35.7	7.52	40.1	8.78	44.4	10.1
	37	22.6	4.59	27.0	5.61	31.4	6.74	33.5	7.35	35.7	7.98	40.1	9.3	44.4	10.8
	39	22.6	4.84	27.0	5.94	31.4	7.14	33.5	7.79	35.7	8.47	40.1	9.9	44.4	11.5
50 (250)	10	18.9	2.56	22.5	2.96	26.1	3.39	28.0	3.61	29.8	3.84	33.4	4.31	37.0	4.80
	12	18.9	2.59	22.5	3.00	26.1	3.44	28.0	3.66	29.8	3.90	33.4	4.38	37.0	4.88
	14	18.9	2.62	22.5	3.04	26.1	3.49	28.0	3.72	29.8	3.96	33.4	4.45	37.0	4.97
	16	18.9	2.66	22.5	3.09	26.1	3.55	28.0	3.78	29.8	4.03	33.4	4.53	37.0	5.06
	18	18.9	2.70	22.5	3.14	26.1	3.60	28.0	3.85	29.8	4.10	33.4	4.61	37.0	5.15
	20	18.9	2.73	22.5	3.19	26.1	3.66	28.0	3.91	29.8	4.17	33.4	4.70	37.0	5.25
	21	18.9	2.75	22.5	3.21	26.1	3.70	28.0	3.95	29.8	4.21	33.4	4.74	37.0	5.30
	23	18.9	2.80	22.5	3.26	26.1	3.76	28.0	4.02	29.8	4.28	33.4	4.83	37.0	5.42
	25	18.9	2.84	22.5	3.32	26.1	3.83	28.0	4.10	29.8	4.41	33.4	5.07	37.0	5.78
	27	18.9	2.88	22.5	3.44	26.1	4.04	28.0	4.36	29.8	4.69	33.4	5.40	37.0	6.16
	29	18.9	3.05	22.5	3.64	26.1	4.29	28.0	4.63	29.8	4.99	33.4	5.75	37.0	6.56
	31	18.9	3.22	22.5	3.85	26.1	4.54	28.0	4.91	29.8	5.30	33.4	6.11	37.0	6.98
	33	18.9	3.40	22.5	4.08	26.1	4.81	28.0	5.21	29.8	5.62	33.4	6.49	37.0	7.42
	35	18.9	3.59	22.5	4.31	26.1	5.10	28.0	5.52	29.8	5.96	33.4	6.89	37.0	7.89
	37	18.9	3.79	22.5	4.55	26.1	5.40	28.0	5.85	29.8	6.31	33.4	7.31	37.0	8.38
	39	18.9	3.99	22.5	4.81	26.1	5.71	28.0	6.19	29.8	6.69	33.4	7.75	37.0	8.9

TC Total capacity ; kW
PI Power Input ; kW(Comp.+Outdoor fan motor)
Note1: The above table shows the average value of conditions which may occur.

RXQ22PY1 [50Hz]

Cooling capacity

Combination(%) (Capacity index)	Outdoor air temp. °CDB	Indoor air temp. 14.0°CWB TC kW	14.0°CWB PI kW	16.0°CWB TC kW	16.0°CWB PI kW	18.0°CWB TC kW	18.0°CWB PI kW	19.0°CWB TC kW	19.0°CWB PI kW	20.0°CWB TC kW	20.0°CWB PI kW	22.0°CWB TC kW	22.0°CWB PI kW	24.0°CWB TC kW	24.0°CWB PI kW
90 (495)	10	37.4	5.18	44.6	6.25	51.8	7.38	55.4	7.96	58.9	8.56	66.1	9.8	73.3	11.0
	12	37.4	5.27	44.6	6.36	51.8	7.51	55.4	8.11	58.9	8.72	66.1	10.0	73.3	11.2
	14	37.4	5.36	44.6	6.48	51.8	7.65	55.4	8.26	58.9	8.88	66.1	10.2	73.3	11.4
	16	37.4	5.45	44.6	6.60	51.8	7.80	55.4	8.42	58.9	9.06	66.1	10.3	73.2	11.6
	18	37.4	5.55	44.6	6.72	51.8	7.95	55.4	8.59	58.9	9.24	66.1	10.6	72.2	12.0
	20	37.4	5.66	44.6	6.85	51.8	8.11	55.4	8.76	58.9	9.58	66.1	11.3	71.2	12.6
	21	37.4	5.71	44.6	6.92	51.8	8.25	55.4	9.07	58.9	9.9	66.1	11.8	70.7	12.9
	23	37.4	5.82	44.6	7.20	51.8	8.83	55.4	9.71	58.9	10.6	66.1	12.6	69.7	13.5
	25	37.4	6.13	44.6	7.69	51.8	9.44	55.4	10.4	58.9	11.4	66.1	13.5	68.7	14.0
	27	37.4	6.52	44.6	8.20	51.8	10.1	55.4	11.1	58.9	12.2	66.1	14.4	67.7	14.6
	29	37.4	6.94	44.6	8.74	51.8	10.8	55.4	11.8	58.9	13.0	65.4	15.1	66.7	15.2
	31	37.4	7.38	44.6	9.31	51.8	11.5	55.4	12.6	58.9	13.9	64.4	15.7	65.7	15.8
	33	37.4	7.84	44.6	9.9	51.8	12.2	55.4	13.5	58.9	14.8	63.4	16.3	64.7	16.4
	35	37.4	8.32	44.6	10.5	51.8	13.0	55.4	14.4	58.9	15.8	62.4	16.9	63.7	17.0
	37	37.4	8.83	44.6	11.2	51.8	13.9	55.4	15.3	58.9	16.8	61.4	17.5	62.7	17.6
	39	37.4	9.37	44.6	11.9	51.8	14.7	55.4	16.3	58.9	17.9	60.4	18.1	61.7	18.2
80 (440)	10	33.2	4.60	39.6	5.51	46.0	6.47	49.2	6.97	52.4	7.48	58.8	8.53	65.2	9.61
	12	33.2	4.67	39.6	5.60	46.0	6.59	49.2	7.10	52.4	7.62	58.8	8.69	65.2	9.8
	14	33.2	4.75	39.6	5.70	46.0	6.71	49.2	7.23	52.4	7.76	58.8	8.86	65.2	10.0
	16	33.2	4.83	39.6	5.80	46.0	6.83	49.2	7.37	52.4	7.91	58.8	9.03	65.2	10.2
	18	33.2	4.92	39.6	5.91	46.0	6.96	49.2	7.51	52.4	8.07	58.8	9.21	65.2	10.4
	20	33.2	5.00	39.6	6.02	46.0	7.10	49.2	7.66	52.4	8.23	58.8	9.55	65.2	11.1
	21	33.2	5.05	39.6	6.08	46.0	7.17	49.2	7.73	52.4	8.40	58.8	9.9	65.2	11.5
	23	33.2	5.14	39.6	6.20	46.0	7.52	49.2	8.23	52.4	8.99	58.8	10.6	65.2	12.3
	25	33.2	5.31	39.6	6.59	46.0	8.03	49.2	8.80	52.4	9.61	58.8	11.3	65.2	13.2
	27	33.2	5.65	39.6	7.03	46.0	8.56	49.2	9.39	52.4	10.3	58.8	12.1	65.2	14.1
	29	33.2	6.00	39.6	7.48	46.0	9.13	49.2	10.0	52.4	10.9	58.8	12.9	65.2	15.1
	31	33.2	6.37	39.6	7.95	46.0	9.72	49.2	10.7	52.4	11.7	58.8	13.8	64.2	15.7
	33	33.2	6.76	39.6	8.46	46.0	10.3	49.2	11.4	52.4	12.4	58.8	14.7	63.2	16.3
	35	33.2	7.17	39.6	8.98	46.0	11.0	49.2	12.1	52.4	13.2	58.8	15.7	62.2	16.9
	37	33.2	7.60	39.6	9.54	46.0	11.7	49.2	12.9	52.4	14.1	58.8	16.7	61.2	17.5
	39	33.2	8.05	39.6	10.1	46.0	12.4	49.2	13.7	52.4	15.0	58.8	17.8	60.2	18.1
70 (385)	10	29.1	4.04	34.7	4.80	40.3	5.60	43.1	6.02	45.8	6.45	51.4	7.33	57.0	8.24
	12	29.1	4.11	34.7	4.88	40.3	5.70	43.1	6.13	45.8	6.56	51.4	7.46	57.0	8.40
	14	29.1	4.17	34.7	4.96	40.3	5.80	43.1	6.24	45.8	6.68	51.4	7.60	57.0	8.56
	16	29.1	4.24	34.7	5.05	40.3	5.91	43.1	6.35	45.8	6.81	51.4	7.75	57.0	8.72
	18	29.1	4.31	34.7	5.13	40.3	6.01	43.1	6.47	45.8	6.94	51.4	7.90	57.0	8.89
	20	29.1	4.38	34.7	5.23	40.3	6.13	43.1	6.59	45.8	7.07	51.4	8.06	57.0	9.14
	21	29.1	4.42	34.7	5.27	40.3	6.19	43.1	6.66	45.8	7.14	51.4	8.18	57.0	9.47
	23	29.1	4.49	34.7	5.37	40.3	6.31	43.1	6.89	45.8	7.48	51.4	8.76	57.0	10.1
	25	29.1	4.57	34.7	5.59	40.3	6.73	43.1	7.35	45.8	7.99	51.4	9.36	57.0	10.8
	27	29.1	4.83	34.7	5.94	40.3	7.17	43.1	7.84	45.8	8.53	51.4	10.0	57.0	11.6
	29	29.1	5.13	34.7	6.32	40.3	7.64	43.1	8.35	45.8	9.09	51.4	10.7	57.0	12.4
	31	29.1	5.44	34.7	6.71	40.3	8.13	43.1	8.88	45.8	9.68	51.4	11.4	57.0	13.2
	33	29.1	5.77	34.7	7.13	40.3	8.64	43.1	9.45	45.8	10.3	51.4	12.1	57.0	14.1
	35	29.1	6.11	34.7	7.56	40.3	9.18	43.1	10.0	45.8	11.0	51.4	12.9	57.0	15.0
	37	29.1	6.46	34.7	8.02	40.3	9.75	43.1	10.7	45.8	11.7	51.4	13.7	57.0	16.0
	39	29.1	6.84	34.7	8.50	40.3	10.3	43.1	11.3	45.8	12.4	51.4	14.6	57.0	17.0
60 (330)	10	24.9	3.52	29.7	4.13	34.5	4.78	36.9	5.12	39.3	5.46	44.1	6.18	48.9	6.92
	12	24.9	3.57	29.7	4.19	34.5	4.86	36.9	5.20	39.3	5.56	44.1	6.29	48.9	7.05
	14	24.9	3.62	29.7	4.26	34.5	4.94	36.9	5.29	39.3	5.65	44.1	6.40	48.9	7.18
	16	24.9	3.67	29.7	4.33	34.5	5.02	36.9	5.39	39.3	5.76	44.1	6.52	48.9	7.32
	18	24.9	3.73	29.7	4.40	34.5	5.11	36.9	5.48	39.3	5.86	44.1	6.64	48.9	7.46
	20	24.9	3.79	29.7	4.47	34.5	5.20	36.9	5.58	39.3	5.97	44.1	6.77	48.9	7.60
	21	24.9	3.82	29.7	4.51	34.5	5.25	36.9	5.63	39.3	6.03	44.1	6.84	48.9	7.68
	23	24.9	3.88	29.7	4.59	34.5	5.35	36.9	5.74	39.3	6.14	44.1	7.11	48.9	8.17
	25	24.9	3.95	29.7	4.68	34.5	5.56	36.9	6.03	39.3	6.53	44.1	7.59	48.9	8.72
	27	24.9	4.09	29.7	4.96	34.5	5.91	36.9	6.42	39.3	6.96	44.1	8.09	48.9	9.31
	29	24.9	4.33	29.7	5.26	34.5	6.29	36.9	6.83	39.3	7.40	44.1	8.62	48.9	9.9
	31	24.9	4.59	29.7	5.58	34.5	6.68	36.9	7.26	39.3	7.88	44.1	9.18	48.9	10.6
	33	24.9	4.85	29.7	5.92	34.5	7.09	36.9	7.71	39.3	8.37	44.1	9.8	48.9	11.3
	35	24.9	5.13	29.7	6.27	34.5	7.52	36.9	8.19	39.3	8.89	44.1	10.4	48.9	12.0
	37	24.9	5.42	29.7	6.63	34.5	7.97	36.9	8.69	39.3	9.44	44.1	11.0	48.9	12.8
	39	24.9	5.73	29.7	7.02	34.5	8.45	36.9	9.22	39.3	10.0	44.1	11.7	48.9	13.6
50 (275)	10	20.8	3.02	24.8	3.50	28.8	4.00	30.8	4.27	32.7	4.54	36.7	5.10	40.7	5.68
	12	20.8	3.06	24.8	3.55	28.8	4.07	30.8	4.33	32.7	4.61	36.7	5.18	40.7	5.77
	14	20.8	3.10	24.8	3.60	28.8	4.13	30.8	4.40	32.7	4.69	36.7	5.27	40.7	5.88
	16	20.8	3.15	24.8	3.65	28.8	4.20	30.8	4.48	32.7	4.77	36.7	5.36	40.7	5.98
	18	20.8	3.19	24.8	3.71	28.8	4.26	30.8	4.55	32.7	4.85	36.7	5.46	40.7	6.09
	20	20.8	3.24	24.8	3.77	28.8	4.34	30.8	4.63	32.7	4.93	36.7	5.56	40.7	6.21
	21	20.8	3.26	24.8	3.80	28.8	4.37	30.8	4.67	32.7	4.98	36.7	5.61	40.7	6.27
	23	20.8	3.31	24.8	3.86	28.8	4.45	30.8	4.75	32.7	5.07	36.7	5.72	40.7	6.41
	25	20.8	3.36	24.8	3.92	28.8	4.53	30.8	4.85	32.7	5.22	36.7	6.00	40.7	6.84
	27	20.8	3.41	24.8	4.06	28.8	4.78	30.8	5.16	32.7	5.55	36.7	6.39	40.7	7.29
	29	20.8	3.61	24.8	4.31	28.8	5.07	30.8	5.48	32.7	5.90	36.7	6.80	40.7	7.76
	31	20.8	3.81	24.8	4.56	28.8	5.38	30.8	5.81	32.7	6.26	36.7	7.23	40.7	8.26
	33	20.8	4.03	24.8	4.82	28.8	5.70	30.8	6.16	32.7	6.65	36.7	7.67	40.7	8.78
	35	20.8	4.25	24.8	5.10	28.8	6.03	30.8	6.53	32.7	7.05	36.7	8.15	40.7	9.33
	37	20.8	4.48	24.8	5.39	28.8	6.38	30.8	6.92	32.7	7.47	36.7	8.65	40.7	9.9
	39	20.8	4.73	24.8	5.69	28.8	6.76	30.8	7.32	32.7	7.91	36.7	9.17	40.7	10.5

TC Total capacity ; kW
PI Power Input ; kW(Comp.+Outdoor fan motor)
Note1: The above table shows the average value of conditions which may occur.

Cooling capacity

Combination(%) (Capacity index)	Outdoor air temp. °CDB	Indoor air temp. 14.0°CWB TC kW	14.0°CWB PI kW	16.0°CWB TC kW	16.0°CWB PI kW	18.0°CWB TC kW	18.0°CWB PI kW	19.0°CWB TC kW	19.0°CWB PI kW	20.0°CWB TC kW	20.0°CWB PI kW	22.0°CWB TC kW	22.0°CWB PI kW	24.0°CWB TC kW	24.0°CWB PI kW
130 (715)	10	54.0	7.74	64.4	9.47	74.8	11.3	77.5	11.5	78.4	11.3	80.4	10.8	82.3	10.3
	12	54.0	7.88	64.4	9.65	74.8	11.5	76.5	11.4	77.4	11.2	79.4	10.7	81.3	10.6
	14	54.0	8.03	64.4	9.8	74.5	11.6	75.5	11.4	76.4	11.1	78.4	11.1	80.3	11.2
	16	54.0	8.18	64.4	10.0	73.5	11.6	74.5	11.5	75.4	11.5	77.4	11.6	79.3	11.8
	18	54.0	8.34	64.4	10.2	72.5	12.0	73.5	12.1	74.4	12.1	76.4	12.2	78.3	12.4
	20	54.0	8.51	64.4	10.9	71.5	12.6	72.5	12.7	73.4	12.7	75.4	12.8	77.3	13.0
	21	54.0	8.75	64.4	11.3	71.0	12.9	72.0	12.9	72.9	13.0	74.9	13.1	76.8	13.3
	23	54.0	9.36	64.4	12.1	70.0	13.5	71.0	13.5	71.9	13.6	73.9	13.7	75.8	13.9
	25	54.0	10.0	64.4	12.9	69.0	14.1	70.0	14.1	70.9	14.2	72.9	14.4	74.8	14.5
	27	54.0	10.7	64.4	13.9	68.0	14.7	69.0	14.7	69.9	14.8	71.9	15.0	73.8	15.1
	29	54.0	11.4	64.4	14.8	67.0	15.2	68.0	15.3	68.9	15.4	70.9	15.6	72.8	15.7
	31	54.0	12.2	64.0	15.7	66.0	15.8	67.0	15.9	67.9	16.0	69.9	16.2	71.8	16.4
	33	54.0	13.0	63.0	16.3	65.0	16.4	66.0	16.5	66.9	16.6	68.9	16.8	70.8	17.0
	35	54.0	13.8	62.0	16.9	64.0	17.0	65.0	17.1	65.9	17.2	67.9	17.4	69.8	17.6
	37	54.0	14.7	61.0	17.4	63.0	17.7	64.0	17.8	64.9	17.9	66.9	18.1	68.8	18.3
	39	54.0	15.7	60.0	18.0	62.0	18.3	63.0	18.4	63.9	18.5	65.9	18.7	67.8	18.9
120 (660)	10	49.8	7.07	59.4	8.63	69.0	10.3	73.8	11.1	77.2	11.6	79.0	11.1	80.8	10.7
	12	49.8	7.20	59.4	8.80	69.0	10.5	73.8	11.3	76.2	11.5	78.0	11.1	79.8	10.6
	14	49.8	7.33	59.4	8.96	69.0	10.7	73.8	11.5	75.2	11.4	77.0	11.0	78.8	11.1
	16	49.8	7.47	59.4	9.14	69.0	10.9	73.3	11.6	74.2	11.5	76.0	11.6	77.8	11.7
	18	49.8	7.61	59.4	9.32	69.0	11.2	72.3	12.0	73.2	12.1	75.0	12.2	76.8	12.3
	20	49.8	7.76	59.4	9.69	69.0	12.1	71.3	12.6	72.2	12.6	74.0	12.8	75.8	12.9
	21	49.8	7.84	59.4	10.0	69.0	12.5	70.8	12.9	71.7	12.9	73.5	13.1	75.3	13.2
	23	49.8	8.37	59.4	10.7	68.9	13.4	69.8	13.5	70.7	13.5	72.5	13.7	74.3	13.8
	25	49.8	8.95	59.4	11.5	67.9	14.0	68.8	14.0	69.7	14.1	71.5	14.3	73.3	14.4
	27	49.8	9.55	59.4	12.3	66.9	14.6	67.8	14.6	68.7	14.7	70.5	14.9	72.3	15.0
	29	49.8	10.2	59.4	13.1	65.9	15.2	66.8	15.2	67.7	15.3	69.5	15.5	71.3	15.6
	31	49.8	10.9	59.4	14.0	64.9	15.7	65.8	15.8	66.7	15.9	68.5	16.1	70.3	16.2
	33	49.8	11.6	59.4	15.0	63.9	16.3	64.8	16.4	65.7	16.5	67.5	16.7	69.3	16.8
	35	49.8	12.3	59.4	15.9	62.9	16.9	63.8	17.0	64.7	17.1	66.5	17.3	68.3	17.5
	37	49.8	13.1	59.4	17.0	61.9	17.5	62.8	17.6	63.7	17.7	65.5	17.9	67.3	18.1
	39	49.8	13.9	59.1	17.9	60.9	18.1	61.8	18.2	62.7	18.3	64.5	18.5	66.3	18.7
110 (605)	10	45.7	6.42	54.5	7.82	63.3	9.28	67.7	10.0	72.0	10.8	77.6	11.5	79.3	11.1
	12	45.7	6.53	54.5	7.96	63.3	9.46	67.7	10.2	72.0	11.0	76.6	11.4	78.3	11.0
	14	45.7	6.65	54.5	8.11	63.3	9.64	67.7	10.4	72.0	11.2	75.6	11.3	77.3	11.0
	16	45.7	6.78	54.5	8.27	63.3	9.8	67.7	10.6	72.0	11.4	74.6	11.5	76.3	11.6
	18	45.7	6.91	54.5	8.43	63.3	10.0	67.7	10.9	72.0	12.0	73.6	12.1	75.3	12.2
	20	45.7	7.04	54.5	8.60	63.3	10.6	67.7	11.7	71.0	12.6	72.6	12.7	74.3	12.8
	21	45.7	7.11	54.5	8.86	63.3	11.0	67.7	12.2	70.5	12.9	72.1	13.0	73.8	13.1
	23	45.7	7.44	54.5	9.49	63.3	11.8	67.7	13.0	69.5	13.4	71.1	13.6	72.8	13.7
	25	45.7	7.95	54.5	10.1	63.3	12.6	67.7	14.0	68.5	14.0	70.1	14.1	71.8	14.3
	27	45.7	8.48	54.5	10.8	63.3	13.5	66.7	14.5	67.5	14.6	69.1	14.7	70.8	14.9
	29	45.7	9.04	54.5	11.6	63.3	14.4	65.7	15.1	66.5	15.2	68.1	15.3	69.8	15.5
	31	45.7	9.62	54.5	12.3	63.3	15.4	64.7	15.7	65.5	15.8	67.1	15.9	68.8	16.1
	33	45.7	10.2	54.5	13.2	62.8	16.2	63.7	16.3	64.5	16.4	66.1	16.6	67.8	16.7
	35	45.7	10.9	54.5	14.0	61.8	16.8	62.7	16.9	63.5	17.0	65.1	17.2	66.8	17.3
	37	45.7	11.6	54.5	14.9	60.8	17.4	61.7	17.5	62.5	17.6	64.1	17.8	65.8	17.9
	39	45.7	12.3	54.5	15.9	59.8	18.0	60.6	18.1	61.5	18.2	63.1	18.4	64.8	18.6
100 (550)	10	41.5	5.79	49.5	7.02	57.5	8.32	61.5	8.99	65.5	9.66	73.5	11.0	77.7	11.4
	12	41.5	5.89	49.5	7.15	57.5	8.47	61.5	9.15	65.5	9.8	73.5	11.3	76.7	11.4
	14	41.5	5.99	49.5	7.28	57.5	8.63	61.5	9.33	65.5	10.0	73.5	11.5	75.7	11.3
	16	41.5	6.10	49.5	7.42	57.5	8.80	61.5	9.51	65.5	10.2	73.2	11.6	74.7	11.5
	18	41.5	6.22	49.5	7.56	57.5	8.97	61.5	9.70	65.5	10.4	72.2	12.0	73.7	12.1
	20	41.5	6.34	49.5	7.71	57.5	9.25	61.5	10.2	65.5	11.2	71.2	12.6	72.7	12.7
	21	41.5	6.40	49.5	7.79	57.5	9.57	61.5	10.6	65.5	11.6	70.7	12.9	72.2	13.0
	23	41.5	6.57	49.5	8.30	57.5	10.3	61.5	11.3	65.5	12.4	69.7	13.5	71.2	13.6
	25	41.5	7.01	49.5	8.87	57.5	11.0	61.5	12.1	65.5	13.3	68.7	14.0	70.2	14.2
	27	41.5	7.47	49.5	9.47	57.5	11.7	61.5	12.9	65.5	14.2	67.7	14.6	69.2	14.8
	29	41.5	7.95	49.5	10.1	57.5	12.5	61.5	13.8	65.2	15.1	66.7	15.2	68.2	15.4
	31	41.5	8.46	49.5	10.8	57.5	13.4	61.5	14.8	64.2	15.7	65.7	15.8	67.2	16.0
	33	41.5	9.00	49.5	11.5	57.5	14.2	61.5	15.8	63.2	16.3	64.7	16.4	66.2	16.6
	35	41.5	9.56	49.5	12.2	57.5	15.2	61.5	16.8	62.2	16.9	63.7	17.0	65.2	17.2
	37	41.5	10.2	49.5	13.0	57.5	16.2	60.5	17.4	61.2	17.5	62.7	17.6	64.2	17.8
	39	41.5	10.8	49.5	13.8	57.5	17.2	59.5	18.0	60.2	18.1	61.7	18.2	63.2	18.4

RXQ24PY1 [50Hz]

Cooling capacity

Combination(%) (Capacity index)	Outdoor air temp. °CDB	Indoor air temp. 14.0°CWB TC kW	14.0°CWB PI kW	16.0°CWB TC kW	16.0°CWB PI kW	18.0°CWB TC kW	18.0°CWB PI kW	19.0°CWB TC kW	19.0°CWB PI kW	20.0°CWB TC kW	20.0°CWB PI kW	22.0°CWB TC kW	22.0°CWB PI kW	24.0°CWB TC kW	24.0°CWB PI kW
130 (780)	10	59.1	8.93	70.5	10.9	81.9	13.0	84.9	13.3	86.0	13.0	88.1	12.5	90.2	11.9
	12	59.1	9.1	70.5	11.1	81.9	13.3	83.8	13.2	84.9	12.9	87.0	12.4	89.1	12.2
	14	59.1	9.3	70.5	11.4	81.6	13.4	82.7	13.1	83.8	12.9	85.9	12.8	88.0	12.9
	16	59.1	9.4	70.5	11.6	80.5	13.4	81.6	13.3	82.7	13.3	84.8	13.4	86.9	13.6
	18	59.1	9.6	70.5	11.8	79.4	13.9	80.5	13.9	81.6	14.0	83.7	14.1	85.8	14.3
	20	59.1	9.8	70.5	12.6	78.3	14.5	79.4	14.6	80.5	14.7	82.6	14.8	84.7	15.0
	21	59.1	10.1	70.5	13.0	77.8	14.9	78.9	15.0	79.9	15.0	82.1	15.2	84.2	15.3
	23	59.1	10.8	70.5	14.0	76.7	15.6	77.8	15.6	78.8	15.7	81.0	15.9	83.1	16.0
	25	59.1	11.6	70.5	15.0	75.6	16.2	76.7	16.3	77.7	16.4	79.9	16.6	82.0	16.7
	27	59.1	12.4	70.5	16.0	74.5	16.9	75.6	17.0	76.6	17.1	78.8	17.3	80.9	17.5
	29	59.1	13.2	70.5	17.1	73.4	17.6	74.5	17.7	75.5	17.8	77.7	18.0	79.8	18.2
	31	59.1	14.1	70.2	18.1	72.3	18.3	73.4	18.4	74.4	18.5	76.6	18.7	78.7	18.9
	33	59.1	15.0	69.1	18.8	71.2	19.0	72.3	19.1	73.3	19.2	75.5	19.4	77.6	19.6
	35	59.1	16.0	68.0	19.5	70.1	19.7	71.2	19.8	72.2	19.9	74.4	20.1	76.5	20.4
	37	59.1	17.0	66.9	20.1	69.0	20.4	70.1	20.5	71.2	20.6	73.3	20.9	75.4	21.1
	39	59.1	18.1	65.8	20.8	67.9	21.1	69.0	21.2	70.1	21.3	72.2	21.6	74.3	21.8
120 (720)	10	54.6	8.16	65.1	10.0	75.6	11.9	80.9	12.8	84.6	13.3	86.6	12.8	88.5	12.3
	12	54.6	8.31	65.1	10.2	75.6	12.1	80.9	13.1	83.5	13.3	85.5	12.8	87.5	12.3
	14	54.6	8.47	65.1	10.4	75.6	12.3	80.9	13.3	82.4	13.2	84.4	12.7	86.4	12.8
	16	54.6	8.63	65.1	10.6	75.6	12.6	80.3	13.4	81.3	13.2	83.3	13.4	85.3	13.5
	18	54.6	8.79	65.1	10.8	75.6	13.0	79.2	13.9	80.2	13.9	82.2	14.0	84.2	14.2
	20	54.6	8.97	65.1	11.2	75.6	14.0	78.1	14.5	79.1	14.6	81.1	14.7	83.1	14.9
	21	54.6	9.06	65.1	11.6	75.6	14.5	77.6	14.9	78.6	14.9	80.5	15.1	82.5	15.2
	23	54.6	9.7	65.1	12.4	75.5	15.5	76.5	15.5	77.5	15.6	79.5	15.8	81.4	15.9
	25	54.6	10.3	65.1	13.3	74.4	16.1	75.4	16.2	76.4	16.3	78.4	16.5	80.3	16.6
	27	54.6	11.0	65.1	14.2	73.3	16.8	74.3	16.9	75.3	17.0	77.3	17.2	79.2	17.3
	29	54.6	11.8	65.1	15.2	72.2	17.5	73.2	17.6	74.2	17.7	76.2	17.9	78.1	18.0
	31	54.6	12.5	65.1	16.2	71.1	18.2	72.1	18.3	73.1	18.4	75.1	18.6	77.0	18.7
	33	54.6	13.4	65.1	17.3	70.0	18.9	71.0	19.0	72.0	19.1	74.0	19.3	75.9	19.5
	35	54.6	14.2	65.1	18.4	68.9	19.6	69.9	19.7	70.9	19.8	72.9	20.0	74.8	20.2
	37	54.6	15.1	65.1	19.6	67.8	20.3	68.8	20.4	69.8	20.5	71.8	20.7	73.7	20.9
	39	54.6	16.1	64.8	20.7	66.7	20.9	67.7	21.1	68.7	21.2	70.7	21.4	72.7	21.6
110 (660)	10	50.0	7.41	59.7	9.03	69.3	10.7	74.1	11.6	79.0	12.5	85.1	13.2	86.9	12.8
	12	50.0	7.54	59.7	9.2	69.3	10.9	74.1	11.8	79.0	12.7	84.0	13.2	85.8	12.7
	14	50.0	7.68	59.7	9.4	69.3	11.1	74.1	12.0	79.0	12.9	82.9	13.1	84.7	12.7
	16	50.0	7.83	59.7	9.5	69.3	11.3	74.1	12.3	79.0	13.2	81.8	13.3	83.6	13.4
	18	50.0	7.97	59.7	9.7	69.3	11.6	74.1	12.6	78.9	13.8	80.7	13.9	82.5	14.1
	20	50.0	8.13	59.7	9.9	69.3	12.3	74.1	13.5	77.8	14.5	79.6	14.6	81.4	14.7
	21	50.0	8.21	59.7	10.2	69.3	12.7	74.1	14.0	77.2	14.8	79.0	15.0	80.8	15.1
	23	50.0	8.59	59.7	11.0	69.3	13.6	74.1	15.1	76.1	15.5	77.9	15.7	79.7	15.8
	25	50.0	9.2	59.7	11.7	69.3	14.6	74.1	16.1	75.0	16.2	76.8	16.3	78.7	16.5
	27	50.0	9.8	59.7	12.5	69.3	15.6	73.0	16.8	73.9	16.9	75.8	17.0	77.6	17.2
	29	50.0	10.4	59.7	13.4	69.3	16.7	72.0	17.5	72.9	17.6	74.7	17.7	76.5	17.9
	31	50.0	11.1	59.7	14.2	69.3	17.8	70.9	18.2	71.8	18.2	73.6	18.4	75.4	18.6
	33	50.0	11.8	59.7	15.2	68.9	18.8	69.8	18.8	70.7	18.9	72.5	19.1	74.3	19.3
	35	50.0	12.6	59.7	16.2	67.8	19.4	68.7	19.5	69.6	19.6	71.4	19.8	73.2	20.0
	37	50.0	13.4	59.7	17.2	66.7	20.1	67.6	20.2	68.5	20.3	70.3	20.5	72.1	20.7
	39	50.0	14.2	59.7	18.3	65.6	20.8	66.5	20.9	67.4	21.0	69.2	21.2	71.0	21.4
100 (600)	10	45.5	6.69	54.3	8.11	63.0	9.6	67.4	10.4	71.8	11.2	80.5	12.8	85.2	13.2
	12	45.5	6.80	54.3	8.25	63.0	9.8	67.4	10.6	71.8	11.4	80.5	13.0	84.1	13.1
	14	45.5	6.92	54.3	8.41	63.0	10.0	67.4	10.8	71.8	11.6	80.5	13.2	83.0	13.1
	16	45.5	7.05	54.3	8.57	63.0	10.2	67.4	11.0	71.8	11.8	80.3	13.4	81.9	13.3
	18	45.5	7.18	54.3	8.73	63.0	10.4	67.4	11.2	71.8	12.0	79.2	13.8	80.8	14.0
	20	45.5	7.32	54.3	8.90	63.0	10.7	67.4	11.8	71.8	12.9	78.1	14.5	79.7	14.6
	21	45.5	7.39	54.3	8.99	63.0	11.1	67.4	12.2	71.8	13.4	77.5	14.9	79.2	15.0
	23	45.5	7.58	54.3	9.6	63.0	11.8	67.4	13.1	71.8	14.3	76.4	15.5	78.1	15.7
	25	45.5	8.09	54.3	10.2	63.0	12.7	67.4	14.0	71.8	15.4	75.3	16.2	77.0	16.3
	27	45.5	8.62	54.3	10.9	63.0	13.5	67.4	14.9	71.8	16.4	74.2	16.9	75.9	17.0
	29	45.5	9.2	54.3	11.7	63.0	14.5	67.4	16.0	71.5	17.4	73.1	17.6	74.8	17.7
	31	45.5	9.8	54.3	12.4	63.0	15.4	67.4	17.1	70.4	18.1	72.1	18.3	73.7	18.4
	33	45.5	10.4	54.3	13.2	63.0	16.5	67.4	18.2	69.3	18.8	71.0	19.0	72.6	19.1
	35	45.5	11.0	54.3	14.1	63.0	17.5	67.4	19.4	68.2	19.5	69.9	19.7	71.5	19.8
	37	45.5	11.7	54.3	15.0	63.0	18.7	66.3	20.1	67.1	20.2	68.8	20.4	70.4	20.5
	39	45.5	12.5	54.3	16.0	63.0	19.9	65.2	20.8	66.0	20.9	67.7	21.1	69.3	21.2

Cooling capacity

Combination(%) (Capacity index)	Outdoor air temp. °CDB	Indoor air temp. 14.0°CWB TC kW	14.0°CWB PI kW	16.0°CWB TC kW	16.0°CWB PI kW	18.0°CWB TC kW	18.0°CWB PI kW	19.0°CWB TC kW	19.0°CWB PI kW	20.0°CWB TC kW	20.0°CWB PI kW	22.0°CWB TC kW	22.0°CWB PI kW	24.0°CWB TC kW	24.0°CWB PI kW
90 (540)	10	40.9	5.98	48.8	7.22	56.7	8.52	60.7	9.2	64.6	9.9	72.5	11.3	80.4	12.7
	12	40.9	6.08	48.8	7.34	56.7	8.68	60.7	9.4	64.6	10.1	72.5	11.5	80.4	13.0
	14	40.9	6.19	48.8	7.48	56.7	8.84	60.7	9.5	64.6	10.3	72.5	11.7	80.4	13.2
	16	40.9	6.30	48.8	7.62	56.7	9.01	60.7	9.7	64.6	10.5	72.5	12.0	80.2	13.4
	18	40.9	6.41	48.8	7.76	56.7	9.2	60.7	9.9	64.6	10.7	72.5	12.2	79.1	13.8
	20	40.9	6.53	48.8	7.91	56.7	9.4	60.7	10.1	64.6	11.1	72.5	13.1	78.1	14.5
	21	40.9	6.59	48.8	7.99	56.7	9.5	60.7	10.5	64.6	11.5	72.5	13.6	77.5	14.9
	23	40.9	6.72	48.8	8.32	56.7	10.2	60.7	11.2	64.6	12.3	72.5	14.6	76.4	15.5
	25	40.9	7.07	48.8	8.88	56.7	10.9	60.7	12.0	64.6	13.1	72.5	15.6	75.3	16.2
	27	40.9	7.53	48.8	9.5	56.7	11.6	60.7	12.8	64.6	14.0	72.5	16.7	74.2	16.9
	29	40.9	8.01	48.8	10.1	56.7	12.4	60.7	13.7	64.6	15.0	71.6	17.5	73.1	17.6
	31	40.9	8.52	48.8	10.7	56.7	13.2	60.7	14.6	64.6	16.0	70.5	18.1	72.0	18.3
	33	40.9	9.05	48.8	11.4	56.7	14.1	60.7	15.6	64.6	17.1	69.4	18.8	70.9	19.0
	35	40.9	9.6	48.8	12.2	56.7	15.0	60.7	16.6	64.6	18.2	68.4	19.5	69.8	19.7
	37	40.9	10.2	48.8	12.9	56.7	16.0	60.7	17.7	64.6	19.4	67.3	20.2	68.7	20.4
	39	40.9	10.8	48.8	13.7	56.7	17.0	60.7	18.8	64.6	20.7	66.2	20.9	67.6	21.1
80 (480)	10	36.4	5.31	43.4	6.36	50.4	7.47	53.9	8.05	57.4	8.64	64.4	9.9	71.5	11.1
	12	36.4	5.40	43.4	6.47	50.4	7.61	53.9	8.20	57.4	8.80	64.4	10.0	71.5	11.3
	14	36.4	5.49	43.4	6.58	50.4	7.75	53.9	8.35	57.4	8.97	64.4	10.2	71.5	11.5
	16	36.4	5.58	43.4	6.70	50.4	7.89	53.9	8.51	57.4	9.1	64.4	10.4	71.5	11.8
	18	36.4	5.68	43.4	6.82	50.4	8.04	53.9	8.67	57.4	9.3	64.4	10.6	71.5	12.0
	20	36.4	5.78	43.4	6.95	50.4	8.20	53.9	8.84	57.4	9.5	64.4	11.0	71.5	12.8
	21	36.4	5.83	43.4	7.02	50.4	8.28	53.9	8.93	57.4	9.7	64.4	11.4	71.5	13.3
	23	36.4	5.94	43.4	7.15	50.4	8.68	53.9	9.5	57.4	10.4	64.4	12.2	71.5	14.2
	25	36.4	6.13	43.4	7.62	50.4	9.3	53.9	10.2	57.4	11.1	64.4	13.1	71.5	15.2
	27	36.4	6.52	43.4	8.11	50.4	9.9	53.9	10.8	57.4	11.8	64.4	14.0	71.5	16.3
	29	36.4	6.93	43.4	8.64	50.4	10.5	53.9	11.6	57.4	12.6	64.4	14.9	71.4	17.4
	31	36.4	7.36	43.4	9.2	50.4	11.2	53.9	12.3	57.4	13.5	64.4	15.9	70.4	18.1
	33	36.4	7.81	43.4	9.8	50.4	11.9	53.9	13.1	57.4	14.4	64.4	17.0	69.3	18.8
	35	36.4	8.28	43.4	10.4	50.4	12.7	53.9	14.0	57.4	15.3	64.4	18.1	68.2	19.5
	37	36.4	8.78	43.4	11.0	50.4	13.5	53.9	14.9	57.4	16.3	64.4	19.3	67.1	20.2
	39	36.4	9.3	43.4	11.7	50.4	14.4	53.9	15.8	57.4	17.3	64.4	20.6	66.0	20.9
70 (420)	10	31.8	4.67	38.0	5.54	44.1	6.47	47.2	6.95	50.2	7.45	56.4	8.46	62.5	9.5
	12	31.8	4.74	38.0	5.63	44.1	6.58	47.2	7.08	50.2	7.58	56.4	8.62	62.5	9.7
	14	31.8	4.82	38.0	5.73	44.1	6.70	47.2	7.20	50.2	7.72	56.4	8.78	62.5	9.9
	16	31.8	4.89	38.0	5.83	44.1	6.82	47.2	7.33	50.2	7.86	56.4	8.95	62.5	10.1
	18	31.8	4.97	38.0	5.93	44.1	6.94	47.2	7.47	50.2	8.01	56.4	9.1	62.5	10.3
	20	31.8	5.06	38.0	6.04	44.1	7.08	47.2	7.62	50.2	8.17	56.4	9.3	62.5	10.6
	21	31.8	5.10	38.0	6.09	44.1	7.14	47.2	7.69	50.2	8.25	56.4	9.5	62.5	10.9
	23	31.8	5.19	38.0	6.20	44.1	7.29	47.2	7.95	50.2	8.64	56.4	10.1	62.5	11.7
	25	31.8	5.28	38.0	6.45	44.1	7.78	47.2	8.49	50.2	9.2	56.4	10.8	62.5	12.5
	27	31.8	5.58	38.0	6.86	44.1	8.29	47.2	9.05	50.2	9.8	56.4	11.5	62.5	13.4
	29	31.8	5.93	38.0	7.30	44.1	8.82	47.2	9.6	50.2	10.5	56.4	12.3	62.5	14.3
	31	31.8	6.28	38.0	7.75	44.1	9.4	47.2	10.3	50.2	11.2	56.4	13.1	62.5	15.2
	33	31.8	6.66	38.0	8.23	44.1	10.0	47.2	10.9	50.2	11.9	56.4	14.0	62.5	16.3
	35	31.8	7.05	38.0	8.73	44.1	10.6	47.2	11.6	50.2	12.7	56.4	14.9	62.5	17.3
	37	31.8	7.46	38.0	9.3	44.1	11.3	47.2	12.3	50.2	13.5	56.4	15.9	62.5	18.5
	39	31.8	7.90	38.0	9.8	44.1	12.0	47.2	13.1	50.2	14.3	56.4	16.9	62.5	19.7
60 (360)	10	27.3	4.06	32.6	4.77	37.8	5.52	40.4	5.91	43.1	6.31	48.3	7.14	53.6	8.00
	12	27.3	4.12	32.6	4.84	37.8	5.61	40.4	6.01	43.1	6.42	48.3	7.26	53.6	8.14
	14	27.3	4.18	32.6	4.92	37.8	5.70	40.4	6.11	43.1	6.53	48.3	7.39	53.6	8.29
	16	27.3	4.24	32.6	5.00	37.8	5.80	40.4	6.22	43.1	6.65	48.3	7.53	53.6	8.45
	18	27.3	4.31	32.6	5.08	37.8	5.90	40.4	6.33	43.1	6.77	48.3	7.67	53.6	8.61
	20	27.3	4.38	32.6	5.17	37.8	6.01	40.4	6.45	43.1	6.89	48.3	7.82	53.6	8.78
	21	27.3	4.41	32.6	5.21	37.8	6.06	40.4	6.51	43.1	6.96	48.3	7.90	53.6	8.87
	23	27.3	4.48	32.6	5.30	37.8	6.18	40.4	6.63	43.1	7.10	48.3	8.21	53.6	9.4
	25	27.3	4.56	32.6	5.40	37.8	6.42	40.4	6.97	43.1	7.54	48.3	8.76	53.6	10.1
	27	27.3	4.72	32.6	5.72	37.8	6.83	40.4	7.42	43.1	8.03	48.3	9.3	53.6	10.8
	29	27.3	5.00	32.6	6.08	37.8	7.26	40.4	7.89	43.1	8.55	48.3	10.0	53.6	11.5
	31	27.3	5.30	32.6	6.44	37.8	7.71	40.4	8.39	43.1	9.1	48.3	10.6	53.6	12.2
	33	27.3	5.61	32.6	6.83	37.8	8.18	40.4	8.91	43.1	9.7	48.3	11.3	53.6	13.0
	35	27.3	5.93	32.6	7.24	37.8	8.68	40.4	9.5	43.1	10.3	48.3	12.0	53.6	13.9
	37	27.3	6.26	32.6	7.66	37.8	9.2	40.4	10.0	43.1	10.9	48.3	12.7	53.6	14.7
	39	27.3	6.62	32.6	8.11	37.8	9.8	40.4	10.6	43.1	11.6	48.3	13.5	53.6	15.7
50 (300)	10	22.7	3.49	27.1	4.04	31.5	4.62	33.7	4.93	35.9	5.24	40.3	5.88	44.7	6.56
	12	22.7	3.54	27.1	4.10	31.5	4.70	33.7	5.01	35.9	5.32	40.3	5.98	44.7	6.67
	14	22.7	3.58	27.1	4.16	31.5	4.77	33.7	5.09	35.9	5.41	40.3	6.09	44.7	6.79
	16	22.7	3.63	27.1	4.22	31.5	4.84	33.7	5.17	35.9	5.50	40.3	6.19	44.7	6.91
	18	22.7	3.68	27.1	4.28	31.5	4.92	33.7	5.26	35.9	5.60	40.3	6.30	44.7	7.04
	20	22.7	3.74	27.1	4.35	31.5	5.01	33.7	5.35	35.9	5.70	40.3	6.42	44.7	7.17
	21	22.7	3.76	27.1	4.39	31.5	5.05	33.7	5.39	35.9	5.75	40.3	6.48	44.7	7.24
	23	22.7	3.82	27.1	4.46	31.5	5.14	33.7	5.49	35.9	5.85	40.3	6.60	44.7	7.40
	25	22.7	3.88	27.1	4.53	31.5	5.23	33.7	5.60	35.9	6.03	40.3	6.93	44.7	7.90
	27	22.7	3.94	27.1	4.69	31.5	5.52	33.7	5.96	35.9	6.41	40.3	7.38	44.7	8.42
	29	22.7	4.17	27.1	4.97	31.5	5.86	33.7	6.33	35.9	6.81	40.3	7.85	44.7	8.96
	31	22.7	4.40	27.1	5.26	31.5	6.21	33.7	6.71	35.9	7.23	40.3	8.34	44.7	9.5
	33	22.7	4.65	27.1	5.57	31.5	6.58	33.7	7.12	35.9	7.68	40.3	8.86	44.7	10.1
	35	22.7	4.91	27.1	5.89	31.5	6.97	33.7	7.54	35.9	8.14	40.3	9.4	44.7	10.8
	37	22.7	5.18	27.1	6.22	31.5	7.37	33.7	7.99	35.9	8.63	40.3	10.0	44.7	11.4
	39	22.7	5.46	27.1	6.57	31.5	7.80	33.7	8.46	35.9	9.1	40.3	10.6	44.7	12.2

TC Total capacity ; kW
PI Power Input ; kW(Comp.+Outdoor fan motor)
Note1: The above table shows the average value of conditions which may occur.

RXQ26PY1 [50Hz]

Cooling capacity

Combination(%) (Capacity index)	Outdoor air temp. °CDB	Indoor air temp. 14.0°CWB TC kW	14.0°CWB PI kW	16.0°CWB TC kW	16.0°CWB PI kW	18.0°CWB TC kW	18.0°CWB PI kW	19.0°CWB TC kW	19.0°CWB PI kW	20.0°CWB TC kW	20.0°CWB PI kW	22.0°CWB TC kW	22.0°CWB PI kW	24.0°CWB TC kW	24.0°CWB PI kW
90 (585)	10	43.4	6.66	51.7	8.03	60.1	9.5	64.3	10.2	68.4	11.0	76.8	12.6	85.2	14.2
	12	43.4	6.78	51.7	8.18	60.1	9.7	64.3	10.4	68.4	11.2	76.8	12.8	85.2	14.4
	14	43.4	6.89	51.7	8.33	60.1	9.8	64.3	10.6	68.4	11.4	76.8	13.1	85.2	14.7
	16	43.4	7.01	51.7	8.48	60.1	10.0	64.3	10.8	68.4	11.6	76.8	13.3	85.0	15.0
	18	43.4	7.14	51.7	8.64	60.1	10.2	64.3	11.0	68.4	11.9	76.8	13.6	83.8	15.4
	20	43.4	7.27	51.7	8.81	60.1	10.4	64.3	11.3	68.4	12.3	76.8	14.6	82.7	16.2
	21	43.4	7.34	51.7	8.89	60.1	10.6	64.3	11.7	68.4	12.8	76.8	15.1	82.1	16.5
	23	43.4	7.48	51.7	9.3	60.1	11.4	64.3	12.5	68.4	13.7	76.8	16.2	80.9	17.3
	25	43.4	7.88	51.7	9.9	60.1	12.1	64.3	13.4	68.4	14.6	76.8	17.4	79.8	18.1
	27	43.4	8.39	51.7	10.5	60.1	13.0	64.3	14.3	68.4	15.6	76.8	18.6	78.6	18.8
	29	43.4	8.92	51.7	11.2	60.1	13.8	64.3	15.2	68.4	16.7	75.9	19.4	77.5	19.6
	31	43.4	9.5	51.7	12.0	60.1	14.7	64.3	16.2	68.4	17.8	74.7	20.2	76.3	20.3
	33	43.4	10.1	51.7	12.7	60.1	15.7	64.3	17.3	68.4	19.0	73.6	20.9	75.1	21.1
	35	43.4	10.7	51.7	13.5	60.1	16.7	64.3	18.5	68.4	20.3	72.4	21.7	74.0	21.9
	37	43.4	11.4	51.7	14.4	60.1	17.8	64.3	19.7	68.4	21.6	71.2	22.5	72.8	22.7
	39	43.4	12.0	51.7	15.3	60.1	19.0	64.3	20.9	68.4	23.0	70.1	23.2	71.7	23.4
80 (520)	10	38.5	5.91	46.0	7.08	53.4	8.32	57.1	8.96	60.8	9.6	68.3	11.0	75.7	12.4
	12	38.5	6.01	46.0	7.20	53.4	8.47	57.1	9.1	60.8	9.8	68.3	11.2	75.7	12.6
	14	38.5	6.11	46.0	7.33	53.4	8.62	57.1	9.3	60.8	10.0	68.3	11.4	75.7	12.8
	16	38.5	6.21	46.0	7.46	53.4	8.79	57.1	9.5	60.8	10.2	68.3	11.6	75.7	13.1
	18	38.5	6.32	46.0	7.60	53.4	8.95	57.1	9.7	60.8	10.4	68.3	11.8	75.7	13.3
	20	38.5	6.43	46.0	7.74	53.4	9.1	57.1	9.8	60.8	10.6	68.3	12.3	75.7	14.3
	21	38.5	6.49	46.0	7.81	53.4	9.2	57.1	9.9	60.8	10.8	68.3	12.7	75.7	14.8
	23	38.5	6.61	46.0	7.97	53.4	9.7	57.1	10.6	60.8	11.6	68.3	13.6	75.7	15.9
	25	38.5	6.82	46.0	8.48	53.4	10.3	57.1	11.3	60.8	12.4	68.3	14.6	75.7	17.0
	27	38.5	7.26	46.0	9.0	53.4	11.0	57.1	12.1	60.8	13.2	68.3	15.6	75.7	18.2
	29	38.5	7.71	46.0	9.6	53.4	11.7	57.1	12.9	60.8	14.1	68.3	16.6	75.7	19.4
	31	38.5	8.19	46.0	10.2	53.4	12.5	57.1	13.7	60.8	15.0	68.3	17.8	74.5	20.2
	33	38.5	8.69	46.0	10.9	53.4	13.3	57.1	14.6	60.8	16.0	68.3	18.9	73.4	20.9
	35	38.5	9.2	46.0	11.5	53.4	14.2	57.1	15.6	60.8	17.0	68.3	20.2	72.2	21.7
	37	38.5	9.8	46.0	12.3	53.4	15.1	57.1	16.6	60.8	18.1	68.3	21.5	71.0	22.5
	39	38.5	10.4	46.0	13.0	53.4	16.0	57.1	17.6	60.8	19.3	68.3	22.9	69.9	23.2
70 (455)	10	33.7	5.20	40.2	6.17	46.7	7.20	50.0	7.74	53.2	8.29	59.7	9.4	66.2	10.6
	12	33.7	5.28	40.2	6.27	46.7	7.33	50.0	7.88	53.2	8.44	59.7	9.6	66.2	10.8
	14	33.7	5.36	40.2	6.38	46.7	7.46	50.0	8.02	53.2	8.59	59.7	9.8	66.2	11.0
	16	33.7	5.45	40.2	6.49	46.7	7.59	50.0	8.17	53.2	8.75	59.7	10.0	66.2	11.2
	18	33.7	5.54	40.2	6.60	46.7	7.73	50.0	8.32	53.2	8.92	59.7	10.2	66.2	11.4
	20	33.7	5.63	40.2	6.72	46.7	7.88	50.0	8.48	53.2	9.1	59.7	10.4	66.2	11.8
	21	33.7	5.68	40.2	6.78	46.7	7.95	50.0	8.56	53.2	9.2	59.7	10.5	66.2	12.2
	23	33.7	5.78	40.2	6.91	46.7	8.12	50.0	8.85	53.2	9.6	59.7	11.3	66.2	13.0
	25	33.7	5.88	40.2	7.18	46.7	8.66	50.0	9.4	53.2	10.3	59.7	12.0	66.2	13.9
	27	33.7	6.22	40.2	7.64	46.7	9.2	50.0	10.1	53.2	11.0	59.7	12.9	66.2	14.9
	29	33.7	6.60	40.2	8.13	46.7	9.8	50.0	10.7	53.2	11.7	59.7	13.7	66.2	15.9
	31	33.7	7.00	40.2	8.63	46.7	10.4	50.0	11.4	53.2	12.4	59.7	14.6	66.2	17.0
	33	33.7	7.41	40.2	9.2	46.7	11.1	50.0	12.2	53.2	13.2	59.7	15.6	66.2	18.1
	35	33.7	7.85	40.2	9.7	46.7	11.8	50.0	12.9	53.2	14.1	59.7	16.6	66.2	19.3
	37	33.7	8.31	40.2	10.3	46.7	12.5	50.0	13.7	53.2	15.0	59.7	17.7	66.2	20.6
	39	33.7	8.79	40.2	10.9	46.7	13.3	50.0	14.6	53.2	15.9	59.7	18.8	66.2	21.9
60 (390)	10	28.9	4.52	34.5	5.31	40.1	6.14	42.8	6.58	45.6	7.02	51.2	7.95	56.8	8.90
	12	28.9	4.59	34.5	5.39	40.1	6.24	42.8	6.69	45.6	7.15	51.2	8.09	56.8	9.1
	14	28.9	4.65	34.5	5.48	40.1	6.35	42.8	6.80	45.6	7.27	51.2	8.23	56.8	9.2
	16	28.9	4.72	34.5	5.56	40.1	6.46	42.8	6.92	45.6	7.40	51.2	8.38	56.8	9.4
	18	28.9	4.80	34.5	5.66	40.1	6.57	42.8	7.05	45.6	7.54	51.2	8.54	56.8	9.6
	20	28.9	4.87	34.5	5.75	40.1	6.69	42.8	7.18	45.6	7.68	51.2	8.71	56.8	9.8
	21	28.9	4.91	34.5	5.80	40.1	6.75	42.8	7.24	45.6	7.75	51.2	8.79	56.8	9.9
	23	28.9	4.99	34.5	5.90	40.1	6.88	42.8	7.38	45.6	7.90	51.2	9.1	56.8	10.5
	25	28.9	5.07	34.5	6.01	40.1	7.14	42.8	7.76	45.6	8.40	51.2	9.8	56.8	11.2
	27	28.9	5.26	34.5	6.37	40.1	7.60	42.8	8.26	45.6	8.94	51.2	10.4	56.8	12.0
	29	28.9	5.57	34.5	6.77	40.1	8.08	42.8	8.79	45.6	9.5	51.2	11.1	56.8	12.8
	31	28.9	5.90	34.5	7.18	40.1	8.58	42.8	9.3	45.6	10.1	51.2	11.8	56.8	13.6
	33	28.9	6.24	34.5	7.61	40.1	9.1	42.8	9.9	45.6	10.8	51.2	12.6	56.8	14.5
	35	28.9	6.60	34.5	8.06	40.1	9.7	42.8	10.5	45.6	11.4	51.2	13.4	56.8	15.4
	37	28.9	6.97	34.5	8.53	40.1	10.3	42.8	11.2	45.6	12.1	51.2	14.2	56.8	16.4
	39	28.9	7.37	34.5	9.0	40.1	10.9	42.8	11.9	45.6	12.9	51.2	15.1	56.8	17.5
50 (325)	10	24.1	3.89	28.7	4.50	33.4	5.15	35.7	5.49	38.0	5.83	42.7	6.55	47.3	7.30
	12	24.1	3.94	28.7	4.56	33.4	5.23	35.7	5.57	38.0	5.93	42.7	6.66	47.3	7.42
	14	24.1	3.99	28.7	4.63	33.4	5.31	35.7	5.66	38.0	6.03	42.7	6.78	47.3	7.56
	16	24.1	4.04	28.7	4.70	33.4	5.39	35.7	5.76	38.0	6.13	42.7	6.89	47.3	7.69
	18	24.1	4.10	28.7	4.77	33.4	5.48	35.7	5.85	38.0	6.23	42.7	7.02	47.3	7.84
	20	24.1	4.16	28.7	4.84	33.4	5.57	35.7	5.95	38.0	6.34	42.7	7.15	47.3	7.98
	21	24.1	4.19	28.7	4.88	33.4	5.62	35.7	6.00	38.0	6.40	42.7	7.21	47.3	8.06
	23	24.1	4.25	28.7	4.96	33.4	5.72	35.7	6.11	38.0	6.52	42.7	7.35	47.3	8.24
	25	24.1	4.32	28.7	5.05	33.4	5.82	35.7	6.24	38.0	6.71	42.7	7.72	47.3	8.79
	27	24.1	4.39	28.7	5.23	33.4	6.14	35.7	6.63	38.0	7.14	42.7	8.22	47.3	9.4
	29	24.1	4.64	28.7	5.54	33.4	6.52	35.7	7.04	38.0	7.59	42.7	8.74	47.3	10.0
	31	24.1	4.90	28.7	5.86	33.4	6.91	35.7	7.47	38.0	8.05	42.7	9.3	47.3	10.6
	33	24.1	5.18	28.7	6.20	33.4	7.32	35.7	7.92	38.0	8.55	42.7	9.9	47.3	11.3
	35	24.1	5.46	28.7	6.56	33.4	7.76	35.7	8.40	38.0	9.1	42.7	10.5	47.3	12.0
	37	24.1	5.76	28.7	6.93	33.4	8.21	35.7	8.89	38.0	9.6	42.7	11.1	47.3	12.7
	39	24.1	6.08	28.7	7.32	33.4	8.69	35.7	9.4	38.0	10.2	42.7	11.8	47.3	13.5

TC Total capacity ; kW
PI Power Input ; kW(Comp.+Outdoor fan motor)
Note1: The above table shows the average value of conditions which may occur.

Cooling capacity

Combination(%) (Capacity index)	Outdoor air temp. °CDB	Indoor air temp. 14.0°CWB TC kW	14.0°CWB PI kW	16.0°CWB TC kW	16.0°CWB PI kW	18.0°CWB TC kW	18.0°CWB PI kW	19.0°CWB TC kW	19.0°CWB PI kW	20.0°CWB TC kW	20.0°CWB PI kW	22.0°CWB TC kW	22.0°CWB PI kW	24.0°CWB TC kW	24.0°CWB PI kW
130 (845)	10	62.6	9.9	74.7	12.2	86.8	14.5	89.9	14.8	91.1	14.5	93.3	13.9	95.6	13.3
	12	62.6	10.1	74.7	12.4	86.8	14.8	88.8	14.7	89.9	14.4	92.2	13.8	94.4	13.6
	14	62.6	10.3	74.7	12.6	86.5	14.9	87.6	14.6	88.7	14.3	91.0	14.2	93.3	14.3
	16	62.6	10.5	74.7	12.9	85.3	14.9	86.4	14.8	87.6	14.8	89.8	15.0	92.1	15.1
	18	62.6	10.7	74.7	13.1	84.2	15.4	85.3	15.5	86.4	15.6	88.7	15.7	90.9	15.9
	20	62.6	10.9	74.7	14.0	83.0	16.2	84.1	16.3	85.2	16.4	87.5	16.5	89.8	16.7
	21	62.6	11.2	74.7	14.5	82.4	16.6	83.5	16.6	84.7	16.7	86.9	16.9	89.2	17.1
	23	62.6	12.0	74.7	15.5	81.2	17.3	82.4	17.4	83.5	17.5	85.8	17.7	88.0	17.9
	25	62.6	12.9	74.7	16.6	80.1	18.1	81.2	18.2	82.3	18.3	84.6	18.5	86.9	18.6
	27	62.6	13.8	74.7	17.8	78.9	18.8	80.1	18.9	81.2	19.0	83.4	19.2	85.7	19.4
	29	62.6	14.7	74.7	19.0	77.8	19.6	78.9	19.7	80.0	19.8	82.3	20.0	84.5	20.2
	31	62.6	15.7	74.3	20.1	76.6	20.4	77.7	20.5	78.9	20.6	81.1	20.8	83.4	21.0
	33	62.6	16.7	73.2	20.9	75.4	21.1	76.6	21.3	77.7	21.4	80.0	21.6	82.2	21.8
	35	62.6	17.8	72.0	21.7	74.3	21.9	75.4	22.0	76.5	22.2	78.8	22.4	81.1	22.7
	37	62.6	18.9	70.9	22.4	73.1	22.7	74.2	22.8	75.4	23.0	77.6	23.2	79.9	23.5
	39	62.6	20.2	69.7	23.2	72.0	23.5	73.1	23.6	74.2	23.8	76.5	24.0	78.7	24.3
120 (780)	10	57.8	9.1	69.0	11.1	80.1	13.2	85.7	14.3	89.6	14.9	91.7	14.3	93.8	13.7
	12	57.8	9.3	69.0	11.3	80.1	13.4	85.7	14.5	88.5	14.8	90.6	14.2	92.6	13.6
	14	57.8	9.4	69.0	11.5	80.1	13.7	85.7	14.8	87.3	14.7	89.4	14.1	91.5	14.2
	16	57.8	9.6	69.0	11.7	80.1	14.0	85.1	14.9	86.1	14.7	88.2	14.9	90.3	15.0
	18	57.8	9.8	69.0	12.0	80.1	14.5	83.9	15.4	85.0	15.5	87.1	15.6	89.2	15.8
	20	57.8	10.0	69.0	12.5	80.1	15.5	82.8	16.2	83.8	16.2	85.9	16.4	88.0	16.5
	21	57.8	10.1	69.0	12.9	80.1	16.1	82.2	16.6	83.2	16.6	85.3	16.8	87.4	16.9
	23	57.8	10.8	69.0	13.8	80.0	17.2	81.0	17.3	82.1	17.4	84.2	17.6	86.3	17.7
	25	57.8	11.5	69.0	14.8	78.8	18.0	79.9	18.1	80.9	18.1	83.0	18.3	85.1	18.5
	27	57.8	12.3	69.0	15.8	77.7	18.7	78.7	18.8	79.8	18.9	81.8	19.1	83.9	19.3
	29	57.8	13.1	69.0	16.9	76.5	19.5	77.6	19.6	78.6	19.7	80.7	19.9	82.8	20.1
	31	57.8	14.0	69.0	18.0	75.4	20.2	76.4	20.4	77.4	20.5	79.5	20.7	81.6	20.9
	33	57.8	14.9	69.0	19.2	74.2	21.0	75.2	21.1	76.3	21.2	78.4	21.4	80.4	21.7
	35	57.8	15.8	69.0	20.5	73.0	21.8	74.1	21.9	75.1	22.0	77.2	22.2	79.3	22.5
	37	57.8	16.8	69.0	21.8	71.9	22.5	72.9	22.7	74.0	22.8	76.0	23.0	78.1	23.3
	39	57.8	17.9	68.6	23.1	70.7	23.3	71.7	23.5	72.8	23.6	74.9	23.8	77.0	24.1
110 (715)	10	53.0	8.25	63.2	10.0	73.4	11.9	78.5	12.9	83.6	13.9	90.1	14.7	92.0	14.2
	12	53.0	8.40	63.2	10.2	73.4	12.2	78.5	13.1	83.6	14.1	89.0	14.7	90.9	14.1
	14	53.0	8.55	63.2	10.4	73.4	12.4	78.5	13.4	83.6	14.4	87.8	14.6	89.7	14.1
	16	53.0	8.71	63.2	10.6	73.4	12.6	78.5	13.7	83.6	14.7	86.6	14.8	88.5	14.9
	18	53.0	8.88	63.2	10.8	73.4	12.9	78.5	14.0	83.6	15.4	85.5	15.5	87.4	15.7
	20	53.0	9.1	63.2	11.1	73.4	13.6	78.5	15.1	82.4	16.1	84.3	16.3	86.2	16.4
	21	53.0	9.1	63.2	11.4	73.4	14.1	78.5	15.6	81.8	16.5	83.7	16.7	85.6	16.8
	23	53.0	9.6	63.2	12.2	73.4	15.2	78.5	16.8	80.7	17.3	82.6	17.4	84.5	17.6
	25	53.0	10.2	63.2	13.0	73.4	16.2	78.5	18.0	79.5	18.0	81.4	18.2	83.3	18.3
	27	53.0	10.9	63.2	13.9	73.4	17.4	77.4	18.7	78.3	18.8	80.2	19.0	82.2	19.1
	29	53.0	11.6	63.2	14.9	73.4	18.5	76.2	19.5	77.2	19.5	79.1	19.7	81.0	19.9
	31	53.0	12.4	63.2	15.9	73.4	19.8	75.1	20.2	76.0	20.3	77.9	20.5	79.8	20.7
	33	53.0	13.2	63.2	16.9	72.9	20.9	73.9	21.0	74.9	21.1	76.8	21.3	78.7	21.5
	35	53.0	14.0	63.2	18.0	71.8	21.6	72.7	21.7	73.7	21.9	75.6	22.1	77.5	22.3
	37	53.0	14.9	63.2	19.2	70.6	22.4	71.6	22.5	72.5	22.6	74.4	22.8	76.4	23.1
	39	53.0	15.8	63.2	20.4	69.5	23.2	70.4	23.3	71.4	23.4	73.3	23.6	75.2	23.9
100 (650)	10	48.2	7.44	57.5	9.0	66.8	10.7	71.4	11.6	76.0	12.4	85.3	14.2	90.3	14.7
	12	48.2	7.57	57.5	9.2	66.8	10.9	71.4	11.8	76.0	12.7	85.3	14.5	89.1	14.6
	14	48.2	7.71	57.5	9.4	66.8	11.1	71.4	12.0	76.0	12.9	85.3	14.7	87.9	14.5
	16	48.2	7.85	57.5	9.5	66.8	11.3	71.4	12.2	76.0	13.2	85.0	14.9	86.8	14.8
	18	48.2	7.99	57.5	9.7	66.8	11.5	71.4	12.5	76.0	13.4	83.9	15.4	85.6	15.5
	20	48.2	8.15	57.5	9.9	66.8	11.9	71.4	13.1	76.0	14.4	82.7	16.2	84.5	16.3
	21	48.2	8.22	57.5	10.0	66.8	12.3	71.4	13.6	76.0	14.9	82.1	16.5	83.9	16.7
	23	48.2	8.44	57.5	10.7	66.8	13.2	71.4	14.5	76.0	16.0	81.0	17.3	82.7	17.4
	25	48.2	9.0	57.5	11.4	66.8	14.1	71.4	15.6	76.0	17.1	79.8	18.1	81.6	18.2
	27	48.2	9.6	57.5	12.2	66.8	15.1	71.4	16.6	76.0	18.3	78.7	18.8	80.4	19.0
	29	48.2	10.2	57.5	13.0	66.8	16.1	71.4	17.8	75.8	19.4	77.5	19.6	79.2	19.7
	31	48.2	10.9	57.5	13.8	66.8	17.2	71.4	19.0	74.6	20.2	76.3	20.3	78.1	20.5
	33	48.2	11.6	57.5	14.7	66.8	18.3	71.4	20.3	73.4	20.9	75.2	21.1	76.9	21.3
	35	48.2	12.3	57.5	15.7	66.8	19.5	71.4	21.6	72.3	21.7	74.0	21.9	75.7	22.1
	37	48.2	13.1	57.5	16.7	66.8	20.8	70.2	22.4	71.1	22.5	72.8	22.7	74.6	22.9
	39	48.2	13.9	57.5	17.8	66.8	22.2	69.1	23.1	69.9	23.2	71.7	23.4	73.4	23.7

RXQ28PY1 [50Hz]

Cooling capacity

Combination(%) (Capacity index)	Outdoor air temp. °CDB	Indoor air temp. 14.0°CWB TC kW	14.0°CWB PI kW	16.0°CWB TC kW	16.0°CWB PI kW	18.0°CWB TC kW	18.0°CWB PI kW	19.0°CWB TC kW	19.0°CWB PI kW	20.0°CWB TC kW	20.0°CWB PI kW	22.0°CWB TC kW	22.0°CWB PI kW	24.0°CWB TC kW	24.0°CWB PI kW
130 (910)	10	67.6	11.2	80.6	13.7	93.6	16.3	97.0	16.6	98	16.3	101	15.6	103	14.9
	12	67.6	11.4	80.6	14.0	93.6	16.6	95.7	16.5	96.9	16.2	99	15.5	102	15.3
	14	67.6	11.6	80.6	14.2	93.3	16.8	94.5	16.5	95.7	16.1	98	16.0	101	16.1
	16	67.6	11.8	80.6	14.5	92.0	16.7	93.2	16.6	94.4	16.7	96.9	16.8	99	17.0
	18	67.6	12.1	80.6	14.8	90.8	17.4	92.0	17.5	93.2	17.5	95.6	17.7	98	17.9
	20	67.6	12.3	80.6	15.8	89.5	18.2	90.7	18.3	91.9	18.4	94.4	18.6	96.8	18.8
	21	67.6	12.7	80.6	16.3	88.9	18.6	90.1	18.7	91.3	18.8	93.7	19.0	96.2	19.2
	23	67.6	13.5	80.6	17.5	87.6	19.5	88.8	19.6	90.1	19.7	92.5	19.9	94.9	20.1
	25	67.6	14.5	80.6	18.7	86.4	20.3	87.6	20.4	88.8	20.6	91.2	20.8	93.7	21.0
	27	67.6	15.5	80.6	20.0	85.1	21.2	86.3	21.3	87.6	21.4	90.0	21.6	92.4	21.9
	29	67.6	16.5	80.6	21.4	83.9	22.1	85.1	22.2	86.3	22.3	88.7	22.5	91.2	22.8
	31	67.6	17.6	80.2	22.7	82.6	22.9	83.8	23.0	85.0	23.2	87.5	23.4	89.9	23.7
	33	67.6	18.8	78.9	23.5	81.4	23.8	82.6	23.9	83.8	24.0	86.2	24.3	88.7	24.6
	35	67.6	20.0	77.7	24.4	80.1	24.7	81.3	24.8	82.5	24.9	85.0	25.2	87.4	25.5
	37	67.6	21.3	76.4	25.2	78.9	25.5	80.1	25.7	81.3	25.8	83.7	26.1	86.2	26.4
	39	67.6	22.7	75.2	26.1	77.6	26.4	78.8	26.6	80.0	26.7	82.5	27.0	84.9	27.3
120 (840)	10	62.4	10.2	74.4	12.5	86.4	14.8	92.4	16.1	96.7	16.7	99	16.1	101	15.5
	12	62.4	10.4	74.4	12.7	86.4	15.1	92.4	16.4	95.4	16.6	97.7	16.0	100	15.4
	14	62.4	10.6	74.4	13.0	86.4	15.4	92.4	16.7	94.2	16.6	96.4	15.9	99	16.0
	16	62.4	10.8	74.4	13.2	86.4	15.7	91.8	16.8	92.9	16.6	95.2	16.7	97.4	16.9
	18	62.4	11.0	74.4	13.5	86.4	16.3	90.5	17.4	91.7	17.4	93.9	17.6	96.1	17.7
	20	62.4	11.2	74.4	14.0	86.4	17.5	89.3	18.2	90.4	18.3	92.6	18.4	94.9	18.6
	21	62.4	11.3	74.4	14.5	86.4	18.1	88.6	18.6	89.8	18.7	92.0	18.9	94.3	19.1
	23	62.4	12.1	74.4	15.5	86.3	19.4	87.4	19.5	88.5	19.6	90.8	19.7	93.0	19.9
	25	62.4	12.9	74.4	16.6	85.0	20.2	86.1	20.3	87.3	20.4	89.5	20.6	91.8	20.8
	27	62.4	13.8	74.4	17.8	83.8	21.1	84.9	21.2	86.0	21.3	88.3	21.5	90.5	21.7
	29	62.4	14.7	74.4	19.0	82.5	21.9	83.6	22.0	84.8	22.1	87.0	22.4	89.3	22.6
	31	62.4	15.7	74.4	20.3	81.3	22.8	82.4	22.9	83.5	23.0	85.8	23.2	88.0	23.5
	33	62.4	16.7	74.4	21.6	80.0	23.6	81.1	23.8	82.3	23.9	84.5	24.1	86.8	24.4
	35	62.4	17.8	74.4	23.1	78.8	24.5	79.9	24.6	81.0	24.8	83.3	25.0	85.5	25.3
	37	62.4	19.0	74.4	24.6	77.5	25.4	78.6	25.5	79.8	25.6	82.0	25.9	84.3	26.2
	39	62.4	20.2	74.0	26.0	76.3	26.2	77.4	26.4	78.5	26.5	80.7	26.8	83.0	27.1
110 (770)	10	57.2	9.28	68.2	11.3	79.2	13.4	84.7	14.5	90.2	15.6	97.2	16.6	99	16.0
	12	57.2	9.45	68.2	11.5	79.2	13.7	84.7	14.8	90.2	15.9	95.9	16.5	98.0	15.9
	14	57.2	9.6	68.2	11.7	79.2	13.9	84.7	15.1	90.2	16.2	94.7	16.4	96.7	15.9
	16	57.2	9.8	68.2	12.0	79.2	14.2	84.7	15.4	90.2	16.5	93.4	16.6	95.5	16.8
	18	57.2	10.0	68.2	12.2	79.2	14.5	84.7	15.8	90.1	17.3	92.2	17.5	94.2	17.6
	20	57.2	10.2	68.2	12.4	79.2	15.4	84.7	17.0	88.9	18.2	90.9	18.3	93.0	18.5
	21	57.2	10.3	68.2	12.8	79.2	15.9	84.7	17.6	88.2	18.6	90.3	18.7	92.4	18.9
	23	57.2	10.8	68.2	13.7	79.2	17.0	84.7	18.9	87.0	19.4	89.0	19.6	91.1	19.8
	25	57.2	11.5	68.2	14.7	79.2	18.3	84.7	20.2	85.7	20.3	87.8	20.5	89.9	20.6
	27	57.2	12.3	68.2	15.7	79.2	19.5	83.5	21.0	84.5	21.1	86.5	21.3	88.6	21.5
	29	57.2	13.1	68.2	16.7	79.2	20.9	82.2	21.9	83.2	22.0	85.3	22.2	87.4	22.4
	31	57.2	13.9	68.2	17.8	79.2	22.3	80.9	22.7	82.0	22.9	84.0	23.1	86.1	23.3
	33	57.2	14.8	68.2	19.0	78.7	23.5	79.7	23.6	80.7	23.7	82.8	23.9	84.8	24.2
	35	57.2	15.8	68.2	20.3	77.4	24.3	78.4	24.5	79.5	24.6	81.5	24.8	83.6	25.1
	37	57.2	16.8	68.2	21.6	76.2	25.2	77.2	25.3	78.2	25.5	80.3	25.7	82.3	26.0
	39	57.2	17.8	68.2	23.0	74.9	26.1	75.9	26.2	77.0	26.3	79.0	26.6	81.1	26.9
100 (700)	10	52.0	8.37	62.0	10.2	72.0	12.0	77.0	13.0	82.0	14.0	92.0	16.0	97.3	16.5
	12	52.0	8.52	62.0	10.3	72.0	12.3	77.0	13.2	82.0	14.2	92.0	16.3	96.1	16.4
	14	52.0	8.67	62.0	10.5	72.0	12.5	77.0	13.5	82.0	14.5	92.0	16.6	94.8	16.4
	16	52.0	8.83	62.0	10.7	72.0	12.7	77.0	13.8	82.0	14.8	91.7	16.8	93.6	16.6
	18	52.0	8.99	62.0	10.9	72.0	13.0	77.0	14.0	82.0	15.1	90.5	17.3	92.3	17.5
	20	52.0	9.16	62.0	11.2	72.0	13.4	77.0	14.7	82.0	16.2	89.2	18.2	91.1	18.3
	21	52.0	9.25	62.0	11.3	72.0	13.8	77.0	15.3	82.0	16.7	88.6	18.6	90.5	18.8
	23	52.0	9.50	62.0	12.0	72.0	14.8	77.0	16.4	82.0	18.0	87.3	19.5	89.2	19.6
	25	52.0	10.1	62.0	12.8	72.0	15.9	77.0	17.5	82.0	19.2	86.1	20.3	87.9	20.5
	27	52.0	10.8	62.0	13.7	72.0	17.0	77.0	18.7	82.0	20.6	84.8	21.2	86.7	21.3
	29	52.0	11.5	62.0	14.6	72.0	18.1	77.0	20.0	81.7	21.8	83.6	22.0	85.4	22.2
	31	52.0	12.2	62.0	15.6	72.0	19.3	77.0	21.4	80.4	22.7	82.3	22.9	84.2	23.1
	33	52.0	13.0	62.0	16.6	72.0	20.6	77.0	22.8	79.2	23.5	81.1	23.8	82.9	24.0
	35	52.0	13.8	62.0	17.7	72.0	22.0	77.0	24.3	77.9	24.4	79.8	24.6	81.7	24.8
	37	52.0	14.7	62.0	18.8	72.0	23.4	75.7	25.2	76.7	25.3	78.6	25.5	80.4	25.7
	39	52.0	15.6	62.0	20.0	72.0	24.9	74.5	26.0	75.4	26.1	77.3	26.4	79.2	26.6

Cooling capacity

Combination(%) (Capacity index)	Outdoor air temp. °CDB	Indoor air temp. 14.0°CWB TC kW	14.0°CWB PI kW	16.0°CWB TC kW	16.0°CWB PI kW	18.0°CWB TC kW	18.0°CWB PI kW	19.0°CWB TC kW	19.0°CWB PI kW	20.0°CWB TC kW	20.0°CWB PI kW	22.0°CWB TC kW	22.0°CWB PI kW	24.0°CWB TC kW	24.0°CWB PI kW
90 (630)	10	46.8	7.50	55.8	9.04	64.8	10.7	69.3	11.5	73.8	12.4	82.8	14.1	91.8	15.9
	12	46.8	7.62	55.8	9.20	64.8	10.9	69.3	11.7	73.8	12.6	82.8	14.4	91.8	16.2
	14	46.8	7.75	55.8	9.37	64.8	11.1	69.3	12.0	73.8	12.9	82.8	14.7	91.8	16.5
	16	46.8	7.89	55.8	9.54	64.8	11.3	69.3	12.2	73.8	13.1	82.8	15.0	91.7	16.8
	18	46.8	8.03	55.8	9.7	64.8	11.5	69.3	12.4	73.8	13.4	82.8	15.3	90.4	17.3
	20	46.8	8.18	55.8	9.9	64.8	11.7	69.3	12.7	73.8	13.9	82.8	16.4	89.2	18.2
	21	46.8	8.26	55.8	10.0	64.8	11.9	69.3	13.1	73.8	14.4	82.8	17.0	88.5	18.6
	23	46.8	8.41	55.8	10.4	64.8	12.8	69.3	14.0	73.8	15.4	82.8	18.2	87.3	19.5
	25	46.8	8.86	55.8	11.1	64.8	13.7	69.3	15.0	73.8	16.5	82.8	19.5	86.0	20.3
	27	46.8	9.44	55.8	11.9	64.8	14.6	69.3	16.0	73.8	17.6	82.8	20.9	84.8	21.2
	29	46.8	10.0	55.8	12.6	64.8	15.6	69.3	17.1	73.8	18.8	81.8	21.9	83.5	22.0
	31	46.8	10.7	55.8	13.5	64.8	16.6	69.3	18.3	73.8	20.0	80.6	22.7	82.3	22.9
	33	46.8	11.3	55.8	14.3	64.8	17.7	69.3	19.5	73.8	21.4	79.3	23.6	81.0	23.7
	35	46.8	12.0	55.8	15.2	64.8	18.8	69.3	20.8	73.8	22.8	78.1	24.4	79.8	24.6
	37	46.8	12.8	55.8	16.2	64.8	20.0	69.3	22.1	73.8	24.3	76.8	25.3	78.5	25.5
	39	46.8	13.6	55.8	17.2	64.8	21.3	69.3	23.5	73.8	25.9	75.6	26.2	77.3	26.4
80 (560)	10	41.6	6.65	49.6	7.97	57.6	9.36	61.6	10.1	65.6	10.8	73.6	12.3	81.6	13.9
	12	41.6	6.76	49.6	8.10	57.6	9.53	61.6	10.3	65.6	11.0	73.6	12.6	81.6	14.2
	14	41.6	6.87	49.6	8.25	57.6	9.7	61.6	10.5	65.6	11.2	73.6	12.8	81.6	14.4
	16	41.6	6.99	49.6	8.39	57.6	9.9	61.6	10.7	65.6	11.4	73.6	13.1	81.6	14.7
	18	41.6	7.11	49.6	8.55	57.6	10.1	61.6	10.9	65.6	11.7	73.6	13.3	81.6	15.0
	20	41.6	7.24	49.6	8.71	57.6	10.3	61.6	11.1	65.6	11.9	73.6	13.8	81.6	16.1
	21	41.6	7.30	49.6	8.79	57.6	10.4	61.6	11.2	65.6	12.1	73.6	14.3	81.6	16.6
	23	41.6	7.43	49.6	8.96	57.6	10.9	61.6	11.9	65.6	13.0	73.6	15.3	81.6	17.8
	25	41.6	7.68	49.6	9.54	57.6	11.6	61.6	12.7	65.6	13.9	73.6	16.4	81.6	19.1
	27	41.6	8.17	49.6	10.2	57.6	12.4	61.6	13.6	65.6	14.8	73.6	17.5	81.6	20.4
	29	41.6	8.68	49.6	10.8	57.6	13.2	61.6	14.5	65.6	15.8	73.6	18.7	81.6	21.8
	31	41.6	9.21	49.6	11.5	57.6	14.1	61.6	15.4	65.6	16.9	73.6	20.0	80.4	22.7
	33	41.6	9.8	49.6	12.2	57.6	15.0	61.6	16.4	65.6	18.0	73.6	21.3	79.1	23.5
	35	41.6	10.4	49.6	13.0	57.6	15.9	61.6	17.5	65.6	19.2	73.6	22.7	77.9	24.4
	37	41.6	11.0	49.6	13.8	57.6	16.9	61.6	18.6	65.6	20.4	73.6	24.2	76.6	25.3
	39	41.6	11.6	49.6	14.6	57.6	18.0	61.6	19.8	65.6	21.7	73.6	25.8	75.4	26.1
70 (490)	10	36.4	5.85	43.4	6.94	50.4	8.10	53.9	8.71	57.4	9.33	64.4	10.6	71.4	11.9
	12	36.4	5.94	43.4	7.06	50.4	8.24	53.9	8.86	57.4	9.49	64.4	10.8	71.4	12.1
	14	36.4	6.03	43.4	7.18	50.4	8.39	53.9	9.02	57.4	9.7	64.4	11.0	71.4	12.4
	16	36.4	6.13	43.4	7.30	50.4	8.54	53.9	9.19	57.4	9.8	64.4	11.2	71.4	12.6
	18	36.4	6.23	43.4	7.43	50.4	8.70	53.9	9.36	57.4	10.0	64.4	11.4	71.4	12.9
	20	36.4	6.33	43.4	7.56	50.4	8.86	53.9	9.54	57.4	10.2	64.4	11.7	71.4	13.2
	21	36.4	6.39	43.4	7.63	50.4	8.95	53.9	9.6	57.4	10.3	64.4	11.8	71.4	13.7
	23	36.4	6.50	43.4	7.77	50.4	9.13	53.9	10.0	57.4	10.8	64.4	12.7	71.4	14.7
	25	36.4	6.62	43.4	8.08	50.4	9.7	53.9	10.6	57.4	11.6	64.4	13.5	71.4	15.7
	27	36.4	6.99	43.4	8.60	50.4	10.4	53.9	11.3	57.4	12.3	64.4	14.5	71.4	16.8
	29	36.4	7.42	43.4	9.14	50.4	11.0	53.9	12.1	57.4	13.1	64.4	15.4	71.4	17.9
	31	36.4	7.87	43.4	9.7	50.4	11.8	53.9	12.9	57.4	14.0	64.4	16.4	71.4	19.1
	33	36.4	8.34	43.4	10.3	50.4	12.5	53.9	13.7	57.4	14.9	64.4	17.5	71.4	20.4
	35	36.4	8.83	43.4	10.9	50.4	13.3	53.9	14.5	57.4	15.9	64.4	18.7	71.4	21.7
	37	36.4	9.35	43.4	11.6	50.4	14.1	53.9	15.4	57.4	16.9	64.4	19.9	71.4	23.1
	39	36.4	9.9	43.4	12.3	50.4	15.0	53.9	16.4	57.4	17.9	64.4	21.1	71.4	24.6
60 (420)	10	31.2	5.09	37.2	5.97	43.2	6.91	46.2	7.40	49.2	7.90	55.2	8.94	61.2	10.0
	12	31.2	5.16	37.2	6.06	43.2	7.03	46.2	7.53	49.2	8.04	55.2	9.10	61.2	10.2
	14	31.2	5.24	37.2	6.16	43.2	7.14	46.2	7.65	49.2	8.18	55.2	9.26	61.2	10.4
	16	31.2	5.31	37.2	6.26	43.2	7.27	46.2	7.79	49.2	8.33	55.2	9.43	61.2	10.6
	18	31.2	5.40	37.2	6.36	43.2	7.39	46.2	7.93	49.2	8.48	55.2	9.6	61.2	10.8
	20	31.2	5.48	37.2	6.47	43.2	7.53	46.2	8.07	49.2	8.64	55.2	9.8	61.2	11.0
	21	31.2	5.52	37.2	6.53	43.2	7.59	46.2	8.15	49.2	8.72	55.2	9.9	61.2	11.1
	23	31.2	5.61	37.2	6.64	43.2	7.74	46.2	8.30	49.2	8.89	55.2	10.3	61.2	11.8
	25	31.2	5.71	37.2	6.76	43.2	8.04	46.2	8.73	49.2	9.45	55.2	11.0	61.2	12.6
	27	31.2	5.92	37.2	7.17	43.2	8.55	46.2	9.29	49.2	10.1	55.2	11.7	61.2	13.5
	29	31.2	6.27	37.2	7.61	43.2	9.09	46.2	9.9	49.2	10.7	55.2	12.5	61.2	14.4
	31	31.2	6.64	37.2	8.07	43.2	9.7	46.2	10.5	49.2	11.4	55.2	13.3	61.2	15.3
	33	31.2	7.02	37.2	8.56	43.2	10.3	46.2	11.2	49.2	12.1	55.2	14.1	61.2	16.3
	35	31.2	7.42	37.2	9.06	43.2	10.9	46.2	11.8	49.2	12.9	55.2	15.0	61.2	17.4
	37	31.2	7.85	37.2	9.6	43.2	11.5	46.2	12.6	49.2	13.7	55.2	16.0	61.2	18.5
	39	31.2	8.29	37.2	10.2	43.2	12.2	46.2	13.3	49.2	14.5	55.2	17.0	61.2	19.6
50 (350)	10	26.0	4.37	31.0	5.06	36.0	5.79	38.5	6.17	41.0	6.56	46.0	7.37	51.0	8.21
	12	26.0	4.43	31.0	5.13	36.0	5.88	38.5	6.27	41.0	6.67	46.0	7.49	51.0	8.35
	14	26.0	4.49	31.0	5.21	36.0	5.97	38.5	6.37	41.0	6.78	46.0	7.62	51.0	8.50
	16	26.0	4.55	31.0	5.29	36.0	6.07	38.5	6.48	41.0	6.89	46.0	7.76	51.0	8.65
	18	26.0	4.61	31.0	5.37	36.0	6.17	38.5	6.58	41.0	7.01	46.0	7.89	51.0	8.81
	20	26.0	4.68	31.0	5.45	36.0	6.27	38.5	6.70	41.0	7.13	46.0	8.04	51.0	8.98
	21	26.0	4.71	31.0	5.49	36.0	6.32	38.5	6.76	41.0	7.20	46.0	8.11	51.0	9.07
	23	26.0	4.78	31.0	5.58	36.0	6.43	38.5	6.88	41.0	7.33	46.0	8.27	51.0	9.27
	25	26.0	4.86	31.0	5.68	36.0	6.55	38.5	7.02	41.0	7.55	46.0	8.68	51.0	9.9
	27	26.0	4.94	31.0	5.88	36.0	6.91	38.5	7.46	41.0	8.03	46.0	9.24	51.0	10.5
	29	26.0	5.22	31.0	6.23	36.0	7.33	38.5	7.92	41.0	8.54	46.0	9.8	51.0	11.2
	31	26.0	5.52	31.0	6.59	36.0	7.78	38.5	8.41	41.0	9.06	46.0	10.5	51.0	11.9
	33	26.0	5.82	31.0	6.98	36.0	8.24	38.5	8.91	41.0	9.6	46.0	11.1	51.0	12.7
	35	26.0	6.15	31.0	7.38	36.0	8.72	38.5	9.44	41.0	10.2	46.0	11.8	51.0	13.5
	37	26.0	6.48	31.0	7.79	36.0	9.23	38.5	10.0	41.0	10.8	46.0	12.5	51.0	14.3
	39	26.0	6.84	31.0	8.23	36.0	9.8	38.5	10.6	41.0	11.4	46.0	13.3	51.0	15.2

TC Total capacity ; kW
PI Power Input ; kW(Comp.+Outdoor fan motor)
Note1: The above table shows the average value of conditions which may occur.

RXQ30PY1 [50Hz]

Cooling capacity

Combination(%) (Capacity index)	Outdoor air temp. °CDB	Indoor air temp. 14.0°CWB TC kW	14.0°CWB PI kW	16.0°CWB TC kW	16.0°CWB PI kW	18.0°CWB TC kW	18.0°CWB PI kW	19.0°CWB TC kW	19.0°CWB PI kW	20.0°CWB TC kW	20.0°CWB PI kW	22.0°CWB TC kW	22.0°CWB PI kW	24.0°CWB TC kW	24.0°CWB PI kW
130 (975)	10	72.4	11.6	86.3	14.3	100	17.0	104	17.3	105	17.0	108	16.3	110	15.5
	12	72.4	11.9	86.3	14.5	100	17.3	103	17.2	104	16.9	106	16.1	109	15.9
	14	72.4	12.1	86.3	14.8	100	17.5	101	17.1	103	16.8	105	16.6	108	16.8
	16	72.4	12.3	86.3	15.1	99	17.4	100	17.3	101	17.4	104	17.5	106	17.7
	18	72.4	12.6	86.3	15.4	97	18.1	99	18.2	100	18.3	102	18.4	105	18.6
	20	72.4	12.8	86.3	16.4	95.9	19.0	97	19.1	99	19.2	101	19.3	104	19.5
	21	72.4	13.2	86.3	17.0	95.2	19.4	96.5	19.5	98	19.6	100	19.8	103	20.0
	23	72.4	14.1	86.3	18.2	93.9	20.3	95.2	20.4	96.5	20.5	99	20.7	102	20.9
	25	72.4	15.1	86.3	19.5	92.5	21.2	93.8	21.3	95.1	21.4	98	21.6	100	21.8
	27	72.4	16.1	86.3	20.9	91.2	22.1	92.5	22.2	93.8	22.3	96.4	22.5	99	22.8
	29	72.4	17.2	86.3	22.3	89.9	23.0	91.2	23.1	92.5	23.2	95.1	23.5	98	23.7
	31	72.4	18.3	85.9	23.6	88.5	23.9	89.8	24.0	91.1	24.1	93.7	24.4	96.3	24.6
	33	72.4	19.5	84.6	24.5	87.2	24.8	88.5	24.9	89.8	25.0	92.4	25.3	95.0	25.6
	35	72.4	20.8	83.2	25.4	85.8	25.7	87.1	25.8	88.4	26.0	91.0	26.3	93.7	26.5
	37	72.4	22.2	81.9	26.3	84.5	26.6	85.8	26.7	87.1	26.9	89.7	27.2	92.3	27.5
	39	72.4	23.6	80.5	27.2	83.1	27.5	84.4	27.7	85.8	27.8	88.4	28.1	91.0	28.5
120 (900)	10	66.8	10.6	79.7	13.0	92.6	15.5	99	16.7	104	17.4	106	16.8	108	16.1
	12	66.8	10.8	79.7	13.2	92.6	15.8	99	17.0	102	17.3	105	16.7	107	16.0
	14	66.8	11.0	79.7	13.5	92.6	16.1	99	17.4	101	17.2	103	16.6	106	16.7
	16	66.8	11.2	79.7	13.8	92.6	16.4	98	17.5	100	17.3	102	17.4	104	17.6
	18	66.8	11.5	79.7	14.0	92.6	16.9	97.0	18.1	98	18.1	101	18.3	103	18.5
	20	66.8	11.7	79.7	14.6	92.6	18.2	95.7	18.9	96.9	19.0	99	19.2	102	19.4
	21	66.8	11.8	79.7	15.1	92.6	18.9	95.0	19.4	96.2	19.5	99	19.7	101	19.8
	23	66.8	12.6	79.7	16.2	92.4	20.2	93.6	20.3	94.8	20.4	97	20.6	100	20.7
	25	66.8	13.5	79.7	17.3	91.1	21.1	92.3	21.2	93.5	21.3	95.9	21.5	98	21.7
	27	66.8	14.4	79.7	18.5	89.8	21.9	91.0	22.0	92.2	22.2	94.6	22.4	97.0	22.6
	29	66.8	15.3	79.7	19.8	88.4	22.8	89.6	22.9	90.8	23.1	93.2	23.3	95.6	23.5
	31	66.8	16.4	79.7	21.1	87.1	23.7	88.3	23.8	89.5	24.0	91.9	24.2	94.3	24.4
	33	66.8	17.4	79.7	22.5	85.7	24.6	86.9	24.7	88.1	24.9	90.5	25.1	93.0	25.4
	35	66.8	18.5	79.7	24.0	84.4	25.5	85.6	25.6	86.8	25.8	89.2	26.0	91.6	26.3
	37	66.8	19.7	79.7	25.6	83.0	26.4	84.2	26.6	85.5	26.7	87.9	27.0	90.3	27.3
	39	66.8	21.0	79.3	27.0	81.7	27.3	82.9	27.5	84.1	27.6	86.5	27.9	88.9	28.2
110 (825)	10	61.2	9.7	73.0	11.8	84.8	14.0	90.8	15.1	96.7	16.3	104	17.3	106	16.7
	12	61.2	9.8	73.0	12.0	84.8	14.2	90.8	15.4	96.7	16.6	103	17.2	105	16.6
	14	61.2	10.0	73.0	12.2	84.8	14.5	90.8	15.7	96.7	16.9	101	17.1	104	16.6
	16	61.2	10.2	73.0	12.5	84.8	14.8	90.8	16.0	96.7	17.2	100	17.3	102	17.4
	18	61.2	10.4	73.0	12.7	84.8	15.1	90.8	16.4	96.6	18.0	99	18.2	101	18.3
	20	61.2	10.6	73.0	12.9	84.8	16.0	90.8	17.7	95.2	18.9	97	19.1	100	19.2
	21	61.2	10.7	73.0	13.3	84.8	16.6	90.8	18.3	94.5	19.4	96.8	19.5	99	19.7
	23	61.2	11.2	73.0	14.3	84.8	17.8	90.8	19.6	93.2	20.2	95.4	20.4	98	20.6
	25	61.2	12.0	73.0	15.3	84.8	19.0	90.8	21.0	91.9	21.1	94.1	21.3	96.3	21.5
	27	61.2	12.8	73.0	16.3	84.8	20.3	89.4	21.9	90.5	22.0	92.7	22.2	94.9	22.4
	29	61.2	13.6	73.0	17.4	84.8	21.7	88.1	22.8	89.2	22.9	91.4	23.1	93.6	23.3
	31	61.2	14.5	73.0	18.6	84.8	23.2	86.7	23.7	87.8	23.8	90.0	24.0	92.2	24.2
	33	61.2	15.4	73.0	19.8	84.3	24.5	85.4	24.6	86.5	24.7	88.7	24.9	90.9	25.2
	35	61.2	16.4	73.0	21.1	82.9	25.3	84.0	25.5	85.1	25.6	87.4	25.8	89.6	26.1
	37	61.2	17.4	73.0	22.5	81.6	26.2	82.7	26.4	83.8	26.5	86.0	26.8	88.2	27.0
	39	61.2	18.5	73.0	23.9	80.3	27.1	81.4	27.3	82.5	27.4	84.7	27.7	86.9	28.0
100 (750)	10	55.7	8.7	66.4	10.6	77.1	12.5	82.5	13.5	87.9	14.6	99	16.6	104	17.2
	12	55.7	8.9	66.4	10.8	77.1	12.8	82.5	13.8	87.9	14.8	99	16.9	103	17.1
	14	55.7	9.0	66.4	11.0	77.1	13.0	82.5	14.1	87.9	15.1	99	17.3	102	17.0
	16	55.7	9.2	66.4	11.2	77.1	13.3	82.5	14.3	87.9	15.4	98	17.5	100	17.3
	18	55.7	9.4	66.4	11.4	77.1	13.5	82.5	14.6	87.9	15.7	96.9	18.1	99	18.2
	20	55.7	9.5	66.4	11.6	77.1	13.9	82.5	15.3	87.9	16.8	95.6	18.9	98	19.1
	21	55.7	9.6	66.4	11.7	77.1	14.4	82.5	15.9	87.9	17.4	94.9	19.4	96.9	19.5
	23	55.7	9.9	66.4	12.5	77.1	15.4	82.5	17.0	87.9	18.7	93.6	20.3	95.6	20.4
	25	55.7	10.6	66.4	13.4	77.1	16.5	82.5	18.2	87.9	20.0	92.2	21.2	94.2	21.3
	27	55.7	11.2	66.4	14.3	77.1	17.7	82.5	19.5	87.9	21.4	90.9	22.0	92.9	22.2
	29	55.7	12.0	66.4	15.2	77.1	18.9	82.5	20.8	87.5	22.7	89.5	22.9	91.5	23.1
	31	55.7	12.7	66.4	16.2	77.1	20.1	82.5	22.2	86.2	23.6	88.2	23.8	90.2	24.0
	33	55.7	13.5	66.4	17.3	77.1	21.5	82.5	23.7	84.8	24.5	86.9	24.7	88.9	24.9
	35	55.7	14.4	66.4	18.4	77.1	22.9	82.5	25.3	83.5	25.4	85.5	25.6	87.5	25.9
	37	55.7	15.3	66.4	19.6	77.1	24.4	81.2	26.2	82.2	26.3	84.2	26.5	86.2	26.8
	39	55.7	16.2	66.4	20.8	77.1	26.0	79.8	27.1	80.8	27.2	82.8	27.5	84.8	27.7

Cooling capacity

Combination(%) (Capacity index)	Outdoor air temp. °CDB	Indoor air temp. 14.0°CWB TC kW	14.0°CWB PI kW	16.0°CWB TC kW	16.0°CWB PI kW	18.0°CWB TC kW	18.0°CWB PI kW	19.0°CWB TC kW	19.0°CWB PI kW	20.0°CWB TC kW	20.0°CWB PI kW	22.0°CWB TC kW	22.0°CWB PI kW	24.0°CWB TC kW	24.0°CWB PI kW
90 (675)	10	50.1	7.80	59.8	9.4	69.4	11.1	74.3	12.0	79.1	12.9	88.7	14.7	98	16.6
	12	50.1	7.94	59.8	9.6	69.4	11.3	74.3	12.2	79.1	13.1	88.7	15.0	98	16.9
	14	50.1	8.07	59.8	9.8	69.4	11.5	74.3	12.4	79.1	13.4	88.7	15.3	98	17.2
	16	50.1	8.21	59.8	9.9	69.4	11.7	74.3	12.7	79.1	13.6	88.7	15.6	98	17.5
	18	50.1	8.36	59.8	10.1	69.4	12.0	74.3	12.9	79.1	13.9	88.7	15.9	96.9	18.1
	20	50.1	8.52	59.8	10.3	69.4	12.2	74.3	13.2	79.1	14.4	88.7	17.1	95.5	18.9
	21	50.1	8.60	59.8	10.4	69.4	12.4	74.3	13.7	79.1	14.9	88.7	17.7	94.9	19.4
	23	50.1	8.8	59.8	10.8	69.4	13.3	74.3	14.6	79.1	16.0	88.7	19.0	93.5	20.3
	25	50.1	9.2	59.8	11.6	69.4	14.2	74.3	15.6	79.1	17.1	88.7	20.3	92.2	21.1
	27	50.1	9.8	59.8	12.4	69.4	15.2	74.3	16.7	79.1	18.3	88.7	21.7	90.8	22.0
	29	50.1	10.5	59.8	13.2	69.4	16.2	74.3	17.8	79.1	19.6	87.7	22.8	89.5	22.9
	31	50.1	11.1	59.8	14.0	69.4	17.3	74.3	19.0	79.1	20.9	86.4	23.6	88.2	23.8
	33	50.1	11.8	59.8	14.9	69.4	18.4	74.3	20.3	79.1	22.3	85.0	24.5	86.8	24.7
	35	50.1	12.5	59.8	15.9	69.4	19.6	74.3	21.6	79.1	23.7	83.7	25.4	85.5	25.6
	37	50.1	13.3	59.8	16.9	69.4	20.9	74.3	23.0	79.1	25.3	82.3	26.3	84.1	26.5
	39	50.1	14.1	59.8	17.9	69.4	22.2	74.3	24.5	79.1	26.9	81.0	27.2	82.8	27.5
80 (600)	10	44.5	6.93	53.1	8.29	61.7	9.7	66.0	10.5	70.3	11.3	78.9	12.8	87.5	14.5
	12	44.5	7.04	53.1	8.44	61.7	9.9	66.0	10.7	70.3	11.5	78.9	13.1	87.5	14.7
	14	44.5	7.16	53.1	8.59	61.7	10.1	66.0	10.9	70.3	11.7	78.9	13.3	87.5	15.0
	16	44.5	7.28	53.1	8.7	61.7	10.3	66.0	11.1	70.3	11.9	78.9	13.6	87.5	15.3
	18	44.5	7.40	53.1	8.9	61.7	10.5	66.0	11.3	70.3	12.1	78.9	13.9	87.5	15.6
	20	44.5	7.53	53.1	9.1	61.7	10.7	66.0	11.5	70.3	12.4	78.9	14.4	87.5	16.7
	21	44.5	7.60	53.1	9.2	61.7	10.8	66.0	11.6	70.3	12.6	78.9	14.9	87.5	17.3
	23	44.5	7.74	53.1	9.3	61.7	11.3	66.0	12.4	70.3	13.5	78.9	15.9	87.5	18.6
	25	44.5	7.99	53.1	9.9	61.7	12.1	66.0	13.3	70.3	14.5	78.9	17.1	87.5	19.9
	27	44.5	8.50	53.1	10.6	61.7	12.9	66.0	14.1	70.3	15.5	78.9	18.2	87.5	21.3
	29	44.5	9.0	53.1	11.3	61.7	13.7	66.0	15.1	70.3	16.5	78.9	19.5	87.5	22.7
	31	44.5	9.6	53.1	12.0	61.7	14.6	66.0	16.1	70.3	17.6	78.9	20.8	86.1	23.6
	33	44.5	10.2	53.1	12.7	61.7	15.6	66.0	17.1	70.3	18.7	78.9	22.2	84.8	24.5
	35	44.5	10.8	53.1	13.5	61.7	16.6	66.0	18.2	70.3	20.0	78.9	23.6	83.4	25.4
	37	44.5	11.4	53.1	14.4	61.7	17.6	66.0	19.4	70.3	21.2	78.9	25.2	82.1	26.3
	39	44.5	12.1	53.1	15.2	61.7	18.7	66.0	20.6	70.3	22.6	78.9	26.8	80.7	27.2
70 (525)	10	39.0	6.09	46.5	7.23	54.0	8.44	57.8	9.1	61.5	9.7	69.0	11.0	76.5	12.4
	12	39.0	6.18	46.5	7.35	54.0	8.58	57.8	9.2	61.5	9.9	69.0	11.2	76.5	12.6
	14	39.0	6.28	46.5	7.47	54.0	8.7	57.8	9.4	61.5	10.1	69.0	11.5	76.5	12.9
	16	39.0	6.38	46.5	7.60	54.0	8.9	57.8	9.6	61.5	10.3	69.0	11.7	76.5	13.1
	18	39.0	6.49	46.5	7.73	54.0	9.1	57.8	9.7	61.5	10.4	69.0	11.9	76.5	13.4
	20	39.0	6.59	46.5	7.87	54.0	9.2	57.8	9.9	61.5	10.7	69.0	12.1	76.5	13.8
	21	39.0	6.65	46.5	7.94	54.0	9.3	57.8	10.0	61.5	10.8	69.0	12.3	76.5	14.3
	23	39.0	6.77	46.5	8.09	54.0	9.5	57.8	10.4	61.5	11.3	69.0	13.2	76.5	15.3
	25	39.0	6.89	46.5	8.41	54.0	10.1	57.8	11.1	61.5	12.0	69.0	14.1	76.5	16.3
	27	39.0	7.28	46.5	9.0	54.0	10.8	57.8	11.8	61.5	12.8	69.0	15.1	76.5	17.5
	29	39.0	7.73	46.5	9.5	54.0	11.5	57.8	12.6	61.5	13.7	69.0	16.1	76.5	18.6
	31	39.0	8.19	46.5	10.1	54.0	12.2	57.8	13.4	61.5	14.6	69.0	17.1	76.5	19.9
	33	39.0	8.7	46.5	10.7	54.0	13.0	57.8	14.2	61.5	15.5	69.0	18.2	76.5	21.2
	35	39.0	9.2	46.5	11.4	54.0	13.8	57.8	15.1	61.5	16.5	69.0	19.4	76.5	22.6
	37	39.0	9.7	46.5	12.1	54.0	14.7	57.8	16.1	61.5	17.5	69.0	20.7	76.5	24.1
	39	39.0	10.3	46.5	12.8	54.0	15.6	57.8	17.1	61.5	18.7	69.0	22.0	76.5	25.6
60 (450)	10	33.4	5.30	39.8	6.22	46.3	7.20	49.5	7.71	52.7	8.23	59.2	9.3	65.6	10.4
	12	33.4	5.37	39.8	6.31	46.3	7.31	49.5	7.84	52.7	8.37	59.2	9.5	65.6	10.6
	14	33.4	5.45	39.8	6.41	46.3	7.44	49.5	7.97	52.7	8.52	59.2	9.6	65.6	10.8
	16	33.4	5.53	39.8	6.52	46.3	7.56	49.5	8.11	52.7	8.7	59.2	9.8	65.6	11.0
	18	33.4	5.62	39.8	6.63	46.3	7.70	49.5	8.26	52.7	8.8	59.2	10.0	65.6	11.2
	20	33.4	5.71	39.8	6.74	46.3	7.84	49.5	8.41	52.7	9.0	59.2	10.2	65.6	11.5
	21	33.4	5.75	39.8	6.80	46.3	7.91	49.5	8.49	52.7	9.1	59.2	10.3	65.6	11.6
	23	33.4	5.85	39.8	6.92	46.3	8.05	49.5	8.6	52.7	9.3	59.2	10.7	65.6	12.3
	25	33.4	5.94	39.8	7.04	46.3	8.37	49.5	9.1	52.7	9.8	59.2	11.4	65.6	13.1
	27	33.4	6.16	39.8	7.47	46.3	8.9	49.5	9.7	52.7	10.5	59.2	12.2	65.6	14.0
	29	33.4	6.53	39.8	7.92	46.3	9.5	49.5	10.3	52.7	11.2	59.2	13.0	65.6	15.0
	31	33.4	6.91	39.8	8.40	46.3	10.1	49.5	10.9	52.7	11.9	59.2	13.8	65.6	15.9
	33	33.4	7.31	39.8	8.9	46.3	10.7	49.5	11.6	52.7	12.6	59.2	14.7	65.6	17.0
	35	33.4	7.73	39.8	9.4	46.3	11.3	49.5	12.3	52.7	13.4	59.2	15.6	65.6	18.1
	37	33.4	8.17	39.8	10.0	46.3	12.0	49.5	13.1	52.7	14.2	59.2	16.6	65.6	19.2
	39	33.4	8.6	39.8	10.6	46.3	12.7	49.5	13.9	52.7	15.1	59.2	17.7	65.6	20.4
50 (375)	10	27.8	4.55	33.2	5.27	38.6	6.03	41.3	6.43	43.9	6.83	49.3	7.67	54.7	8.55
	12	27.8	4.61	33.2	5.35	38.6	6.12	41.3	6.53	43.9	6.94	49.3	7.80	54.7	8.7
	14	27.8	4.67	33.2	5.42	38.6	6.22	41.3	6.63	43.9	7.06	49.3	7.94	54.7	8.9
	16	27.8	4.74	33.2	5.50	38.6	6.32	41.3	6.74	43.9	7.18	49.3	8.08	54.7	9.0
	18	27.8	4.80	33.2	5.59	38.6	6.42	41.3	6.85	43.9	7.30	49.3	8.22	54.7	9.2
	20	27.8	4.87	33.2	5.67	38.6	6.53	41.3	6.97	43.9	7.43	49.3	8.37	54.7	9.4
	21	27.8	4.91	33.2	5.72	38.6	6.58	41.3	7.03	43.9	7.49	49.3	8.45	54.7	9.4
	23	27.8	4.98	33.2	5.81	38.6	6.70	41.3	7.16	43.9	7.63	49.3	8.6	54.7	9.7
	25	27.8	5.06	33.2	5.91	38.6	6.82	41.3	7.31	43.9	7.86	49.3	9.0	54.7	10.3
	27	27.8	5.14	33.2	6.12	38.6	7.20	41.3	7.77	43.9	8.36	49.3	9.6	54.7	11.0
	29	27.8	5.43	33.2	6.49	38.6	7.64	41.3	8.25	43.9	8.9	49.3	10.2	54.7	11.7
	31	27.8	5.74	33.2	6.87	38.6	8.10	41.3	8.8	43.9	9.4	49.3	10.9	54.7	12.4
	33	27.8	6.06	33.2	7.26	38.6	8.58	41.3	9.3	43.9	10.0	49.3	11.6	54.7	13.2
	35	27.8	6.40	33.2	7.68	38.6	9.1	41.3	9.8	43.9	10.6	49.3	12.3	54.7	14.0
	37	27.8	6.75	33.2	8.12	38.6	9.6	41.3	10.4	43.9	11.2	49.3	13.0	54.7	14.9
	39	27.8	7.12	33.2	8.57	38.6	10.2	41.3	11.0	43.9	11.9	49.3	13.8	54.7	15.8

TC Total capacity ; kW
PI Power Input ; kW(Comp.+Outdoor fan motor)
Note1: The above table shows the average value of conditions which may occur.

RXQ32PY1 [50Hz]

Cooling capacity

Combination(%) (Capacity index)	Outdoor air temp. °CDB	Indoor air temp. 14.0°CWB TC kW	14.0°CWB PI kW	16.0°CWB TC kW	16.0°CWB PI kW	18.0°CWB TC kW	18.0°CWB PI kW	19.0°CWB TC kW	19.0°CWB PI kW	20.0°CWB TC kW	20.0°CWB PI kW	22.0°CWB TC kW	22.0°CWB PI kW	24.0°CWB TC kW	24.0°CWB PI kW
130 (1040)	10	79.0	13.1	94.2	16.0	109	19.0	113	19.4	115	19.0	118	18.2	120	17.4
	12	79.0	13.3	94.2	16.3	109	19.4	112	19.3	113	18.9	116	18.1	119	17.8
	14	79.0	13.6	94.2	16.6	109	19.6	110	19.2	112	18.8	115	18.7	118	18.9
	16	79.0	13.8	94.2	16.9	108	19.5	109	19.4	110	19.5	113	19.7	116	19.9
	18	79.0	14.1	94.2	17.3	106	20.3	107	20.4	109	20.5	112	20.7	115	20.9
	20	79.0	14.4	94.2	18.4	105	21.3	106	21.4	107	21.5	110	21.7	113	21.9
	21	79.0	14.8	94.2	19.1	104	21.8	105	21.9	107	22.0	110	22.2	112	22.4
	23	79.0	15.8	94.2	20.4	102	22.8	104	22.9	105	23.0	108	23.2	111	23.5
	25	79.0	16.9	94.2	21.9	101	23.8	102	23.9	104	24.0	107	24.3	109	24.5
	27	79.0	18.1	94.2	23.4	99.5	24.8	101	24.9	102	25.0	105	25.3	108	25.6
	29	79.0	19.3	94.2	25.0	98.0	25.8	99.4	25.9	101	26.1	104	26.3	107	26.6
	31	79.0	20.6	93.7	26.5	96.6	26.8	98.0	26.9	99.4	27.1	102	27.4	105	27.7
	33	79.0	21.9	92.2	27.5	95.1	27.8	96.5	28.0	97.9	28.1	101	28.4	104	28.7
	35	79.0	23.4	90.8	28.5	93.6	28.8	95.1	29.0	96.5	29.1	99.3	29.5	102	29.8
	37	79.0	24.9	89.3	29.5	92.2	29.8	93.6	30.0	95.0	30.2	97.9	30.5	101	30.9
	39	79.0	26.5	87.9	30.5	90.7	30.9	92.1	31.0	93.5	31.2	96.4	31.6	99.2	32.0
120 (960)	10	72.9	11.9	86.9	14.6	101	17.4	108	18.8	113	19.5	116	18.8	118	18.1
	12	72.9	12.2	86.9	14.9	101	17.7	108	19.1	112	19.4	114	18.7	117	17.9
	14	72.9	12.4	86.9	15.2	101	18.0	108	19.5	110	19.3	113	18.6	115	18.7
	16	72.9	12.6	86.9	15.4	101	18.4	107	19.6	109	19.4	111	19.6	114	19.7
	18	72.9	12.9	86.9	15.8	101	19.0	106	20.3	107	20.4	110	20.6	112	20.7
	20	72.9	13.1	86.9	16.4	101	20.4	104	21.3	106	21.4	108	21.6	111	21.8
	21	72.9	13.3	86.9	17.0	101	21.2	104	21.8	105	21.9	108	22.1	110	22.3
	23	72.9	14.2	86.9	18.2	101	22.6	102	22.8	103	22.9	106	23.1	109	23.3
	25	72.9	15.1	86.9	19.4	99.4	23.6	101	23.7	102	23.9	105	24.1	107	24.3
	27	72.9	16.2	86.9	20.8	97.9	24.6	99.2	24.7	101	24.9	103	25.1	106	25.4
	29	72.9	17.2	86.9	22.2	96.4	25.6	97.8	25.8	99.1	25.9	102	26.1	104	26.4
	31	72.9	18.4	86.9	23.7	95.0	26.6	96.3	26.8	97.6	26.9	100	27.2	103	27.4
	33	72.9	19.6	86.9	25.3	93.5	27.6	94.8	27.8	96.1	27.9	98.8	28.2	101	28.5
	35	72.9	20.8	86.9	27.0	92.1	28.6	93.4	28.8	94.7	28.9	97.3	29.2	99.9	29.5
	37	72.9	22.2	86.9	28.7	90.6	29.6	91.9	29.8	93.2	30.0	95.8	30.3	98.5	30.6
	39	72.9	23.6	86.5	30.3	89.1	30.7	90.4	30.8	91.8	31.0	94.4	31.3	97.0	31.7
110 (880)	10	66.8	10.9	79.7	13.2	92.6	15.7	99.0	17.0	105	18.2	114	19.4	116	18.7
	12	66.8	11.0	79.7	13.5	92.6	16.0	99.0	17.3	105	18.6	112	19.3	115	18.6
	14	66.8	11.2	79.7	13.7	92.6	16.3	99.0	17.6	105	18.9	111	19.2	113	18.6
	16	66.8	11.5	79.7	14.0	92.6	16.6	99.0	18.0	105	19.3	109	19.4	112	19.6
	18	66.8	11.7	79.7	14.3	92.6	16.9	99.0	18.4	105	20.2	108	20.4	110	20.6
	20	66.8	11.9	79.7	14.5	92.6	17.9	99.0	19.8	104	21.2	106	21.4	109	21.6
	21	66.8	12.0	79.7	15.0	92.6	18.6	99.0	20.5	103	21.7	106	21.9	108	22.1
	23	66.8	12.6	79.7	16.0	92.6	19.9	99.0	22.0	102	22.7	104	22.9	106	23.1
	25	66.8	13.4	79.7	17.2	92.6	21.3	99.0	23.6	100	23.7	103	23.9	105	24.1
	27	66.8	14.3	79.7	18.3	92.6	22.8	97.5	24.6	98.7	24.7	101	24.9	104	25.1
	29	66.8	15.3	79.7	19.6	92.6	24.4	96.1	25.6	97.3	25.7	99.7	25.9	102	26.2
	31	66.8	16.3	79.7	20.9	92.6	26.0	94.6	26.6	95.8	26.7	98.2	27.0	101	27.2
	33	66.8	17.3	79.7	22.2	91.9	27.5	93.1	27.6	94.4	27.7	96.8	28.0	99.2	28.2
	35	66.8	18.4	79.7	23.7	90.5	28.5	91.7	28.6	92.9	28.7	95.3	29.0	97.7	29.3
	37	66.8	19.6	79.7	25.2	89.0	29.5	90.2	29.6	91.4	29.7	93.8	30.0	96.2	30.3
	39	66.8	20.8	79.7	26.9	87.6	30.5	88.8	30.6	90.0	30.8	92.4	31.1	94.8	31.4
100 (800)	10	60.7	9.8	72.4	11.9	84.1	14.1	90.0	15.2	95.9	16.3	108	18.7	114	19.3
	12	60.7	10.0	72.4	12.1	84.1	14.3	90.0	15.5	95.9	16.6	108	19.0	112	19.2
	14	60.7	10.1	72.4	12.3	84.1	14.6	90.0	15.8	95.9	17.0	108	19.4	111	19.1
	16	60.7	10.3	72.4	12.5	84.1	14.9	90.0	16.1	95.9	17.3	107	19.6	109	19.4
	18	60.7	10.5	72.4	12.8	84.1	15.2	90.0	16.4	95.9	17.6	106	20.3	108	20.4
	20	60.7	10.7	72.4	13.0	84.1	15.6	90.0	17.2	95.9	18.9	104	21.3	106	21.4
	21	60.7	10.8	72.4	13.2	84.1	16.2	90.0	17.8	95.9	19.6	104	21.8	106	21.9
	23	60.7	11.1	72.4	14.0	84.1	17.3	90.0	19.1	95.9	21.0	102	22.7	104	22.9
	25	60.7	11.8	72.4	15.0	84.1	18.5	90.0	20.5	95.9	22.5	101	23.7	103	23.9
	27	60.7	12.6	72.4	16.0	84.1	19.8	90.0	21.9	95.9	24.0	99.1	24.7	101	24.9
	29	60.7	13.4	72.4	17.1	84.1	21.2	90.0	23.4	95.5	25.5	97.7	25.7	99.9	26.0
	31	60.7	14.3	72.4	18.2	84.1	22.6	90.0	25.0	94.0	26.5	96.2	26.7	98.4	27.0
	33	60.7	15.2	72.4	19.4	84.1	24.1	90.0	26.6	92.6	27.5	94.7	27.8	96.9	28.0
	35	60.7	16.2	72.4	20.6	84.1	25.7	90.0	28.4	91.1	28.5	93.3	28.8	95.5	29.0
	37	60.7	17.2	72.4	22.0	84.1	27.4	88.5	29.4	89.6	29.5	91.8	29.8	94.0	30.1
	39	60.7	18.2	72.4	23.4	84.1	29.1	87.1	30.4	88.2	30.5	90.4	30.8	92.5	31.1

Cooling capacity

Combination(%) (Capacity index)	Outdoor air temp. °CDB	Indoor air temp. 14.0°CWB TC kW	14.0°CWB PI kW	16.0°CWB TC kW	16.0°CWB PI kW	18.0°CWB TC kW	18.0°CWB PI kW	19.0°CWB TC kW	19.0°CWB PI kW	20.0°CWB TC kW	20.0°CWB PI kW	22.0°CWB TC kW	22.0°CWB PI kW	24.0°CWB TC kW	24.0°CWB PI kW
90 (720)	10	54.7	8.76	65.2	10.6	75.7	12.5	81.0	13.5	86.3	14.5	96.8	16.5	107	18.6
	12	54.7	8.9	65.2	10.8	75.7	12.7	81.0	13.7	86.3	14.7	96.8	16.8	107	19.0
	14	54.7	9.1	65.2	10.9	75.7	12.9	81.0	14.0	86.3	15.0	96.8	17.2	107	19.3
	16	54.7	9.2	65.2	11.1	75.7	13.2	81.0	14.2	86.3	15.3	96.8	17.5	107	19.7
	18	54.7	9.4	65.2	11.4	75.7	13.4	81.0	14.5	86.3	15.6	96.8	17.8	106	20.3
	20	54.7	9.6	65.2	11.6	75.7	13.7	81.0	14.8	86.3	16.2	96.8	19.2	104	21.3
	21	54.7	9.6	65.2	11.7	75.7	13.9	81.0	15.3	86.3	16.8	96.8	19.9	103	21.8
	23	54.7	9.8	65.2	12.2	75.7	14.9	81.0	16.4	86.3	18.0	96.8	21.3	102	22.7
	25	54.7	10.4	65.2	13.0	75.7	16.0	81.0	17.6	86.3	19.2	96.8	22.8	101	23.7
	27	54.7	11.0	65.2	13.9	75.7	17.0	81.0	18.8	86.3	20.6	96.8	24.4	99.1	24.7
	29	54.7	11.7	65.2	14.8	75.7	18.2	81.0	20.0	86.3	22.0	95.7	25.5	97.6	25.7
	31	54.7	12.5	65.2	15.7	75.7	19.4	81.0	21.4	86.3	23.4	94.2	26.5	96.2	26.7
	33	54.7	13.2	65.2	16.7	75.7	20.7	81.0	22.8	86.3	25.0	92.7	27.5	94.7	27.8
	35	54.7	14.1	65.2	17.8	75.7	22.0	81.0	24.3	86.3	26.6	91.3	28.5	93.2	28.8
	37	54.7	14.9	65.2	18.9	75.7	23.4	81.0	25.8	86.3	28.4	89.8	29.6	91.8	29.8
	39	54.7	15.8	65.2	20.1	75.7	24.9	81.0	27.5	86.3	30.2	88.3	30.6	90.3	30.8
80 (640)	10	48.6	7.78	58.0	9.3	67.3	10.9	72.0	11.8	76.7	12.6	86.0	14.4	95.4	16.3
	12	48.6	7.90	58.0	9.5	67.3	11.1	72.0	12.0	76.7	12.9	86.0	14.7	95.4	16.6
	14	48.6	8.03	58.0	9.6	67.3	11.3	72.0	12.2	76.7	13.1	86.0	15.0	95.4	16.9
	16	48.6	8.17	58.0	9.8	67.3	11.6	72.0	12.5	76.7	13.4	86.0	15.3	95.4	17.2
	18	48.6	8.31	58.0	10.0	67.3	11.8	72.0	12.7	76.7	13.6	86.0	15.6	95.4	17.5
	20	48.6	8.46	58.0	10.2	67.3	12.0	72.0	12.9	76.7	13.9	86.0	16.1	95.4	18.8
	21	48.6	8.53	58.0	10.3	67.3	12.1	72.0	13.1	76.7	14.2	86.0	16.7	95.4	19.4
	23	48.6	8.69	58.0	10.5	67.3	12.7	72.0	13.9	76.7	15.2	86.0	17.9	95.4	20.8
	25	48.6	9.0	58.0	11.1	67.3	13.6	72.0	14.9	76.7	16.2	86.0	19.2	95.4	22.3
	27	48.6	9.5	58.0	11.9	67.3	14.5	72.0	15.9	76.7	17.3	86.0	20.5	95.4	23.9
	29	48.6	10.1	58.0	12.6	67.3	15.4	72.0	16.9	76.7	18.5	86.0	21.9	95.4	25.5
	31	48.6	10.8	58.0	13.4	67.3	16.4	72.0	18.0	76.7	19.7	86.0	23.3	93.9	26.5
	33	48.6	11.4	58.0	14.3	67.3	17.5	72.0	19.2	76.7	21.0	86.0	24.9	92.5	27.5
	35	48.6	12.1	58.0	15.2	67.3	18.6	72.0	20.5	76.7	22.4	86.0	26.5	91.0	28.5
	37	48.6	12.8	58.0	16.1	67.3	19.8	72.0	21.8	76.7	23.8	86.0	28.3	89.5	29.5
	39	48.6	13.6	58.0	17.1	67.3	21.0	72.0	23.2	76.7	25.4	86.0	30.1	88.1	30.5
70 (560)	10	42.5	6.84	50.7	8.11	58.9	9.5	63.0	10.2	67.1	10.9	75.3	12.4	83.5	13.9
	12	42.5	6.94	50.7	8.25	58.9	9.6	63.0	10.4	67.1	11.1	75.3	12.6	83.5	14.2
	14	42.5	7.05	50.7	8.39	58.9	9.8	63.0	10.5	67.1	11.3	75.3	12.9	83.5	14.5
	16	42.5	7.16	50.7	8.53	58.9	10.0	63.0	10.7	67.1	11.5	75.3	13.1	83.5	14.7
	18	42.5	7.28	50.7	8.68	58.9	10.2	63.0	10.9	67.1	11.7	75.3	13.4	83.5	15.0
	20	42.5	7.40	50.7	8.8	58.9	10.4	63.0	11.1	67.1	12.0	75.3	13.6	83.5	15.5
	21	42.5	7.47	50.7	8.9	58.9	10.5	63.0	11.3	67.1	12.1	75.3	13.8	83.5	16.0
	23	42.5	7.60	50.7	9.1	58.9	10.7	63.0	11.6	67.1	12.7	75.3	14.8	83.5	17.1
	25	42.5	7.73	50.7	9.4	58.9	11.4	63.0	12.4	67.1	13.5	75.3	15.8	83.5	18.3
	27	42.5	8.17	50.7	10.0	58.9	12.1	63.0	13.2	67.1	14.4	75.3	16.9	83.5	19.6
	29	42.5	8.67	50.7	10.7	58.9	12.9	63.0	14.1	67.1	15.4	75.3	18.0	83.5	20.9
	31	42.5	9.2	50.7	11.3	58.9	13.7	63.0	15.0	67.1	16.4	75.3	19.2	83.5	22.3
	33	42.5	9.7	50.7	12.0	58.9	14.6	63.0	16.0	67.1	17.4	75.3	20.5	83.5	23.8
	35	42.5	10.3	50.7	12.8	58.9	15.5	63.0	17.0	67.1	18.5	75.3	21.8	83.5	25.4
	37	42.5	10.9	50.7	13.6	58.9	16.5	63.0	18.1	67.1	19.7	75.3	23.2	83.5	27.0
	39	42.5	11.6	50.7	14.4	58.9	17.5	63.0	19.2	67.1	20.9	75.3	24.7	83.5	28.8
60 (480)	10	36.4	5.95	43.5	6.98	50.5	8.08	54.0	8.65	57.5	9.2	64.5	10.4	71.6	11.7
	12	36.4	6.03	43.5	7.09	50.5	8.21	54.0	8.80	57.5	9.4	64.5	10.6	71.6	11.9
	14	36.4	6.12	43.5	7.20	50.5	8.35	54.0	8.9	57.5	9.6	64.5	10.8	71.6	12.1
	16	36.4	6.21	43.5	7.32	50.5	8.49	54.0	9.1	57.5	9.7	64.5	11.0	71.6	12.4
	18	36.4	6.31	43.5	7.44	50.5	8.64	54.0	9.3	57.5	9.9	64.5	11.2	71.6	12.6
	20	36.4	6.41	43.5	7.56	50.5	8.80	54.0	9.4	57.5	10.1	64.5	11.4	71.6	12.9
	21	36.4	6.46	43.5	7.63	50.5	8.9	54.0	9.5	57.5	10.2	64.5	11.6	71.6	13.0
	23	36.4	6.56	43.5	7.76	50.5	9.0	54.0	9.7	57.5	10.4	64.5	12.0	71.6	13.8
	25	36.4	6.67	43.5	7.90	50.5	9.4	54.0	10.2	57.5	11.0	64.5	12.8	71.6	14.7
	27	36.4	6.91	43.5	8.38	50.5	10.0	54.0	10.9	57.5	11.8	64.5	13.7	71.6	15.7
	29	36.4	7.33	43.5	8.9	50.5	10.6	54.0	11.6	57.5	12.5	64.5	14.6	71.6	16.8
	31	36.4	7.76	43.5	9.4	50.5	11.3	54.0	12.3	57.5	13.3	64.5	15.5	71.6	17.9
	33	36.4	8.21	43.5	10.0	50.5	12.0	54.0	13.0	57.5	14.1	64.5	16.5	71.6	19.1
	35	36.4	8.68	43.5	10.6	50.5	12.7	54.0	13.8	57.5	15.0	64.5	17.6	71.6	20.3
	37	36.4	9.2	43.5	11.2	50.5	13.5	54.0	14.7	57.5	16.0	64.5	18.7	71.6	21.6
	39	36.4	9.7	43.5	11.9	50.5	14.3	54.0	15.6	57.5	16.9	64.5	19.8	71.6	23.0
50 (400)	10	30.4	5.11	36.2	5.92	42.1	6.77	45.0	7.21	47.9	7.67	53.8	8.61	59.6	9.6
	12	30.4	5.18	36.2	6.00	42.1	6.87	45.0	7.33	47.9	7.79	53.8	8.76	59.6	9.8
	14	30.4	5.25	36.2	6.09	42.1	6.98	45.0	7.45	47.9	7.92	53.8	8.9	59.6	9.9
	16	30.4	5.32	36.2	6.18	42.1	7.09	45.0	7.57	47.9	8.06	53.8	9.1	59.6	10.1
	18	30.4	5.39	36.2	6.27	42.1	7.21	45.0	7.69	47.9	8.19	53.8	9.2	59.6	10.3
	20	30.4	5.47	36.2	6.37	42.1	7.33	45.0	7.83	47.9	8.34	53.8	9.4	59.6	10.5
	21	30.4	5.51	36.2	6.42	42.1	7.39	45.0	7.90	47.9	8.41	53.8	9.5	59.6	10.6
	23	30.4	5.59	36.2	6.53	42.1	7.52	45.0	8.04	47.9	8.57	53.8	9.7	59.6	10.8
	25	30.4	5.68	36.2	6.63	42.1	7.65	45.0	8.20	47.9	8.83	53.8	10.1	59.6	11.6
	27	30.4	5.77	36.2	6.87	42.1	8.08	45.0	8.72	47.9	9.4	53.8	10.8	59.6	12.3
	29	30.4	6.10	36.2	7.28	42.1	8.57	45.0	9.3	47.9	10.0	53.8	11.5	59.6	13.1
	31	30.4	6.45	36.2	7.71	42.1	9.1	45.0	9.8	47.9	10.6	53.8	12.2	59.6	14.0
	33	30.4	6.81	36.2	8.15	42.1	9.6	45.0	10.4	47.9	11.2	53.8	13.0	59.6	14.8
	35	30.4	7.18	36.2	8.62	42.1	10.2	45.0	11.0	47.9	11.9	53.8	13.8	59.6	15.8
	37	30.4	7.58	36.2	9.1	42.1	10.8	45.0	11.7	47.9	12.6	53.8	14.6	59.6	16.8
	39	30.4	7.99	36.2	9.6	42.1	11.4	45.0	12.4	47.9	13.4	53.8	15.5	59.6	17.8

TC Total capacity ; kW
PI Power Input ; kW(Comp.+Outdoor fan motor)
Note1: The above table shows the average value of conditions which may occur.

RXQ34PY1 [50Hz]

Cooling capacity

Combin-ation(%) (Capacity index)	Outdoor air temp. °CDB	Indoor air temp. 14.0°CWB TC kW	14.0°CWB PI kW	16.0°CWB TC kW	16.0°CWB PI kW	18.0°CWB TC kW	18.0°CWB PI kW	19.0°CWB TC kW	19.0°CWB PI kW	20.0°CWB TC kW	20.0°CWB PI kW	22.0°CWB TC kW	22.0°CWB PI kW	24.0°CWB TC kW	24.0°CWB PI kW
130 (1105)	10	82.5	14.1	98	17.2	114	20.5	118	20.9	120	20.5	123	19.7	126	18.8
	12	82.5	14.3	98	17.6	114	20.9	117	20.8	118	20.4	121	19.5	124	19.2
	14	82.5	14.6	98	17.9	114	21.2	115	20.7	117	20.3	120	20.1	123	20.3
	16	82.5	14.9	98	18.3	112	21.1	114	20.9	115	21.0	118	21.2	121	21.4
	18	82.5	15.2	98	18.6	111	21.9	112	22.0	114	22.1	117	22.3	120	22.5
	20	82.5	15.5	98	19.8	109	22.9	111	23.0	112	23.2	115	23.4	118	23.6
	21	82.5	15.9	98	20.5	108	23.5	110	23.6	111	23.7	114	23.9	117	24.2
	23	82.5	17.1	98	22.0	107	24.5	108	24.7	110	24.8	113	25.0	116	25.3
	25	82.5	18.2	98	23.6	105	25.6	107	25.7	108	25.9	111	26.1	114	26.4
	27	82.5	19.5	98	25.2	104	26.7	105	26.8	107	27.0	110	27.3	113	27.5
	29	82.5	20.8	98	27.0	102	27.8	104	27.9	105	28.1	108	28.4	111	28.7
	31	82.5	22.2	98	28.5	101	28.9	102	29.0	104	29.2	107	29.5	110	29.8
	33	82.5	23.6	96.3	29.6	99	30.0	101	30.1	102	30.3	105	30.6	108	31.0
	35	82.5	25.2	94.8	30.7	97.8	31.0	99	31.2	101	31.4	104	31.8	107	32.1
	37	82.5	26.8	93.3	31.8	96.3	32.2	97.7	32.3	99	32.5	102	32.9	105	33.3
	39	82.5	28.5	91.8	32.9	94.7	33.3	96.2	33.5	97.7	33.6	101	34.0	104	34.4
120 (1020)	10	76.1	12.9	90.8	15.7	105	18.7	113	20.2	118	21.1	121	20.3	123	19.5
	12	76.1	13.1	90.8	16.0	105	19.1	113	20.6	116	21.0	119	20.1	122	19.3
	14	76.1	13.4	90.8	16.3	105	19.4	113	21.0	115	20.8	118	20.0	120	20.2
	16	76.1	13.6	90.8	16.6	105	19.8	112	21.1	113	20.9	116	21.1	119	21.3
	18	76.1	13.9	90.8	17.0	105	20.5	111	21.9	112	22.0	115	22.1	117	22.3
	20	76.1	14.1	90.8	17.6	105	22.0	109	22.9	110	23.0	113	23.2	116	23.4
	21	76.1	14.3	90.8	18.3	105	22.8	108	23.4	110	23.6	112	23.8	115	24.0
	23	76.1	15.3	90.8	19.6	105	24.4	107	24.5	108	24.6	111	24.9	114	25.1
	25	76.1	16.3	90.8	21.0	104	25.5	105	25.6	107	25.7	109	26.0	112	26.2
	27	76.1	17.4	90.8	22.4	102	26.5	104	26.7	105	26.8	108	27.1	110	27.3
	29	76.1	18.6	90.8	23.9	101	27.6	102	27.7	103	27.9	106	28.2	109	28.4
	31	76.1	19.8	90.8	25.5	99	28.7	101	28.8	102	29.0	105	29.3	107	29.6
	33	76.1	21.1	90.8	27.2	97.7	29.8	99	29.9	100	30.1	103	30.4	106	30.7
	35	76.1	22.4	90.8	29.0	96.1	30.9	97.5	31.0	99	31.2	102	31.5	104	31.8
	37	76.1	23.9	90.8	30.9	94.6	31.9	96.0	32.1	97.4	32.3	100	32.6	103	33.0
	39	76.1	25.4	90.3	32.7	93.1	33.0	94.5	33.2	95.8	33.4	99	33.8	101	34.1
110 (935)	10	69.8	11.7	83.2	14.2	96.7	16.9	103	18.3	110	19.7	119	20.9	121	20.1
	12	69.8	11.9	83.2	14.5	96.7	17.2	103	18.6	110	20.0	117	20.8	120	20.0
	14	69.8	12.1	83.2	14.8	96.7	17.6	103	19.0	110	20.4	116	20.7	118	20.0
	16	69.8	12.3	83.2	15.1	96.7	17.9	103	19.3	110	20.8	114	20.9	117	21.1
	18	69.8	12.6	83.2	15.4	96.7	18.3	103	19.9	110	21.8	113	22.0	115	22.2
	20	69.8	12.8	83.2	15.7	96.7	19.3	103	21.4	108	22.9	111	23.1	114	23.3
	21	69.8	12.9	83.2	16.1	96.7	20.0	103	22.1	108	23.4	110	23.6	113	23.8
	23	69.8	13.6	83.2	17.3	96.7	21.5	103	23.7	106	24.5	109	24.7	111	24.9
	25	69.8	14.5	83.2	18.5	96.7	23.0	103	25.4	105	25.5	107	25.8	110	26.0
	27	69.8	15.4	83.2	19.7	96.7	24.6	102	26.5	103	26.6	106	26.9	108	27.1
	29	69.8	16.5	83.2	21.1	96.7	26.3	100	27.6	102	27.7	104	27.9	107	28.2
	31	69.8	17.5	83.2	22.5	96.7	28.1	99	28.6	100	28.8	103	29.0	105	29.3
	33	69.8	18.7	83.2	24.0	96.0	29.6	97.3	29.7	99	29.9	101	30.1	104	30.4
	35	69.8	19.8	83.2	25.5	94.5	30.7	95.8	30.8	97.0	31.0	100	31.3	102	31.6
	37	69.8	21.1	83.2	27.2	93.0	31.7	94.2	31.9	95.5	32.1	98	32.4	101	32.7
	39	69.8	22.4	83.2	28.9	91.4	32.8	92.7	33.0	94.0	33.2	96.5	33.5	99	33.8
100 (850)	10	63.4	10.5	75.7	12.8	87.9	15.1	94.0	16.4	100	17.6	112	20.1	119	20.8
	12	63.4	10.7	75.7	13.0	87.9	15.4	94.0	16.7	100	17.9	112	20.5	117	20.7
	14	63.4	10.9	75.7	13.3	87.9	15.7	94.0	17.0	100	18.3	112	20.9	116	20.6
	16	63.4	11.1	75.7	13.5	87.9	16.0	94.0	17.3	100	18.6	112	21.2	114	20.9
	18	63.4	11.3	75.7	13.8	87.9	16.3	94.0	17.7	100	19.0	110	21.8	113	22.0
	20	63.4	11.5	75.7	14.0	87.9	16.8	94.0	18.6	100	20.4	109	22.9	111	23.1
	21	63.4	11.7	75.7	14.2	87.9	17.4	94.0	19.2	100	21.1	108	23.4	110	23.6
	23	63.4	12.0	75.7	15.1	87.9	18.7	94.0	20.6	100	22.6	107	24.5	109	24.7
	25	63.4	12.8	75.7	16.2	87.9	20.0	94.0	22.0	100	24.2	105	25.6	107	25.8
	27	63.4	13.6	75.7	17.3	87.9	21.4	94.0	23.6	100	25.9	104	26.7	106	26.9
	29	63.4	14.5	75.7	18.4	87.9	22.8	94.0	25.2	100	27.5	102	27.7	104	28.0
	31	63.4	15.4	75.7	19.6	87.9	24.3	94.0	26.9	98	28.6	100	28.8	103	29.1
	33	63.4	16.4	75.7	20.9	87.9	26.0	94.0	28.7	96.7	29.7	99	29.9	101	30.2
	35	63.4	17.4	75.7	22.2	87.9	27.7	94.0	30.6	95.1	30.7	97.4	31.0	100	31.3
	37	63.4	18.5	75.7	23.7	87.9	29.5	92.5	31.7	93.6	31.8	95.9	32.1	98	32.4
	39	63.4	19.7	75.7	25.2	87.9	31.4	90.9	32.8	92.1	32.9	94.4	33.2	96.7	33.5

Cooling capacity

Combin-ation(%) (Capacity index)	Outdoor air temp. °CDB	Indoor air temp. 14.0°CWB TC kW	14.0°CWB PI kW	16.0°CWB TC kW	16.0°CWB PI kW	18.0°CWB TC kW	18.0°CWB PI kW	19.0°CWB TC kW	19.0°CWB PI kW	20.0°CWB TC kW	20.0°CWB PI kW	22.0°CWB TC kW	22.0°CWB PI kW	24.0°CWB TC kW	24.0°CWB PI kW
90 (765)	10	57.1	9.44	68.1	11.4	79.1	13.4	84.6	14.5	90.1	15.6	101	17.8	112	20.1
	12	57.1	9.60	68.1	11.6	79.1	13.7	84.6	14.8	90.1	15.9	101	18.1	112	20.4
	14	57.1	9.76	68.1	11.8	79.1	13.9	84.6	15.1	90.1	16.2	101	18.5	112	20.8
	16	57.1	9.94	68.1	12.0	79.1	14.2	84.6	15.3	90.1	16.5	101	18.9	112	21.2
	18	57.1	10.11	68.1	12.2	79.1	14.5	84.6	15.6	90.1	16.8	101	19.2	110	21.8
	20	57.1	10.30	68.1	12.5	79.1	14.8	84.6	16.0	90.1	17.5	101	20.7	109	22.9
	21	57.1	10.40	68.1	12.6	79.1	15.0	84.6	16.5	90.1	18.1	101	21.4	108	23.4
	23	57.1	10.6	68.1	13.1	79.1	16.1	84.6	17.7	90.1	19.4	101	23.0	107	24.5
	25	57.1	11.2	68.1	14.0	79.1	17.2	84.6	18.9	90.1	20.7	101	24.6	105	25.6
	27	57.1	11.9	68.1	14.9	79.1	18.4	84.6	20.2	90.1	22.1	101	26.3	104	26.7
	29	57.1	12.6	68.1	15.9	79.1	19.6	84.6	21.6	90.1	23.7	100	27.5	102	27.7
	31	57.1	13.4	68.1	17.0	79.1	20.9	84.6	23.0	90.1	25.2	98	28.6	100	28.8
	33	57.1	14.3	68.1	18.0	79.1	22.3	84.6	24.5	90.1	26.9	96.9	29.7	99	29.9
	35	57.1	15.2	68.1	19.2	79.1	23.7	84.6	26.1	90.1	28.7	95.3	30.8	97.4	31.0
	37	57.1	16.1	68.1	20.4	79.1	25.2	84.6	27.8	90.1	30.6	93.8	31.8	95.9	32.1
	39	57.1	17.1	68.1	21.7	79.1	26.8	84.6	29.6	90.1	32.6	92.3	32.9	94.3	33.2
80 (680)	10	50.8	8.38	60.5	10.03	70.3	11.8	75.2	12.7	80.1	13.6	89.9	15.5	100	17.5
	12	50.8	8.51	60.5	10.20	70.3	12.0	75.2	12.9	80.1	13.9	89.9	15.8	100	17.8
	14	50.8	8.65	60.5	10.38	70.3	12.2	75.2	13.2	80.1	14.1	89.9	16.1	100	18.2
	16	50.8	8.80	60.5	10.6	70.3	12.4	75.2	13.4	80.1	14.4	89.9	16.4	100	18.5
	18	50.8	8.95	60.5	10.8	70.3	12.7	75.2	13.7	80.1	14.7	89.9	16.8	100	18.9
	20	50.8	9.11	60.5	11.0	70.3	12.9	75.2	13.9	80.1	15.0	89.9	17.4	100	20.2
	21	50.8	9.19	60.5	11.1	70.3	13.1	75.2	14.1	80.1	15.3	89.9	18.0	100	20.9
	23	50.8	9.36	60.5	11.3	70.3	13.7	75.2	15.0	80.1	16.4	89.9	19.3	100	22.5
	25	50.8	9.67	60.5	12.0	70.3	14.6	75.2	16.0	80.1	17.5	89.9	20.6	100	24.1
	27	50.8	10.28	60.5	12.8	70.3	15.6	75.2	17.1	80.1	18.7	89.9	22.1	100	25.7
	29	50.8	10.9	60.5	13.6	70.3	16.6	75.2	18.2	80.1	19.9	89.9	23.6	100	27.5
	31	50.8	11.6	60.5	14.5	70.3	17.7	75.2	19.4	80.1	21.3	89.9	25.2	98	28.6
	33	50.8	12.3	60.5	15.4	70.3	18.8	75.2	20.7	80.1	22.7	89.9	26.8	96.6	29.6
	35	50.8	13.1	60.5	16.4	70.3	20.1	75.2	22.0	80.1	24.1	89.9	28.6	95.1	30.7
	37	50.8	13.8	60.5	17.4	70.3	21.3	75.2	23.5	80.1	25.7	89.9	30.5	93.5	31.8
	39	50.8	14.7	60.5	18.4	70.3	22.7	75.2	24.9	80.1	27.3	89.9	32.5	92.0	32.9
70 (595)	10	44.4	7.37	53.0	8.74	61.5	10.21	65.8	11.0	70.1	11.7	78.6	13.4	87.2	15.0
	12	44.4	7.48	53.0	8.89	61.5	10.38	65.8	11.2	70.1	12.0	78.6	13.6	87.2	15.3
	14	44.4	7.60	53.0	9.04	61.5	10.6	65.8	11.4	70.1	12.2	78.6	13.9	87.2	15.6
	16	44.4	7.72	53.0	9.19	61.5	10.8	65.8	11.6	70.1	12.4	78.6	14.1	87.2	15.9
	18	44.4	7.84	53.0	9.35	61.5	11.0	65.8	11.8	70.1	12.6	78.6	14.4	87.2	16.2
	20	44.4	7.98	53.0	9.52	61.5	11.2	65.8	12.0	70.1	12.9	78.6	14.7	87.2	16.6
	21	44.4	8.04	53.0	9.61	61.5	11.3	65.8	12.1	70.1	13.0	78.6	14.9	87.2	17.2
	23	44.4	8.18	53.0	9.79	61.5	11.5	65.8	12.5	70.1	13.6	78.6	16.0	87.2	18.5
	25	44.4	8.33	53.0	10.18	61.5	12.3	65.8	13.4	70.1	14.6	78.6	17.1	87.2	19.8
	27	44.4	8.81	53.0	10.8	61.5	13.1	65.8	14.3	70.1	15.5	78.6	18.2	87.2	21.1
	29	44.4	9.35	53.0	11.5	61.5	13.9	65.8	15.2	70.1	16.6	78.6	19.4	87.2	22.5
	31	44.4	9.91	53.0	12.2	61.5	14.8	65.8	16.2	70.1	17.6	78.6	20.7	87.2	24.1
	33	44.4	10.5	53.0	13.0	61.5	15.7	65.8	17.2	70.1	18.8	78.6	22.1	87.2	25.6
	35	44.4	11.1	53.0	13.8	61.5	16.7	65.8	18.3	70.1	20.0	78.6	23.5	87.2	27.3
	37	44.4	11.8	53.0	14.6	61.5	17.8	65.8	19.4	70.1	21.2	78.6	25.0	87.2	29.1
	39	44.4	12.5	53.0	15.5	61.5	18.9	65.8	20.7	70.1	22.6	78.6	26.6	87.2	31.0
60 (510)	10	38.1	6.41	45.4	7.52	52.7	8.70	56.4	9.32	60.1	9.95	67.4	11.3	74.7	12.6
	12	38.1	6.50	45.4	7.64	52.7	8.85	56.4	9.48	60.1	10.12	67.4	11.5	74.7	12.8
	14	38.1	6.59	45.4	7.76	52.7	9.00	56.4	9.64	60.1	10.30	67.4	11.7	74.7	13.1
	16	38.1	6.69	45.4	7.88	52.7	9.15	56.4	9.81	60.1	10.5	67.4	11.9	74.7	13.3
	18	38.1	6.80	45.4	8.01	52.7	9.31	56.4	9.98	60.1	10.7	67.4	12.1	74.7	13.6
	20	38.1	6.90	45.4	8.15	52.7	9.48	56.4	10.17	60.1	10.9	67.4	12.3	74.7	13.9
	21	38.1	6.96	45.4	8.22	52.7	9.56	56.4	10.26	60.1	11.0	67.4	12.5	74.7	14.0
	23	38.1	7.07	45.4	8.36	52.7	9.74	56.4	10.5	60.1	11.2	67.4	12.9	74.7	14.9
	25	38.1	7.19	45.4	8.52	52.7	10.12	56.4	11.0	60.1	11.9	67.4	13.8	74.7	15.9
	27	38.1	7.45	45.4	9.03	52.7	10.8	56.4	11.7	60.1	12.7	67.4	14.7	74.7	17.0
	29	38.1	7.89	45.4	9.58	52.7	11.4	56.4	12.4	60.1	13.5	67.4	15.7	74.7	18.1
	31	38.1	8.36	45.4	10.17	52.7	12.2	56.4	13.2	60.1	14.3	67.4	16.7	74.7	19.3
	33	38.1	8.84	45.4	10.8	52.7	12.9	56.4	14.1	60.1	15.2	67.4	17.8	74.7	20.5
	35	38.1	9.35	45.4	11.4	52.7	13.7	56.4	14.9	60.1	16.2	67.4	18.9	74.7	21.8
	37	38.1	9.88	45.4	12.1	52.7	14.5	56.4	15.8	60.1	17.2	67.4	20.1	74.7	23.2
	39	38.1	10.4	45.4	12.8	52.7	15.4	56.4	16.8	60.1	18.3	67.4	21.4	74.7	24.7
50 (425)	10	31.7	5.51	37.8	6.37	43.9	7.29	47.0	7.77	50.1	8.26	56.2	9.28	62.3	10.34
	12	31.7	5.58	37.8	6.46	43.9	7.41	47.0	7.90	50.1	8.40	56.2	9.44	62.3	10.5
	14	31.7	5.65	37.8	6.56	43.9	7.52	47.0	8.02	50.1	8.54	56.2	9.60	62.3	10.7
	16	31.7	5.73	37.8	6.66	43.9	7.64	47.0	8.15	50.1	8.68	56.2	9.77	62.3	10.9
	18	31.7	5.81	37.8	6.76	43.9	7.77	47.0	8.29	50.1	8.83	56.2	9.94	62.3	11.1
	20	31.7	5.89	37.8	6.86	43.9	7.90	47.0	8.43	50.1	8.98	56.2	10.12	62.3	11.3
	21	31.7	5.94	37.8	6.92	43.9	7.96	47.0	8.51	50.1	9.06	56.2	10.22	62.3	11.4
	23	31.7	6.02	37.8	7.03	43.9	8.10	47.0	8.66	50.1	9.23	56.2	10.4	62.3	11.7
	25	31.7	6.12	37.8	7.15	43.9	8.25	47.0	8.84	50.1	9.51	56.2	10.9	62.3	12.5
	27	31.7	6.21	37.8	7.40	43.9	8.70	47.0	9.40	50.1	10.12	56.2	11.6	62.3	13.3
	29	31.7	6.57	37.8	7.84	43.9	9.24	47.0	9.98	50.1	10.7	56.2	12.4	62.3	14.1
	31	31.7	6.95	37.8	8.30	43.9	9.79	47.0	10.6	50.1	11.4	56.2	13.2	62.3	15.0
	33	31.7	7.33	37.8	8.78	43.9	10.38	47.0	11.2	50.1	12.1	56.2	14.0	62.3	16.0
	35	31.7	7.74	37.8	9.29	43.9	11.0	47.0	11.9	50.1	12.8	56.2	14.8	62.3	17.0
	37	31.7	8.16	37.8	9.82	43.9	11.6	47.0	12.6	50.1	13.6	56.2	15.7	62.3	18.0
	39	31.7	8.61	37.8	10.37	43.9	12.3	47.0	13.3	50.1	14.4	56.2	16.7	62.3	19.2

TC Total capacity ; kW
PI Power Input ; kW(Comp.+Outdoor fan motor)
Note1: The above table shows the average value of conditions which may occur.

RXQ36PY1 [50Hz]

Cooling capacity

Combination(%) (Capacity index)	Outdoor air temp. °CDB	Indoor air temp. 14.0°CWB TC kW	14.0°CWB PI kW	16.0°CWB TC kW	16.0°CWB PI kW	18.0°CWB TC kW	18.0°CWB PI kW	19.0°CWB TC kW	19.0°CWB PI kW	20.0°CWB TC kW	20.0°CWB PI kW	22.0°CWB TC kW	22.0°CWB PI kW	24.0°CWB TC kW	24.0°CWB PI kW
130 (1170)	10	86.0	15.1	103	18.5	119	22.0	123	22.5	125	22.0	128	21.1	131	20.1
	12	86.0	15.4	103	18.8	119	22.4	122	22.3	123	21.9	126	20.9	130	20.6
	14	86.0	15.7	103	19.2	119	22.7	120	22.2	122	21.7	125	21.6	128	21.8
	16	86.0	16.0	103	19.6	117	22.6	119	22.4	120	22.5	123	22.7	126	23.0
	18	86.0	16.3	103	20.0	116	23.4	117	23.6	119	23.7	122	23.9	125	24.1
	20	86.0	16.6	103	21.3	114	24.6	115	24.7	117	24.8	120	25.1	123	25.3
	21	86.0	17.1	103	22.0	113	25.2	115	25.3	116	25.4	119	25.7	122	25.9
	23	86.0	18.3	103	23.6	112	26.3	113	26.4	115	26.6	118	26.8	121	27.1
	25	86.0	19.6	103	25.3	110	27.5	111	27.6	113	27.7	116	28.0	119	28.3
	27	86.0	20.9	103	27.0	108	28.6	110	28.8	111	28.9	115	29.2	118	29.5
	29	86.0	22.3	103	28.9	107	29.8	108	29.9	110	30.1	113	30.4	116	30.7
	31	86.0	23.8	102	30.6	105	30.9	107	31.1	108	31.3	111	31.6	114	31.9
	33	86.0	25.3	100	31.7	104	32.1	105	32.3	107	32.5	110	32.8	113	33.2
	35	86.0	27.0	99	32.9	102	33.3	104	33.5	105	33.7	108	34.0	111	34.4
	37	86.0	28.7	97	34.1	100	34.5	102	34.7	103	34.9	107	35.3	110	35.7
	39	86.0	30.6	95.7	35.2	99	35.6	100	35.9	102	36.1	105	36.5	108	36.9
120 (1080)	10	79.4	13.8	94.7	16.9	110	20.0	118	21.7	123	22.6	126	21.7	129	20.9
	12	79.4	14.1	94.7	17.2	110	20.4	118	22.1	121	22.5	124	21.6	127	20.7
	14	79.4	14.3	94.7	17.5	110	20.8	118	22.5	120	22.3	123	21.5	126	21.6
	16	79.4	14.6	94.7	17.8	110	21.2	117	22.7	118	22.4	121	22.6	124	22.8
	18	79.4	14.9	94.7	18.2	110	21.9	115	23.4	117	23.5	120	23.7	122	24.0
	20	79.4	15.2	94.7	18.9	110	23.6	114	24.6	115	24.7	118	24.9	121	25.1
	21	79.4	15.3	94.7	19.6	110	24.4	113	25.1	114	25.2	117	25.5	120	25.7
	23	79.4	16.4	94.7	21.0	110	26.2	111	26.3	113	26.4	116	26.7	118	26.9
	25	79.4	17.5	94.7	22.5	108	27.3	110	27.4	111	27.6	114	27.8	117	28.1
	27	79.4	18.7	94.7	24.0	107	28.4	108	28.6	109	28.7	112	29.0	115	29.3
	29	79.4	19.9	94.7	25.6	105	29.6	106	29.7	108	29.9	111	30.2	114	30.5
	31	79.4	21.2	94.7	27.4	103	30.7	105	30.9	106	31.1	109	31.4	112	31.7
	33	79.4	22.6	94.7	29.2	102	31.9	103	32.1	105	32.2	108	32.6	110	32.9
	35	79.4	24.0	94.7	31.1	100	33.1	102	33.2	103	33.4	106	33.8	109	34.1
	37	79.4	25.6	94.7	33.2	99	34.2	100	34.4	102	34.6	104	35.0	107	35.3
	39	79.4	27.2	94.2	35.0	97	35.4	98	35.6	100	35.8	103	36.2	106	36.6
110 (990)	10	72.8	12.5	86.8	15.3	101	18.1	108	19.6	115	21.1	124	22.4	126	21.6
	12	72.8	12.8	86.8	15.5	101	18.5	108	20.0	115	21.5	122	22.3	125	21.5
	14	72.8	13.0	86.8	15.8	101	18.8	108	20.3	115	21.9	121	22.1	123	21.5
	16	72.8	13.2	86.8	16.1	101	19.2	108	20.7	115	22.3	119	22.4	122	22.6
	18	72.8	13.5	86.8	16.5	101	19.6	108	21.3	115	23.4	117	23.6	120	23.8
	20	72.8	13.7	86.8	16.8	101	20.7	108	22.9	113	24.5	116	24.7	118	24.9
	21	72.8	13.9	86.8	17.3	101	21.5	108	23.7	112	25.1	115	25.3	118	25.5
	23	72.8	14.5	86.8	18.5	101	23.0	108	25.4	111	26.2	113	26.5	116	26.7
	25	72.8	15.5	86.8	19.8	101	24.6	108	27.3	109	27.4	112	27.6	114	27.9
	27	72.8	16.6	86.8	21.2	101	26.4	106	28.4	108	28.5	110	28.8	113	29.0
	29	72.8	17.6	86.8	22.6	101	28.2	105	29.6	106	29.7	109	30.0	111	30.2
	31	72.8	18.8	86.8	24.1	101	30.1	103	30.7	104	30.8	107	31.1	110	31.4
	33	72.8	20.0	86.8	25.7	100	31.7	101	31.9	103	32.0	105	32.3	108	32.6
	35	72.8	21.3	86.8	27.4	99	32.9	100	33.0	101	33.2	104	33.5	106	33.8
	37	72.8	22.6	86.8	29.1	96.9	34.0	98	34.2	100	34.4	102	34.7	105	35.0
	39	72.8	24.0	86.8	31.0	95.3	35.2	96.6	35.4	98	35.5	101	35.9	103	36.2
100 (900)	10	66.1	11.3	78.9	13.7	91.6	16.2	98	17.5	104	18.9	117	21.6	124	22.3
	12	66.1	11.5	78.9	14.0	91.6	16.5	98	17.9	104	19.2	117	22.0	122	22.2
	14	66.1	11.7	78.9	14.2	91.6	16.9	98	18.2	104	19.6	117	22.4	121	22.1
	16	66.1	11.9	78.9	14.5	91.6	17.2	98	18.6	104	20.0	117	22.7	119	22.4
	18	66.1	12.1	78.9	14.8	91.6	17.5	98	18.9	104	20.4	115	23.4	118	23.6
	20	66.1	12.4	78.9	15.1	91.6	18.1	98	19.9	104	21.8	114	24.6	116	24.7
	21	66.1	12.5	78.9	15.2	91.6	18.7	98	20.6	104	22.6	113	25.1	115	25.3
	23	66.1	12.8	78.9	16.2	91.6	20.0	98	22.1	104	24.2	111	26.3	114	26.5
	25	66.1	13.7	78.9	17.3	91.6	21.4	98	23.6	104	26.0	110	27.4	112	27.6
	27	66.1	14.6	78.9	18.5	91.6	22.9	98	25.3	104	27.8	108	28.6	110	28.8
	29	66.1	15.5	78.9	19.7	91.6	24.4	98	27.0	104	29.5	106	29.7	109	30.0
	31	66.1	16.5	78.9	21.0	91.6	26.1	98	28.8	102	30.6	105	30.9	107	31.2
	33	66.1	17.6	78.9	22.4	91.6	27.8	98	30.8	101	31.8	103	32.1	106	32.3
	35	66.1	18.7	78.9	23.8	91.6	29.6	98	32.8	99	32.9	102	33.2	104	33.5
	37	66.1	19.8	78.9	25.4	91.6	31.6	96.4	34.0	98	34.1	100	34.4	102	34.7
	39	66.1	21.1	78.9	27.0	91.6	33.6	94.8	35.1	96.0	35.3	98	35.6	101	35.9

Cooling capacity

Combination(%) (Capacity index)	Outdoor air temp. °CDB	Indoor air temp. 14.0°CWB TC kW	14.0°CWB PI kW	16.0°CWB TC kW	16.0°CWB PI kW	18.0°CWB TC kW	18.0°CWB PI kW	19.0°CWB TC kW	19.0°CWB PI kW	20.0°CWB TC kW	20.0°CWB PI kW	22.0°CWB TC kW	22.0°CWB PI kW	24.0°CWB TC kW	24.0°CWB PI kW
90 (810)	10	59.5	10.12	71.0	12.2	82.5	14.4	88.2	15.5	93.9	16.7	105	19.1	117	21.5
	12	59.5	10.3	71.0	12.4	82.5	14.7	88.2	15.8	93.9	17.0	105	19.4	117	21.9
	14	59.5	10.5	71.0	12.6	82.5	14.9	88.2	16.1	93.9	17.3	105	19.8	117	22.3
	16	59.5	10.6	71.0	12.9	82.5	15.2	88.2	16.4	93.9	17.7	105	20.2	117	22.7
	18	59.5	10.8	71.0	13.1	82.5	15.5	88.2	16.8	93.9	18.0	105	20.6	115	23.4
	20	59.5	11.0	71.0	13.4	82.5	15.8	88.2	17.1	93.9	18.7	105	22.1	113	24.6
	21	59.5	11.1	71.0	13.5	82.5	16.1	88.2	17.7	93.9	19.4	105	22.9	113	25.1
	23	59.5	11.4	71.0	14.1	82.5	17.2	88.2	19.0	93.9	20.8	105	24.6	111	26.3
	25	59.5	12.0	71.0	15.0	82.5	18.4	88.2	20.3	93.9	22.2	105	26.3	110	27.4
	27	59.5	12.7	71.0	16.0	82.5	19.7	88.2	21.7	93.9	23.7	105	28.2	108	28.6
	29	59.5	13.5	71.0	17.1	82.5	21.0	88.2	23.1	93.9	25.4	104	29.5	106	29.7
	31	59.5	14.4	71.0	18.2	82.5	22.4	88.2	24.7	93.9	27.1	103	30.7	105	30.9
	33	59.5	15.3	71.0	19.3	82.5	23.9	88.2	26.3	93.9	28.9	101	31.8	103	32.1
	35	59.5	16.2	71.0	20.6	82.5	25.4	88.2	28.0	93.9	30.8	99	33.0	102	33.2
	37	59.5	17.2	71.0	21.9	82.5	27.0	88.2	29.8	93.9	32.8	98	34.1	100	34.4
	39	59.5	18.3	71.0	23.2	82.5	28.8	88.2	31.8	93.9	34.9	96.2	35.3	98	35.6
80 (720)	10	52.9	8.98	63.1	10.8	73.3	12.6	78.4	13.6	83.5	14.6	93.7	16.7	104	18.8
	12	52.9	9.13	63.1	10.9	73.3	12.9	78.4	13.9	83.5	14.9	93.7	17.0	104	19.1
	14	52.9	9.28	63.1	11.1	73.3	13.1	78.4	14.1	83.5	15.2	93.7	17.3	104	19.5
	16	52.9	9.43	63.1	11.3	73.3	13.3	78.4	14.4	83.5	15.4	93.7	17.6	104	19.9
	18	52.9	9.60	63.1	11.5	73.3	13.6	78.4	14.7	83.5	15.7	93.7	18.0	104	20.3
	20	52.9	9.77	63.1	11.8	73.3	13.9	78.4	15.0	83.5	16.1	93.7	18.6	104	21.7
	21	52.9	9.85	63.1	11.9	73.3	14.0	78.4	15.1	83.5	16.4	93.7	19.3	104	22.5
	23	52.9	10.04	63.1	12.1	73.3	14.7	78.4	16.1	83.5	17.5	93.7	20.7	104	24.1
	25	52.9	10.4	63.1	12.9	73.3	15.7	78.4	17.2	83.5	18.8	93.7	22.1	104	25.8
	27	52.9	11.0	63.1	13.7	73.3	16.7	78.4	18.3	83.5	20.0	93.7	23.7	104	27.6
	29	52.9	11.7	63.1	14.6	73.3	17.8	78.4	19.6	83.5	21.4	93.7	25.3	104	29.5
	31	52.9	12.4	63.1	15.5	73.3	19.0	78.4	20.8	83.5	22.8	93.7	27.0	102	30.6
	33	52.9	13.2	63.1	16.5	73.3	20.2	78.4	22.2	83.5	24.3	93.7	28.8	101	31.8
	35	52.9	14.0	63.1	17.5	73.3	21.5	78.4	23.6	83.5	25.9	93.7	30.7	99	32.9
	37	52.9	14.8	63.1	18.6	73.3	22.9	78.4	25.1	83.5	27.5	93.7	32.7	98	34.1
	39	52.9	15.7	63.1	19.8	73.3	24.3	78.4	26.7	83.5	29.3	93.7	34.8	95.9	35.3
70 (630)	10	46.3	7.90	55.2	9.37	64.1	10.9	68.6	11.8	73.1	12.6	82.0	14.3	90.9	16.1
	12	46.3	8.02	55.2	9.53	64.1	11.1	68.6	12.0	73.1	12.8	82.0	14.6	90.9	16.4
	14	46.3	8.14	55.2	9.69	64.1	11.3	68.6	12.2	73.1	13.0	82.0	14.8	90.9	16.7
	16	46.3	8.27	55.2	9.85	64.1	11.5	68.6	12.4	73.1	13.3	82.0	15.1	90.9	17.0
	18	46.3	8.41	55.2	10.02	64.1	11.7	68.6	12.6	73.1	13.5	82.0	15.4	90.9	17.4
	20	46.3	8.55	55.2	10.20	64.1	12.0	68.6	12.9	73.1	13.8	82.0	15.7	90.9	17.8
	21	46.3	8.62	55.2	10.3	64.1	12.1	68.6	13.0	73.1	13.9	82.0	16.0	90.9	18.5
	23	46.3	8.77	55.2	10.5	64.1	12.3	68.6	13.4	73.1	14.6	82.0	17.1	90.9	19.8
	25	46.3	8.93	55.2	10.9	64.1	13.1	68.6	14.3	73.1	15.6	82.0	18.3	90.9	21.2
	27	46.3	9.44	55.2	11.6	64.1	14.0	68.6	15.3	73.1	16.6	82.0	19.5	90.9	22.6
	29	46.3	10.02	55.2	12.3	64.1	14.9	68.6	16.3	73.1	17.7	82.0	20.8	90.9	24.2
	31	46.3	10.6	55.2	13.1	64.1	15.9	68.6	17.3	73.1	18.9	82.0	22.2	90.9	25.8
	33	46.3	11.3	55.2	13.9	64.1	16.9	68.6	18.5	73.1	20.1	82.0	23.7	90.9	27.5
	35	46.3	11.9	55.2	14.8	64.1	17.9	68.6	19.6	73.1	21.4	82.0	25.2	90.9	29.3
	37	46.3	12.6	55.2	15.7	64.1	19.0	68.6	20.8	73.1	22.8	82.0	26.8	90.9	31.2
	39	46.3	13.4	55.2	16.6	64.1	20.2	68.6	22.1	73.1	24.2	82.0	28.5	90.9	33.2
60 (540)	10	39.7	6.87	47.3	8.06	55.0	9.33	58.8	9.99	62.6	10.7	70.3	12.1	77.9	13.5
	12	39.7	6.97	47.3	8.19	55.0	9.48	58.8	10.16	62.6	10.8	70.3	12.3	77.9	13.8
	14	39.7	7.07	47.3	8.32	55.0	9.64	58.8	10.3	62.6	11.0	70.3	12.5	77.9	14.0
	16	39.7	7.17	47.3	8.45	55.0	9.81	58.8	10.5	62.6	11.2	70.3	12.7	77.9	14.3
	18	39.7	7.28	47.3	8.59	55.0	9.98	58.8	10.7	62.6	11.4	70.3	13.0	77.9	14.6
	20	39.7	7.40	47.3	8.74	55.0	10.16	58.8	10.9	62.6	11.7	70.3	13.2	77.9	14.8
	21	39.7	7.46	47.3	8.81	55.0	10.3	58.8	11.0	62.6	11.8	70.3	13.4	77.9	15.0
	23	39.7	7.58	47.3	8.97	55.0	10.4	58.8	11.2	62.6	12.0	70.3	13.9	77.9	15.9
	25	39.7	7.71	47.3	9.13	55.0	10.8	58.8	11.8	62.6	12.8	70.3	14.8	77.9	17.0
	27	39.7	7.99	47.3	9.68	55.0	11.5	58.8	12.5	62.6	13.6	70.3	15.8	77.9	18.2
	29	39.7	8.46	47.3	10.3	55.0	12.3	58.8	13.3	62.6	14.5	70.3	16.8	77.9	19.4
	31	39.7	8.96	47.3	10.9	55.0	13.0	58.8	14.2	62.6	15.4	70.3	17.9	77.9	20.7
	33	39.7	9.48	47.3	11.5	55.0	13.8	58.8	15.1	62.6	16.3	70.3	19.1	77.9	22.0
	35	39.7	10.02	47.3	12.2	55.0	14.7	58.8	16.0	62.6	17.4	70.3	20.3	77.9	23.4
	37	39.7	10.6	47.3	13.0	55.0	15.6	58.8	17.0	62.6	18.4	70.3	21.6	77.9	24.9
	39	39.7	11.2	47.3	13.7	55.0	16.5	58.8	18.0	62.6	19.6	70.3	22.9	77.9	26.5
50 (450)	10	33.1	5.90	39.4	6.83	45.8	7.82	49.0	8.33	52.2	8.86	58.6	9.95	64.9	11.1
	12	33.1	5.98	39.4	6.93	45.8	7.94	49.0	8.46	52.2	9.00	58.6	10.12	64.9	11.3
	14	33.1	6.06	39.4	7.03	45.8	8.06	49.0	8.60	52.2	9.15	58.6	10.3	64.9	11.5
	16	33.1	6.14	39.4	7.13	45.8	8.19	49.0	8.74	52.2	9.30	58.6	10.5	64.9	11.7
	18	33.1	6.23	39.4	7.24	45.8	8.32	49.0	8.89	52.2	9.46	58.6	10.7	64.9	11.9
	20	33.1	6.32	39.4	7.36	45.8	8.46	49.0	9.04	52.2	9.63	58.6	10.9	64.9	12.1
	21	33.1	6.36	39.4	7.42	45.8	8.54	49.0	9.12	52.2	9.72	58.6	11.0	64.9	12.2
	23	33.1	6.46	39.4	7.54	45.8	8.68	49.0	9.28	52.2	9.89	58.6	11.2	64.9	12.5
	25	33.1	6.56	39.4	7.66	45.8	8.84	49.0	9.48	52.2	10.20	58.6	11.7	64.9	13.4
	27	33.1	6.66	39.4	7.93	45.8	9.33	49.0	10.07	52.2	10.8	58.6	12.5	64.9	14.2
	29	33.1	7.05	39.4	8.41	45.8	9.90	49.0	10.7	52.2	11.5	58.6	13.3	64.9	15.2
	31	33.1	7.45	39.4	8.90	45.8	10.5	49.0	11.3	52.2	12.2	58.6	14.1	64.9	16.1
	33	33.1	7.86	39.4	9.42	45.8	11.1	49.0	12.0	52.2	13.0	58.6	15.0	64.9	17.1
	35	33.1	8.30	39.4	9.96	45.8	11.8	49.0	12.7	52.2	13.8	58.6	15.9	64.9	18.2
	37	33.1	8.75	39.4	10.5	45.8	12.5	49.0	13.5	52.2	14.6	58.6	16.9	64.9	19.3
	39	33.1	9.23	39.4	11.1	45.8	13.2	49.0	14.3	52.2	15.5	58.6	17.9	64.9	20.5

TC Total capacity ; kW
PI Power Input ; kW(Comp.+Outdoor fan motor)
Note1: The above table shows the average value of conditions which may occur.

RXQ38PY1 [50Hz]

Cooling capacity

Combination(%) (Capacity index)	Outdoor air temp. °CDB	Indoor air temp. 14.0°CWB TC kW	14.0°CWB PI kW	16.0°CWB TC kW	16.0°CWB PI kW	18.0°CWB TC kW	18.0°CWB PI kW	19.0°CWB TC kW	19.0°CWB PI kW	20.0°CWB TC kW	20.0°CWB PI kW	22.0°CWB TC kW	22.0°CWB PI kW	24.0°CWB TC kW	24.0°CWB PI kW
130 (1235)	10	92.0	14.1	110	17.2	128	20.5	132	20.9	134	20.5	137	19.7	140	18.8
	12	92.0	14.3	110	17.6	128	20.9	130	20.8	132	20.4	135	19.5	139	19.2
	14	92.0	14.6	110	17.9	127	21.2	129	20.7	130	20.3	134	20.1	137	20.3
	16	92.0	14.9	110	18.3	125	21.1	127	20.9	129	21.0	132	21.2	135	21.4
	18	92.0	15.2	110	18.6	124	21.9	125	22.0	127	22.1	130	22.3	134	22.5
	20	92.0	15.5	110	19.8	122	22.9	124	23.0	125	23.2	129	23.4	132	23.6
	21	92.0	15.9	110	20.5	121	23.5	123	23.6	124	23.7	128	23.9	131	24.2
	23	92.0	17.1	110	22.0	119	24.5	121	24.7	123	24.8	126	25.0	129	25.3
	25	92.0	18.2	110	23.6	118	25.6	119	25.7	121	25.9	124	26.1	128	26.4
	27	92.0	19.5	110	25.2	116	26.7	118	26.8	119	27.0	123	27.3	126	27.5
	29	92.0	20.8	110	27.0	114	27.8	116	27.9	118	28.1	121	28.4	124	28.7
	31	92.0	22.2	109	28.5	113	28.9	114	29.0	116	29.2	119	29.5	122	29.8
	33	92.0	23.6	108	29.6	111	30.0	112	30.1	114	30.3	117	30.6	121	31.0
	35	92.0	25.2	106	30.7	109	31.0	111	31.2	112	31.4	116	31.8	119	32.1
	37	92.0	26.8	104	31.8	107	32.2	109	32.3	111	32.5	114	32.9	117	33.3
	39	92.0	28.5	102	32.9	106	33.3	107	33.5	109	33.6	112	34.0	116	34.4
120 (1140)	10	85.0	12.9	101	15.7	118	18.7	126	20.2	132	21.1	135	20.3	138	19.5
	12	85.0	13.1	101	16.0	118	19.1	126	20.6	130	21.0	133	20.1	136	19.3
	14	85.0	13.4	101	16.3	118	19.4	126	21.0	128	20.8	131	20.0	134	20.2
	16	85.0	13.6	101	16.6	118	19.8	125	21.1	127	20.9	130	21.1	133	21.3
	18	85.0	13.9	101	17.0	118	20.5	123	21.9	125	22.0	128	22.1	131	22.3
	20	85.0	14.1	101	17.6	118	22.0	122	22.9	123	23.0	126	23.2	129	23.4
	21	85.0	14.3	101	18.3	118	22.8	121	23.4	122	23.6	125	23.8	128	24.0
	23	85.0	15.3	101	19.6	118	24.4	119	24.5	121	24.6	124	24.9	127	25.1
	25	85.0	16.3	101	21.0	116	25.5	117	25.6	119	25.7	122	26.0	125	26.2
	27	85.0	17.4	101	22.4	114	26.5	116	26.7	117	26.8	120	27.1	123	27.3
	29	85.0	18.6	101	23.9	112	27.6	114	27.7	115	27.9	119	28.2	122	28.4
	31	85.0	19.8	101	25.5	111	28.7	112	28.8	114	29.0	117	29.3	120	29.6
	33	85.0	21.1	101	27.2	109	29.8	111	29.9	112	30.1	115	30.4	118	30.7
	35	85.0	22.4	101	29.0	107	30.9	109	31.0	110	31.2	113	31.5	116	31.8
	37	85.0	23.9	101	30.9	106	31.9	107	32.1	109	32.3	112	32.6	115	33.0
	39	85.0	25.4	101	32.7	104	33.0	105	33.2	107	33.4	110	33.8	113	34.1
110 (1045)	10	77.9	11.7	92.9	14.2	108	16.9	115	18.3	123	19.7	132	20.9	135	20.1
	12	77.9	11.9	92.9	14.5	108	17.2	115	18.6	123	20.0	131	20.8	134	20.0
	14	77.9	12.1	92.9	14.8	108	17.6	115	19.0	123	20.4	129	20.7	132	20.0
	16	77.9	12.3	92.9	15.1	108	17.9	115	19.3	123	20.8	127	20.9	130	21.1
	18	77.9	12.6	92.9	15.4	108	18.3	115	19.9	123	21.8	126	22.0	128	22.2
	20	77.9	12.8	92.9	15.7	108	19.3	115	21.4	121	22.9	124	23.1	127	23.3
	21	77.9	12.9	92.9	16.1	108	20.0	115	22.1	120	23.4	123	23.6	126	23.8
	23	77.9	13.6	92.9	17.3	108	21.5	115	23.7	119	24.5	121	24.7	124	24.9
	25	77.9	14.5	92.9	18.5	108	23.0	115	25.4	117	25.5	120	25.8	122	26.0
	27	77.9	15.4	92.9	19.7	108	24.6	114	26.5	115	26.6	118	26.9	121	27.1
	29	77.9	16.5	92.9	21.1	108	26.3	112	27.6	113	27.7	116	27.9	119	28.2
	31	77.9	17.5	92.9	22.5	108	28.1	110	28.6	112	28.8	114	29.0	117	29.3
	33	77.9	18.7	92.9	24.0	107	29.6	109	29.7	110	29.9	113	30.1	116	30.4
	35	77.9	19.8	92.9	25.5	105	30.7	107	30.8	108	31.0	111	31.3	114	31.6
	37	77.9	21.1	92.9	27.2	104	31.7	105	31.9	107	32.1	109	32.4	112	32.7
	39	77.9	22.4	92.9	28.9	102	32.8	103	33.0	105	33.2	108	33.5	110	33.8
100 (950)	10	70.8	10.5	84.4	12.8	98	15.1	105	16.4	112	17.6	125	20.1	133	20.8
	12	70.8	10.7	84.4	13.0	98	15.4	105	16.7	112	17.9	125	20.5	131	20.7
	14	70.8	10.9	84.4	13.3	98	15.7	105	17.0	112	18.3	125	20.9	129	20.6
	16	70.8	11.1	84.4	13.5	98	16.0	105	17.3	112	18.6	125	21.2	127	20.9
	18	70.8	11.3	84.4	13.8	98	16.3	105	17.7	112	19.0	123	21.8	126	22.0
	20	70.8	11.5	84.4	14.0	98	16.8	105	18.6	112	20.4	122	22.9	124	23.1
	21	70.8	11.7	84.4	14.2	98	17.4	105	19.2	112	21.1	121	23.4	123	23.6
	23	70.8	12.0	84.4	15.1	98	18.7	105	20.6	112	22.6	119	24.5	122	24.7
	25	70.8	12.8	84.4	16.2	98	20.0	105	22.0	112	24.2	117	25.6	120	25.8
	27	70.8	13.6	84.4	17.3	98	21.4	105	23.6	112	25.9	116	26.7	118	26.9
	29	70.8	14.5	84.4	18.4	98	22.8	105	25.2	111	27.5	114	27.7	116	28.0
	31	70.8	15.4	84.4	19.6	98	24.3	105	26.9	110	28.6	112	28.8	115	29.1
	33	70.8	16.4	84.4	20.9	98	26.0	105	28.7	108	29.7	110	29.9	113	30.2
	35	70.8	17.4	84.4	22.2	98	27.7	105	30.6	106	30.7	109	31.0	111	31.3
	37	70.8	18.5	84.4	23.7	98	29.5	103	31.7	104	31.8	107	32.1	110	32.4
	39	70.8	19.7	84.4	25.2	98	31.4	101	32.8	103	32.9	105	33.2	108	33.5

Cooling capacity

Combination(%) (Capacity index)	Outdoor air temp. °CDB	Indoor air temp. 14.0°CWB TC kW	14.0°CWB PI kW	16.0°CWB TC kW	16.0°CWB PI kW	18.0°CWB TC kW	18.0°CWB PI kW	19.0°CWB TC kW	19.0°CWB PI kW	20.0°CWB TC kW	20.0°CWB PI kW	22.0°CWB TC kW	22.0°CWB PI kW	24.0°CWB TC kW	24.0°CWB PI kW
90 (855)	10	63.7	9.4	76.0	11.4	88.3	13.4	94.4	14.5	101	15.6	113	17.8	125	20.1
	12	63.7	9.6	76.0	11.6	88.3	13.7	94.4	14.8	101	15.9	113	18.1	125	20.4
	14	63.7	9.8	76.0	11.8	88.3	13.9	94.4	15.1	101	16.2	113	18.5	125	20.8
	16	63.7	9.9	76.0	12.0	88.3	14.2	94.4	15.3	101	16.5	113	18.9	125	21.2
	18	63.7	10.1	76.0	12.2	88.3	14.5	94.4	15.6	101	16.8	113	19.2	123	21.8
	20	63.7	10.3	76.0	12.5	88.3	14.8	94.4	16.0	101	17.5	113	20.7	121	22.9
	21	63.7	10.4	76.0	12.6	88.3	15.0	94.4	16.5	101	18.1	113	21.4	121	23.4
	23	63.7	10.6	76.0	13.1	88.3	16.1	94.4	17.7	101	19.4	113	23.0	119	24.5
	25	63.7	11.2	76.0	14.0	88.3	17.2	94.4	18.9	101	20.7	113	24.6	117	25.6
	27	63.7	11.9	76.0	14.9	88.3	18.4	94.4	20.2	101	22.1	113	26.3	116	26.7
	29	63.7	12.6	76.0	15.9	88.3	19.6	94.4	21.6	101	23.7	112	27.5	114	27.7
	31	63.7	13.4	76.0	17.0	88.3	20.9	94.4	23.0	101	25.2	110	28.6	112	28.8
	33	63.7	14.3	76.0	18.0	88.3	22.3	94.4	24.5	101	26.9	108	29.7	110	29.9
	35	63.7	15.2	76.0	19.2	88.3	23.7	94.4	26.1	101	28.7	106	30.8	109	31.0
	37	63.7	16.1	76.0	20.4	88.3	25.2	94.4	27.8	101	30.6	105	31.8	107	32.1
	39	63.7	17.1	76.0	21.7	88.3	26.8	94.4	29.6	101	32.6	103	32.9	105	33.2
80 (760)	10	56.6	8.38	67.5	10.0	78.5	11.8	83.9	12.7	89.4	13.6	100	15.5	111	17.5
	12	56.6	8.51	67.5	10.2	78.5	12.0	83.9	12.9	89.4	13.9	100	15.8	111	17.8
	14	56.6	8.65	67.5	10.4	78.5	12.2	83.9	13.2	89.4	14.1	100	16.1	111	18.2
	16	56.6	8.80	67.5	10.6	78.5	12.4	83.9	13.4	89.4	14.4	100	16.4	111	18.5
	18	56.6	8.95	67.5	10.8	78.5	12.7	83.9	13.7	89.4	14.7	100	16.8	111	18.9
	20	56.6	9.11	67.5	11.0	78.5	12.9	83.9	13.9	89.4	15.0	100	17.4	111	20.2
	21	56.6	9.19	67.5	11.1	78.5	13.1	83.9	14.1	89.4	15.3	100	18.0	111	20.9
	23	56.6	9.4	67.5	11.3	78.5	13.7	83.9	15.0	89.4	16.4	100	19.3	111	22.5
	25	56.6	9.7	67.5	12.0	78.5	14.6	83.9	16.0	89.4	17.5	100	20.6	111	24.1
	27	56.6	10.3	67.5	12.8	78.5	15.6	83.9	17.1	89.4	18.7	100	22.1	111	25.7
	29	56.6	10.9	67.5	13.6	78.5	16.6	83.9	18.2	89.4	19.9	100	23.6	111	27.5
	31	56.6	11.6	67.5	14.5	78.5	17.7	83.9	19.4	89.4	21.3	100	25.2	109	28.6
	33	56.6	12.3	67.5	15.4	78.5	18.8	83.9	20.7	89.4	22.7	100	26.8	108	29.6
	35	56.6	13.1	67.5	16.4	78.5	20.1	83.9	22.0	89.4	24.1	100	28.6	106	30.7
	37	56.6	13.8	67.5	17.4	78.5	21.3	83.9	23.5	89.4	25.7	100	30.5	104	31.8
	39	56.6	14.7	67.5	18.4	78.5	22.7	83.9	24.9	89.4	27.3	100	32.5	103	32.9
70 (665)	10	49.6	7.37	59.1	8.74	68.7	10.2	73.4	11.0	78.2	11.7	87.8	13.4	97.3	15.0
	12	49.6	7.48	59.1	8.89	68.7	10.4	73.4	11.2	78.2	12.0	87.8	13.6	97.3	15.3
	14	49.6	7.60	59.1	9.04	68.7	10.6	73.4	11.4	78.2	12.2	87.8	13.9	97.3	15.6
	16	49.6	7.72	59.1	9.19	68.7	10.8	73.4	11.6	78.2	12.4	87.8	14.1	97.3	15.9
	18	49.6	7.84	59.1	9.4	68.7	11.0	73.4	11.8	78.2	12.6	87.8	14.4	97.3	16.2
	20	49.6	7.98	59.1	9.5	68.7	11.2	73.4	12.0	78.2	12.9	87.8	14.7	97.3	16.6
	21	49.6	8.04	59.1	9.6	68.7	11.3	73.4	12.1	78.2	13.0	87.8	14.9	97.3	17.2
	23	49.6	8.18	59.1	9.8	68.7	11.5	73.4	12.5	78.2	13.6	87.8	16.0	97.3	18.5
	25	49.6	8.33	59.1	10.2	68.7	12.3	73.4	13.4	78.2	14.6	87.8	17.1	97.3	19.8
	27	49.6	8.81	59.1	10.8	68.7	13.1	73.4	14.3	78.2	15.5	87.8	18.2	97.3	21.1
	29	49.6	9.3	59.1	11.5	68.7	13.9	73.4	15.2	78.2	16.6	87.8	19.4	97.3	22.5
	31	49.6	9.9	59.1	12.2	68.7	14.8	73.4	16.2	78.2	17.6	87.8	20.7	97.3	24.1
	33	49.6	10.5	59.1	13.0	68.7	15.7	73.4	17.2	78.2	18.8	87.8	22.1	97.3	25.6
	35	49.6	11.1	59.1	13.8	68.7	16.7	73.4	18.3	78.2	20.0	87.8	23.5	97.3	27.3
	37	49.6	11.8	59.1	14.6	68.7	17.8	73.4	19.4	78.2	21.2	87.8	25.0	97.3	29.1
	39	49.6	12.5	59.1	15.5	68.7	18.9	73.4	20.7	78.2	22.6	87.8	26.6	97.3	31.0
60 (570)	10	42.5	6.41	50.7	7.52	58.8	8.70	62.9	9.3	67.0	10.0	75.2	11.3	83.4	12.6
	12	42.5	6.50	50.7	7.64	58.8	8.85	62.9	9.5	67.0	10.1	75.2	11.5	83.4	12.8
	14	42.5	6.59	50.7	7.76	58.8	9.00	62.9	9.6	67.0	10.3	75.2	11.7	83.4	13.1
	16	42.5	6.69	50.7	7.88	58.8	9.15	62.9	9.8	67.0	10.5	75.2	11.9	83.4	13.3
	18	42.5	6.80	50.7	8.01	58.8	9.3	62.9	10.0	67.0	10.7	75.2	12.1	83.4	13.6
	20	42.5	6.90	50.7	8.15	58.8	9.5	62.9	10.2	67.0	10.9	75.2	12.3	83.4	13.9
	21	42.5	6.96	50.7	8.22	58.8	9.6	62.9	10.3	67.0	11.0	75.2	12.5	83.4	14.0
	23	42.5	7.07	50.7	8.36	58.8	9.7	62.9	10.5	67.0	11.2	75.2	12.9	83.4	14.9
	25	42.5	7.19	50.7	8.52	58.8	10.1	62.9	11.0	67.0	11.9	75.2	13.8	83.4	15.9
	27	42.5	7.45	50.7	9.03	58.8	10.8	62.9	11.7	67.0	12.7	75.2	14.7	83.4	17.0
	29	42.5	7.89	50.7	9.6	58.8	11.4	62.9	12.4	67.0	13.5	75.2	15.7	83.4	18.1
	31	42.5	8.36	50.7	10.2	58.8	12.2	62.9	13.2	67.0	14.3	75.2	16.7	83.4	19.3
	33	42.5	8.84	50.7	10.8	58.8	12.9	62.9	14.1	67.0	15.2	75.2	17.8	83.4	20.5
	35	42.5	9.3	50.7	11.4	58.8	13.7	62.9	14.9	67.0	16.2	75.2	18.9	83.4	21.8
	37	42.5	9.9	50.7	12.1	58.8	14.5	62.9	15.8	67.0	17.2	75.2	20.1	83.4	23.2
	39	42.5	10.4	50.7	12.8	58.8	15.4	62.9	16.8	67.0	18.3	75.2	21.4	83.4	24.7
50 (475)	10	35.4	5.51	42.2	6.37	49.0	7.29	52.5	7.77	55.9	8.26	62.7	9.3	69.5	10.3
	12	35.4	5.58	42.2	6.46	49.0	7.41	52.5	7.90	55.9	8.40	62.7	9.4	69.5	10.5
	14	35.4	5.65	42.2	6.56	49.0	7.52	52.5	8.02	55.9	8.54	62.7	9.6	69.5	10.7
	16	35.4	5.73	42.2	6.66	49.0	7.64	52.5	8.15	55.9	8.68	62.7	9.8	69.5	10.9
	18	35.4	5.81	42.2	6.76	49.0	7.77	52.5	8.29	55.9	8.83	62.7	9.9	69.5	11.1
	20	35.4	5.89	42.2	6.86	49.0	7.90	52.5	8.43	55.9	8.98	62.7	10.1	69.5	11.3
	21	35.4	5.94	42.2	6.92	49.0	7.96	52.5	8.51	55.9	9.06	62.7	10.2	69.5	11.4
	23	35.4	6.02	42.2	7.03	49.0	8.10	52.5	8.66	55.9	9.2	62.7	10.4	69.5	11.7
	25	35.4	6.12	42.2	7.15	49.0	8.25	52.5	8.84	55.9	9.5	62.7	10.9	69.5	12.5
	27	35.4	6.21	42.2	7.40	49.0	8.70	52.5	9.4	55.9	10.1	62.7	11.6	69.5	13.3
	29	35.4	6.57	42.2	7.84	49.0	9.2	52.5	10.0	55.9	10.7	62.7	12.4	69.5	14.1
	31	35.4	6.95	42.2	8.30	49.0	9.8	52.5	10.6	55.9	11.4	62.7	13.2	69.5	15.0
	33	35.4	7.33	42.2	8.78	49.0	10.4	52.5	11.2	55.9	12.1	62.7	14.0	69.5	16.0
	35	35.4	7.74	42.2	9.3	49.0	11.0	52.5	11.9	55.9	12.8	62.7	14.8	69.5	17.0
	37	35.4	8.16	42.2	9.8	49.0	11.6	52.5	12.6	55.9	13.6	62.7	15.7	69.5	18.0
	39	35.4	8.61	42.2	10.4	49.0	12.3	52.5	13.3	55.9	14.4	62.7	16.7	69.5	19.2

TC Total capacity ; kW
PI Power Input ; kW(Comp.+Outdoor fan motor)
Note1: The above table shows the average value of conditions which may occur.

RXQ40PY1 [50Hz]

Cooling capacity

Combination(%) (Capacity index)	Outdoor air temp. °CDB	Indoor air temp. 14.0°CWB TC kW	14.0°CWB PI kW	16.0°CWB TC kW	16.0°CWB PI kW	18.0°CWB TC kW	18.0°CWB PI kW	19.0°CWB TC kW	19.0°CWB PI kW	20.0°CWB TC kW	20.0°CWB PI kW	22.0°CWB TC kW	22.0°CWB PI kW	24.0°CWB TC kW	24.0°CWB PI kW
130 (1300)	10	98.6	15.5	118	18.9	137	22.5	142	23.0	143	22.5	147	21.6	150	20.6
	12	98.6	15.8	118	19.3	137	23.0	140	22.9	142	22.4	145	21.4	149	21.1
	14	98.6	16.1	118	19.7	136	23.2	138	22.8	140	22.3	143	22.1	147	22.3
	16	98.6	16.4	118	20.0	134	23.1	136	23.0	138	23.1	141	23.3	145	23.5
	18	98.6	16.7	118	20.4	132	24.0	134	24.1	136	24.3	140	24.5	143	24.7
	20	98.6	17.0	118	21.8	131	25.2	132	25.3	134	25.4	138	25.7	141	25.9
	21	98.6	17.5	118	22.6	130	25.8	132	25.9	133	26.0	137	26.3	140	26.5
	23	98.6	18.7	118	24.2	128	26.9	130	27.1	131	27.2	135	27.5	139	27.8
	25	98.6	20.0	118	25.9	126	28.1	128	28.3	130	28.4	133	28.7	137	29.0
	27	98.6	21.4	118	27.7	124	29.3	126	29.5	128	29.6	131	29.9	135	30.2
	29	98.6	22.8	118	29.6	122	30.5	124	30.7	126	30.8	130	31.2	133	31.5
	31	98.6	24.4	117	31.3	121	31.7	122	31.9	124	32.0	128	32.4	131	32.7
	33	98.6	26.0	115	32.5	119	32.9	121	33.1	122	33.3	126	33.6	129	34.0
	35	98.6	27.7	113	33.7	117	34.1	119	34.3	120	34.5	124	34.9	128	35.3
	37	98.6	29.4	112	34.9	115	35.3	117	35.5	119	35.7	122	36.1	126	36.5
	39	98.6	31.3	110	36.1	113	36.5	115	36.7	117	36.9	120	37.4	124	37.8
120 (1200)	10	91.0	14.1	109	17.3	126	20.5	135	22.2	141	23.1	144	22.3	148	21.4
	12	91.0	14.4	109	17.6	126	20.9	135	22.6	139	23.0	143	22.1	146	21.2
	14	91.0	14.7	109	17.9	126	21.3	135	23.0	137	22.9	141	22.0	144	22.1
	16	91.0	14.9	109	18.3	126	21.7	134	23.2	136	22.9	139	23.1	142	23.3
	18	91.0	15.2	109	18.6	126	22.5	132	24.0	134	24.1	137	24.3	140	24.5
	20	91.0	15.5	109	19.4	126	24.2	130	25.2	132	25.3	135	25.5	139	25.7
	21	91.0	15.7	109	20.1	126	25.0	129	25.7	131	25.9	134	26.1	138	26.3
	23	91.0	16.7	109	21.5	126	26.8	128	26.9	129	27.0	133	27.3	136	27.6
	25	91.0	17.9	109	23.0	124	28.0	126	28.1	127	28.2	131	28.5	134	28.8
	27	91.0	19.1	109	24.6	122	29.1	124	29.3	126	29.4	129	29.7	132	30.0
	29	91.0	20.4	109	26.3	120	30.3	122	30.5	124	30.6	127	30.9	130	31.2
	31	91.0	21.7	109	28.0	119	31.5	120	31.7	122	31.8	125	32.1	128	32.5
	33	91.0	23.1	109	29.9	117	32.7	118	32.9	120	33.0	123	33.4	127	33.7
	35	91.0	24.6	109	31.9	115	33.9	117	34.1	118	34.2	122	34.6	125	34.9
	37	91.0	26.2	109	34.0	113	35.1	115	35.3	116	35.5	120	35.8	123	36.2
	39	91.0	27.9	108	35.9	111	36.3	113	36.5	115	36.7	118	37.1	121	37.5
110 (1100)	10	83.4	12.8	100	15.6	116	18.6	124	20.1	132	21.6	142	22.9	145	22.1
	12	83.4	13.1	100	15.9	116	18.9	124	20.4	132	22.0	140	22.8	143	22.0
	14	83.4	13.3	100	16.2	116	19.3	124	20.8	132	22.4	138	22.7	141	22.0
	16	83.4	13.6	100	16.5	116	19.7	124	21.2	132	22.9	136	23.0	139	23.2
	18	83.4	13.8	100	16.9	116	20.0	124	21.8	132	24.0	135	24.2	138	24.4
	20	83.4	14.1	100	17.2	116	21.2	124	23.5	130	25.1	133	25.3	136	25.5
	21	83.4	14.2	100	17.7	116	22.0	124	24.3	129	25.7	132	25.9	135	26.1
	23	83.4	14.9	100	19.0	116	23.6	124	26.1	127	26.9	130	27.1	133	27.3
	25	83.4	15.9	100	20.3	116	25.2	124	27.9	125	28.0	128	28.3	131	28.5
	27	83.4	17.0	100	21.7	116	27.0	122	29.1	123	29.2	126	29.5	129	29.8
	29	83.4	18.1	100	23.1	116	28.8	120	30.3	121	30.4	125	30.7	128	31.0
	31	83.4	19.2	100	24.7	116	30.8	118	31.5	120	31.6	123	31.9	126	32.2
	33	83.4	20.5	100	26.3	115	32.5	116	32.6	118	32.8	121	33.1	124	33.4
	35	83.4	21.8	100	28.0	113	33.7	115	33.8	116	34.0	119	34.3	122	34.6
	37	83.4	23.2	100	29.8	111	34.9	113	35.0	114	35.2	117	35.5	120	35.9
	39	83.4	24.6	100	31.8	109	36.0	111	36.2	112	36.4	115	36.8	118	37.1
100 (1000)	10	75.9	11.6	90.5	14.0	105	16.6	112	18.0	120	19.3	134	22.1	142	22.9
	12	75.9	11.8	90.5	14.3	105	16.9	112	18.3	120	19.7	134	22.5	140	22.7
	14	75.9	12.0	90.5	14.6	105	17.3	112	18.7	120	20.1	134	22.9	138	22.6
	16	75.9	12.2	90.5	14.8	105	17.6	112	19.0	120	20.5	134	23.2	137	23.0
	18	75.9	12.4	90.5	15.1	105	17.9	112	19.4	120	20.9	132	24.0	135	24.2
	20	75.9	12.7	90.5	15.4	105	18.5	112	20.4	120	22.4	130	25.2	133	25.3
	21	75.9	12.8	90.5	15.6	105	19.1	112	21.1	120	23.2	129	25.7	132	25.9
	23	75.9	13.1	90.5	16.6	105	20.5	112	22.6	120	24.8	127	26.9	130	27.1
	25	75.9	14.0	90.5	17.7	105	21.9	112	24.2	120	26.6	126	28.1	128	28.3
	27	75.9	14.9	90.5	18.9	105	23.5	112	25.9	120	28.5	124	29.3	127	29.5
	29	75.9	15.9	90.5	20.2	105	25.0	112	27.7	119	30.2	122	30.5	125	30.7
	31	75.9	16.9	90.5	21.5	105	26.7	112	29.5	117	31.4	120	31.6	123	31.9
	33	75.9	18.0	90.5	22.9	105	28.5	112	31.5	116	32.6	118	32.8	121	33.1
	35	75.9	19.1	90.5	24.4	105	30.4	112	33.6	114	33.7	117	34.0	119	34.3
	37	75.9	20.3	90.5	26.0	105	32.4	111	34.8	112	34.9	115	35.3	117	35.6
	39	75.9	21.6	90.5	27.6	105	34.5	109	36.0	110	36.1	113	36.5	116	36.8

Cooling capacity

Combination(%) (Capacity index)	Outdoor air temp. °CDB	Indoor air temp. 14.0°CWB TC kW	14.0°CWB PI kW	16.0°CWB TC kW	16.0°CWB PI kW	18.0°CWB TC kW	18.0°CWB PI kW	19.0°CWB TC kW	19.0°CWB PI kW	20.0°CWB TC kW	20.0°CWB PI kW	22.0°CWB TC kW	22.0°CWB PI kW	24.0°CWB TC kW	24.0°CWB PI kW
90 (900)	10	68.3	10.4	81.4	12.5	94.6	14.8	101	15.9	108	17.1	121	19.6	134	22.0
	12	68.3	10.5	81.4	12.7	94.6	15.0	101	16.2	108	17.4	121	19.9	134	22.5
	14	68.3	10.7	81.4	13.0	94.6	15.3	101	16.5	108	17.8	121	20.3	134	22.9
	16	68.3	10.9	81.4	13.2	94.6	15.6	101	16.8	108	18.1	121	20.7	134	23.3
	18	68.3	11.1	81.4	13.4	94.6	15.9	101	17.2	108	18.5	121	21.1	132	24.0
	20	68.3	11.3	81.4	13.7	94.6	16.2	101	17.5	108	19.2	121	22.7	130	25.2
	21	68.3	11.4	81.4	13.8	94.6	16.5	101	18.1	108	19.8	121	23.5	129	25.7
	23	68.3	11.6	81.4	14.4	94.6	17.7	101	19.4	108	21.3	121	25.2	127	26.9
	25	68.3	12.3	81.4	15.4	94.6	18.9	101	20.8	108	22.8	121	27.0	126	28.1
	27	68.3	13.0	81.4	16.4	94.6	20.2	101	22.2	108	24.3	121	28.9	124	29.3
	29	68.3	13.9	81.4	17.5	94.6	21.5	101	23.7	108	26.0	119	30.2	122	30.5
	31	68.3	14.8	81.4	18.6	94.6	22.9	101	25.3	108	27.7	118	31.4	120	31.6
	33	68.3	15.7	81.4	19.8	94.6	24.4	101	26.9	108	29.6	116	32.6	118	32.8
	35	68.3	16.6	81.4	21.1	94.6	26.0	101	28.7	108	31.5	114	33.8	116	34.0
	37	68.3	17.7	81.4	22.4	94.6	27.7	101	30.6	108	33.6	112	35.0	115	35.2
	39	68.3	18.7	81.4	23.8	94.6	29.5	101	32.6	108	35.8	110	36.2	113	36.5
80 (800)	10	60.7	9.2	72.4	11.0	84.1	12.9	89.9	13.9	95.8	15.0	107	17.1	119	19.2
	12	60.7	9.3	72.4	11.2	84.1	13.2	89.9	14.2	95.8	15.2	107	17.4	119	19.6
	14	60.7	9.5	72.4	11.4	84.1	13.4	89.9	14.5	95.8	15.5	107	17.7	119	20.0
	16	60.7	9.7	72.4	11.6	84.1	13.7	89.9	14.7	95.8	15.8	107	18.1	119	20.4
	18	60.7	9.8	72.4	11.8	84.1	13.9	89.9	15.0	95.8	16.1	107	18.4	119	20.8
	20	60.7	10.0	72.4	12.0	84.1	14.2	89.9	15.3	95.8	16.5	107	19.1	119	22.2
	21	60.7	10.1	72.4	12.2	84.1	14.3	89.9	15.5	95.8	16.8	107	19.8	119	23.0
	23	60.7	10.3	72.4	12.4	84.1	15.0	89.9	16.5	95.8	18.0	107	21.2	119	24.7
	25	60.7	10.6	72.4	13.2	84.1	16.1	89.9	17.6	95.8	19.2	107	22.7	119	26.4
	27	60.7	11.3	72.4	14.1	84.1	17.1	89.9	18.8	95.8	20.5	107	24.2	119	28.3
	29	60.7	12.0	72.4	15.0	84.1	18.3	89.9	20.0	95.8	21.9	107	25.9	119	30.2
	31	60.7	12.7	72.4	15.9	84.1	19.4	89.9	21.3	95.8	23.3	107	27.6	117	31.4
	33	60.7	13.5	72.4	16.9	84.1	20.7	89.9	22.7	95.8	24.9	107	29.5	115	32.6
	35	60.7	14.3	72.4	18.0	84.1	22.0	89.9	24.2	95.8	26.5	107	31.4	114	33.7
	37	60.7	15.2	72.4	19.1	84.1	23.4	89.9	25.8	95.8	28.2	107	33.5	112	34.9
	39	60.7	16.1	72.4	20.3	84.1	24.9	89.9	27.4	95.8	30.0	107	35.6	110	36.1
70 (700)	10	53.1	8.09	63.3	9.6	73.6	11.2	78.7	12.0	83.8	12.9	94.0	14.7	104	16.5
	12	53.1	8.21	63.3	9.8	73.6	11.4	78.7	12.3	83.8	13.1	94.0	14.9	104	16.8
	14	53.1	8.34	63.3	9.9	73.6	11.6	78.7	12.5	83.8	13.4	94.0	15.2	104	17.1
	16	53.1	8.47	63.3	10.1	73.6	11.8	78.7	12.7	83.8	13.6	94.0	15.5	104	17.4
	18	53.1	8.61	63.3	10.3	73.6	12.0	78.7	12.9	83.8	13.9	94.0	15.8	104	17.8
	20	53.1	8.76	63.3	10.5	73.6	12.3	78.7	13.2	83.8	14.1	94.0	16.1	104	18.3
	21	53.1	8.83	63.3	10.5	73.6	12.4	78.7	13.3	83.8	14.3	94.0	16.4	104	18.9
	23	53.1	9.0	63.3	10.7	73.6	12.6	78.7	13.8	83.8	15.0	94.0	17.5	104	20.3
	25	53.1	9.1	63.3	11.2	73.6	13.5	78.7	14.7	83.8	16.0	94.0	18.7	104	21.7
	27	53.1	9.7	63.3	11.9	73.6	14.3	78.7	15.7	83.8	17.1	94.0	20.0	104	23.2
	29	53.1	10.3	63.3	12.6	73.6	15.3	78.7	16.7	83.8	18.2	94.0	21.3	104	24.8
	31	53.1	10.9	63.3	13.4	73.6	16.3	78.7	17.8	83.8	19.4	94.0	22.7	104	26.4
	33	53.1	11.5	63.3	14.3	73.6	17.3	78.7	18.9	83.8	20.6	94.0	24.2	104	28.2
	35	53.1	12.2	63.3	15.1	73.6	18.4	78.7	20.1	83.8	21.9	94.0	25.8	104	30.0
	37	53.1	12.9	63.3	16.0	73.6	19.5	78.7	21.4	83.8	23.3	94.0	27.5	104	32.0
	39	53.1	13.7	63.3	17.0	73.6	20.7	78.7	22.7	83.8	24.8	94.0	29.2	104	34.1
60 (600)	10	45.5	7.04	54.3	8.26	63.1	9.6	67.4	10.2	71.8	10.9	80.6	12.4	89.4	13.8
	12	45.5	7.14	54.3	8.39	63.1	9.7	67.4	10.4	71.8	11.1	80.6	12.6	89.4	14.1
	14	45.5	7.24	54.3	8.52	63.1	9.9	67.4	10.6	71.8	11.3	80.6	12.8	89.4	14.4
	16	45.5	7.35	54.3	8.66	63.1	10.0	67.4	10.8	71.8	11.5	80.6	13.0	89.4	14.6
	18	45.5	7.46	54.3	8.80	63.1	10.2	67.4	11.0	71.8	11.7	80.6	13.3	89.4	14.9
	20	45.5	7.58	54.3	8.95	63.1	10.4	67.4	11.2	71.8	11.9	80.6	13.5	89.4	15.2
	21	45.5	7.64	54.3	9.0	63.1	10.5	67.4	11.3	71.8	12.1	80.6	13.7	89.4	15.4
	23	45.5	7.76	54.3	9.2	63.1	10.7	67.4	11.5	71.8	12.3	80.6	14.2	89.4	16.3
	25	45.5	7.89	54.3	9.4	63.1	11.1	67.4	12.1	71.8	13.1	80.6	15.2	89.4	17.4
	27	45.5	8.18	54.3	9.9	63.1	11.8	67.4	12.8	71.8	13.9	80.6	16.2	89.4	18.6
	29	45.5	8.67	54.3	10.5	63.1	12.6	67.4	13.7	71.8	14.8	80.6	17.2	89.4	19.9
	31	45.5	9.2	54.3	11.2	63.1	13.4	67.4	14.5	71.8	15.8	80.6	18.4	89.4	21.2
	33	45.5	9.7	54.3	11.8	63.1	14.2	67.4	15.4	71.8	16.7	80.6	19.5	89.4	22.5
	35	45.5	10.3	54.3	12.5	63.1	15.0	67.4	16.4	71.8	17.8	80.6	20.8	89.4	24.0
	37	45.5	10.8	54.3	13.3	63.1	15.9	67.4	17.4	71.8	18.9	80.6	22.1	89.4	25.5
	39	45.5	11.5	54.3	14.0	63.1	16.9	67.4	18.4	71.8	20.0	80.6	23.5	89.4	27.2
50 (500)	10	37.9	6.05	45.2	7.00	52.5	8.01	56.2	8.54	59.9	9.1	67.2	10.2	74.5	11.4
	12	37.9	6.13	45.2	7.10	52.5	8.13	56.2	8.67	59.9	9.2	67.2	10.4	74.5	11.5
	14	37.9	6.21	45.2	7.20	52.5	8.26	56.2	8.81	59.9	9.4	67.2	10.5	74.5	11.8
	16	37.9	6.29	45.2	7.31	52.5	8.39	56.2	8.95	59.9	9.5	67.2	10.7	74.5	12.0
	18	37.9	6.38	45.2	7.42	52.5	8.53	56.2	9.1	59.9	9.7	67.2	10.9	74.5	12.2
	20	37.9	6.47	45.2	7.54	52.5	8.67	56.2	9.3	59.9	9.9	67.2	11.1	74.5	12.4
	21	37.9	6.52	45.2	7.60	52.5	8.74	56.2	9.3	59.9	10.0	67.2	11.2	74.5	12.5
	23	37.9	6.61	45.2	7.72	52.5	8.90	56.2	9.5	59.9	10.1	67.2	11.4	74.5	12.8
	25	37.9	6.72	45.2	7.85	52.5	9.1	56.2	9.7	59.9	10.4	67.2	12.0	74.5	13.7
	27	37.9	6.82	45.2	8.13	52.5	9.6	56.2	10.3	59.9	11.1	67.2	12.8	74.5	14.6
	29	37.9	7.22	45.2	8.61	52.5	10.1	56.2	11.0	59.9	11.8	67.2	13.6	74.5	15.5
	31	37.9	7.63	45.2	9.1	52.5	10.8	56.2	11.6	59.9	12.5	67.2	14.5	74.5	16.5
	33	37.9	8.05	45.2	9.6	52.5	11.4	56.2	12.3	59.9	13.3	67.2	15.3	74.5	17.6
	35	37.9	8.50	45.2	10.2	52.5	12.1	56.2	13.1	59.9	14.1	67.2	16.3	74.5	18.7
	37	37.9	8.96	45.2	10.8	52.5	12.8	56.2	13.8	59.9	14.9	67.2	17.3	74.5	19.8
	39	37.9	9.5	45.2	11.4	52.5	13.5	56.2	14.6	59.9	15.8	67.2	18.3	74.5	21.0

TC Total capacity ; kW
PI Power Input ; kW(Comp.+Outdoor fan motor)
Note1: The above table shows the average value of conditions which may occur.

RXQ42PY1 [50Hz]

Cooling capacity

Combination(%) (Capacity index)	Outdoor air temp. °CDB	Indoor air temp. 14.0°CWB TC kW	14.0°CWB PI kW	16.0°CWB TC kW	16.0°CWB PI kW	18.0°CWB TC kW	18.0°CWB PI kW	19.0°CWB TC kW	19.0°CWB PI kW	20.0°CWB TC kW	20.0°CWB PI kW	22.0°CWB TC kW	22.0°CWB PI kW	24.0°CWB TC kW	24.0°CWB PI kW
130 (1365)	10	102	16.5	122	20.2	141	24.0	147	24.5	148	24.0	152	23.0	156	22.0
	12	102	16.8	122	20.6	141	24.5	145	24.4	147	23.9	150	22.8	154	22.5
	14	102	17.1	122	21.0	141	24.8	143	24.3	145	23.7	148	23.5	152	23.8
	16	102	17.4	122	21.4	139	24.6	141	24.5	143	24.6	146	24.8	150	25.1
	18	102	17.8	122	21.8	137	25.6	139	25.7	141	25.8	145	26.1	148	26.3
	20	102	18.1	122	23.2	135	26.8	137	27.0	139	27.1	143	27.4	146	27.6
	21	102	18.6	122	24.0	134	27.5	136	27.6	138	27.7	142	28.0	145	28.3
	23	102	20.0	122	25.8	132	28.7	134	28.9	136	29.0	140	29.3	144	29.6
	25	102	21.3	122	27.6	131	30.0	132	30.1	134	30.3	138	30.6	142	30.9
	27	102	22.8	122	29.5	129	31.2	131	31.4	132	31.6	136	31.9	140	32.2
	29	102	24.3	122	31.5	127	32.5	129	32.7	130	32.8	134	33.2	138	33.5
	31	102	25.9	121	33.4	125	33.8	127	33.9	129	34.1	132	34.5	136	34.9
	33	102	27.7	119	34.7	123	35.0	125	35.2	127	35.4	130	35.8	134	36.2
	35	102	29.5	117	35.9	121	36.3	123	36.5	125	36.7	128	37.1	132	37.6
	37	102	31.4	116	37.2	119	37.6	121	37.8	123	38.0	127	38.5	130	38.9
	39	102	33.4	114	38.5	117	38.9	119	39.1	121	39.4	125	39.8	128	40.3
120 (1260)	10	94.3	15.1	112	18.4	131	21.9	140	23.6	146	24.6	150	23.7	153	22.8
	12	94.3	15.3	112	18.7	131	22.3	140	24.1	144	24.5	148	23.6	151	22.6
	14	94.3	15.6	112	19.1	131	22.7	140	24.6	142	24.4	146	23.4	149	23.6
	16	94.3	15.9	112	19.5	131	23.2	139	24.7	140	24.4	144	24.6	147	24.9
	18	94.3	16.2	112	19.9	131	24.0	137	25.6	139	25.7	142	25.9	145	26.1
	20	94.3	16.5	112	20.6	131	25.7	135	26.8	137	26.9	140	27.2	143	27.4
	21	94.3	16.7	112	21.4	131	26.7	134	27.4	136	27.6	139	27.8	143	28.1
	23	94.3	17.8	112	22.9	130	28.5	132	28.7	134	28.8	137	29.1	141	29.4
	25	94.3	19.1	112	24.5	129	29.8	130	29.9	132	30.1	135	30.4	139	30.7
	27	94.3	20.4	112	26.2	127	31.0	128	31.2	130	31.3	133	31.7	137	32.0
	29	94.3	21.7	112	28.0	125	32.3	126	32.5	128	32.6	132	32.9	135	33.3
	31	94.3	23.1	112	29.9	123	33.6	125	33.7	126	33.9	130	34.2	133	34.6
	33	94.3	24.7	112	31.9	121	34.8	123	35.0	124	35.2	128	35.5	131	35.9
	35	94.3	26.2	112	34.0	119	36.1	121	36.3	122	36.5	126	36.9	129	37.2
	37	94.3	27.9	112	36.2	117	37.4	119	37.6	121	37.8	124	38.2	127	38.6
	39	94.3	29.7	112	38.2	115	38.7	117	38.9	119	39.1	122	39.5	125	39.9
110 (1155)	10	86.4	13.7	103	16.7	120	19.8	128	21.4	136	23.0	147	24.4	150	23.6
	12	86.4	13.9	103	17.0	120	20.2	128	21.8	136	23.4	145	24.3	148	23.4
	14	86.4	14.2	103	17.3	120	20.5	128	22.2	136	23.9	143	24.2	146	23.4
	16	86.4	14.4	103	17.6	120	20.9	128	22.6	136	24.3	141	24.5	144	24.7
	18	86.4	14.7	103	18.0	120	21.4	128	23.3	136	25.5	139	25.7	142	25.9
	20	86.4	15.0	103	18.3	120	22.6	128	25.0	134	26.8	137	27.0	141	27.2
	21	86.4	15.1	103	18.9	120	23.4	128	25.9	133	27.4	137	27.6	140	27.9
	23	86.4	15.9	103	20.2	120	25.1	128	27.8	131	28.6	135	28.9	138	29.1
	25	86.4	16.9	103	21.6	120	26.9	128	29.8	130	29.9	133	30.1	136	30.4
	27	86.4	18.1	103	23.1	120	28.8	126	31.0	128	31.1	131	31.4	134	31.7
	29	86.4	19.3	103	24.7	120	30.7	124	32.3	126	32.4	129	32.7	132	33.0
	31	86.4	20.5	103	26.3	120	32.8	122	33.5	124	33.7	127	34.0	130	34.3
	33	86.4	21.8	103	28.0	119	34.6	120	34.8	122	34.9	125	35.3	128	35.6
	35	86.4	23.2	103	29.9	117	35.9	119	36.0	120	36.2	123	36.6	126	36.9
	37	86.4	24.7	103	31.8	115	37.1	117	37.3	118	37.5	121	37.9	124	38.2
	39	86.4	26.2	103	33.9	113	38.4	115	38.6	116	38.8	119	39.2	123	39.6
100 (1050)	10	78.6	12.3	93.7	15.0	109	17.7	116	19.1	124	20.6	139	23.5	147	24.4
	12	78.6	12.6	93.7	15.2	109	18.1	116	19.5	124	21.0	139	24.0	145	24.2
	14	78.6	12.8	93.7	15.5	109	18.4	116	19.9	124	21.4	139	24.4	143	24.1
	16	78.6	13.0	93.7	15.8	109	18.8	116	20.3	124	21.8	139	24.8	141	24.5
	18	78.6	13.2	93.7	16.1	109	19.1	116	20.7	124	22.2	137	25.6	140	25.8
	20	78.6	13.5	93.7	16.4	109	19.7	116	21.7	124	23.8	135	26.8	138	27.0
	21	78.6	13.6	93.7	16.6	109	20.4	116	22.5	124	24.7	134	27.4	137	27.6
	23	78.6	14.0	93.7	17.7	109	21.9	116	24.1	124	26.5	132	28.7	135	28.9
	25	78.6	14.9	93.7	18.9	109	23.4	116	25.8	124	28.3	130	29.9	133	30.2
	27	78.6	15.9	93.7	20.2	109	25.0	116	27.6	124	30.3	128	31.2	131	31.4
	29	78.6	16.9	93.7	21.5	109	26.7	116	29.5	123	32.2	126	32.5	129	32.7
	31	78.6	18.0	93.7	22.9	109	28.5	116	31.5	122	33.4	124	33.7	127	34.0
	33	78.6	19.2	93.7	24.4	109	30.4	116	33.6	120	34.7	123	35.0	125	35.3
	35	78.6	20.4	93.7	26.0	109	32.4	116	35.8	118	36.0	121	36.3	123	36.6
	37	78.6	21.6	93.7	27.7	109	34.5	115	37.1	116	37.2	119	37.6	122	37.9
	39	78.6	23.0	93.7	29.4	109	36.7	113	38.3	114	38.5	117	38.9	120	39.2

Cooling capacity

Combination(%) (Capacity index)	Outdoor air temp. °CDB	Indoor air temp. 14.0°CWB TC kW	14.0°CWB PI kW	16.0°CWB TC kW	16.0°CWB PI kW	18.0°CWB TC kW	18.0°CWB PI kW	19.0°CWB TC kW	19.0°CWB PI kW	20.0°CWB TC kW	20.0°CWB PI kW	22.0°CWB TC kW	22.0°CWB PI kW	24.0°CWB TC kW	24.0°CWB PI kW
90 (945)	10	70.7	11.0	84.3	13.3	97.9	15.7	105	17.0	112	18.2	125	20.8	139	23.5
	12	70.7	11.2	84.3	13.6	97.9	16.0	105	17.3	112	18.6	125	21.2	139	23.9
	14	70.7	11.4	84.3	13.8	97.9	16.3	105	17.6	112	18.9	125	21.6	139	24.4
	16	70.7	11.6	84.3	14.1	97.9	16.6	105	18.0	112	19.3	125	22.1	139	24.8
	18	70.7	11.8	84.3	14.3	97.9	16.9	105	18.3	112	19.7	125	22.5	137	25.6
	20	70.7	12.1	84.3	14.6	97.9	17.3	105	18.7	112	20.4	125	24.2	135	26.8
	21	70.7	12.2	84.3	14.7	97.9	17.6	105	19.3	112	21.1	125	25.0	134	27.4
	23	70.7	12.4	84.3	15.4	97.9	18.8	105	20.7	112	22.7	125	26.9	132	28.7
	25	70.7	13.1	84.3	16.4	97.9	20.1	105	22.1	112	24.2	125	28.8	130	29.9
	27	70.7	13.9	84.3	17.5	97.9	21.5	105	23.6	112	25.9	125	30.8	128	31.2
	29	70.7	14.8	84.3	18.6	97.9	22.9	105	25.2	112	27.7	124	32.2	126	32.4
	31	70.7	15.7	84.3	19.8	97.9	24.4	105	26.9	112	29.5	122	33.5	124	33.7
	33	70.7	16.7	84.3	21.1	97.9	26.0	105	28.7	112	31.5	120	34.7	122	35.0
	35	70.7	17.7	84.3	22.4	97.9	27.7	105	30.6	112	33.6	118	36.0	121	36.3
	37	70.7	18.8	84.3	23.9	97.9	29.5	105	32.6	112	35.8	116	37.3	119	37.6
	39	70.7	20.0	84.3	25.4	97.9	31.4	105	34.7	112	38.1	114	38.5	117	38.8
80 (840)	10	62.8	9.8	75.0	11.7	87.1	13.8	93.1	14.9	99	15.9	111	18.2	123	20.5
	12	62.8	10.0	75.0	11.9	87.1	14.0	93.1	15.1	99	16.2	111	18.5	123	20.9
	14	62.8	10.1	75.0	12.1	87.1	14.3	93.1	15.4	99	16.5	111	18.9	123	21.3
	16	62.8	10.3	75.0	12.4	87.1	14.6	93.1	15.7	99	16.9	111	19.2	123	21.7
	18	62.8	10.5	75.0	12.6	87.1	14.8	93.1	16.0	99	17.2	111	19.6	123	22.1
	20	62.8	10.7	75.0	12.8	87.1	15.1	93.1	16.3	99	17.5	111	20.3	123	23.7
	21	62.8	10.8	75.0	13.0	87.1	15.3	93.1	16.5	99	17.9	111	21.1	123	24.5
	23	62.8	11.0	75.0	13.2	87.1	16.0	93.1	17.5	99	19.1	111	22.6	123	26.3
	25	62.8	11.3	75.0	14.1	87.1	17.1	93.1	18.8	99	20.5	111	24.1	123	28.1
	27	62.8	12.0	75.0	15.0	87.1	18.3	93.1	20.0	99	21.9	111	25.8	123	30.1
	29	62.8	12.8	75.0	15.9	87.1	19.5	93.1	21.3	99	23.3	111	27.6	123	32.2
	31	62.8	13.6	75.0	17.0	87.1	20.7	93.1	22.7	99	24.9	111	29.4	121	33.4
	33	62.8	14.4	75.0	18.0	87.1	22.1	93.1	24.2	99	26.5	111	31.4	120	34.7
	35	62.8	15.3	75.0	19.1	87.1	23.5	93.1	25.8	99	28.2	111	33.5	118	35.9
	37	62.8	16.2	75.0	20.3	87.1	24.9	93.1	27.4	99	30.1	111	35.7	116	37.2
	39	62.8	17.2	75.0	21.6	87.1	26.5	93.1	29.2	99	32.0	111	38.0	114	38.5
70 (735)	10	55.0	8.62	65.6	10.2	76.2	11.9	81.5	12.8	86.8	13.7	97.4	15.6	108	17.6
	12	55.0	8.75	65.6	10.4	76.2	12.1	81.5	13.1	86.8	14.0	97.4	15.9	108	17.9
	14	55.0	8.89	65.6	10.6	76.2	12.4	81.5	13.3	86.8	14.2	97.4	16.2	108	18.2
	16	55.0	9.0	65.6	10.8	76.2	12.6	81.5	13.5	86.8	14.5	97.4	16.5	108	18.6
	18	55.0	9.2	65.6	10.9	76.2	12.8	81.5	13.8	86.8	14.8	97.4	16.8	108	19.0
	20	55.0	9.3	65.6	11.1	76.2	13.1	81.5	14.1	86.8	15.1	97.4	17.2	108	19.5
	21	55.0	9.4	65.6	11.2	76.2	13.2	81.5	14.2	86.8	15.2	97.4	17.4	108	20.2
	23	55.0	9.6	65.6	11.4	76.2	13.5	81.5	14.7	86.8	15.9	97.4	18.7	108	21.6
	25	55.0	9.7	65.6	11.9	76.2	14.3	81.5	15.7	86.8	17.0	97.4	20.0	108	23.1
	27	55.0	10.3	65.6	12.7	76.2	15.3	81.5	16.7	86.8	18.2	97.4	21.3	108	24.7
	29	55.0	10.9	65.6	13.5	76.2	16.3	81.5	17.8	86.8	19.4	97.4	22.7	108	26.4
	31	55.0	11.6	65.6	14.3	76.2	17.3	81.5	18.9	86.8	20.6	97.4	24.2	108	28.1
	33	55.0	12.3	65.6	15.2	76.2	18.4	81.5	20.1	86.8	22.0	97.4	25.8	108	30.0
	35	55.0	13.0	65.6	16.1	76.2	19.6	81.5	21.4	86.8	23.4	97.4	27.5	108	32.0
	37	55.0	13.8	65.6	17.1	76.2	20.8	81.5	22.8	86.8	24.8	97.4	29.3	108	34.1
	39	55.0	14.6	65.6	18.1	76.2	22.1	81.5	24.2	86.8	26.4	97.4	31.1	108	36.3
60 (630)	10	47.1	7.50	56.2	8.80	65.3	10.2	69.8	10.9	74.4	11.6	83.5	13.2	92.5	14.8
	12	47.1	7.60	56.2	8.94	65.3	10.4	69.8	11.1	74.4	11.8	83.5	13.4	92.5	15.0
	14	47.1	7.71	56.2	9.1	65.3	10.5	69.8	11.3	74.4	12.0	83.5	13.6	92.5	15.3
	16	47.1	7.83	56.2	9.2	65.3	10.7	69.8	11.5	74.4	12.3	83.5	13.9	92.5	15.6
	18	47.1	7.95	56.2	9.4	65.3	10.9	69.8	11.7	74.4	12.5	83.5	14.2	92.5	15.9
	20	47.1	8.07	56.2	9.5	65.3	11.1	69.8	11.9	74.4	12.7	83.5	14.4	92.5	16.2
	21	47.1	8.14	56.2	9.6	65.3	11.2	69.8	12.0	74.4	12.8	83.5	14.6	92.5	16.4
	23	47.1	8.27	56.2	9.8	65.3	11.4	69.8	12.2	74.4	13.1	83.5	15.1	92.5	17.4
	25	47.1	8.41	56.2	10.0	65.3	11.8	69.8	12.9	74.4	13.9	83.5	16.2	92.5	18.6
	27	47.1	8.72	56.2	10.6	65.3	12.6	69.8	13.7	74.4	14.8	83.5	17.2	92.5	19.8
	29	47.1	9.2	56.2	11.2	65.3	13.4	69.8	14.6	74.4	15.8	83.5	18.4	92.5	21.2
	31	47.1	9.8	56.2	11.9	65.3	14.2	69.8	15.5	74.4	16.8	83.5	19.6	92.5	22.6
	33	47.1	10.3	56.2	12.6	65.3	15.1	69.8	16.4	74.4	17.8	83.5	20.8	92.5	24.0
	35	47.1	10.9	56.2	13.4	65.3	16.0	69.8	17.5	74.4	18.9	83.5	22.1	92.5	25.6
	37	47.1	11.6	56.2	14.1	65.3	17.0	69.8	18.5	74.4	20.1	83.5	23.5	92.5	27.2
	39	47.1	12.2	56.2	15.0	65.3	18.0	69.8	19.6	74.4	21.4	83.5	25.0	92.5	28.9
50 (525)	10	39.3	6.44	46.8	7.46	54.4	8.53	58.2	9.1	62.0	9.7	69.6	10.9	77.1	12.1
	12	39.3	6.53	46.8	7.56	54.4	8.66	58.2	9.2	62.0	9.8	69.6	11.0	77.1	12.3
	14	39.3	6.61	46.8	7.67	54.4	8.80	58.2	9.4	62.0	10.0	69.6	11.2	77.1	12.5
	16	39.3	6.70	46.8	7.79	54.4	8.94	58.2	9.5	62.0	10.2	69.6	11.4	77.1	12.8
	18	39.3	6.80	46.8	7.91	54.4	9.1	58.2	9.7	62.0	10.3	69.6	11.6	77.1	13.0
	20	39.3	6.89	46.8	8.03	54.4	9.2	58.2	9.9	62.0	10.5	69.6	11.8	77.1	13.2
	21	39.3	6.94	46.8	8.09	54.4	9.3	58.2	10.0	62.0	10.6	69.6	12.0	77.1	13.4
	23	39.3	7.05	46.8	8.23	54.4	9.5	58.2	10.1	62.0	10.8	69.6	12.2	77.1	13.7
	25	39.3	7.16	46.8	8.36	54.4	9.6	58.2	10.3	62.0	11.1	69.6	12.8	77.1	14.6
	27	39.3	7.27	46.8	8.66	54.4	10.2	58.2	11.0	62.0	11.8	69.6	13.6	77.1	15.5
	29	39.3	7.69	46.8	9.2	54.4	10.8	58.2	11.7	62.0	12.6	69.6	14.5	77.1	16.5
	31	39.3	8.13	46.8	9.7	54.4	11.5	58.2	12.4	62.0	13.4	69.6	15.4	77.1	17.6
	33	39.3	8.58	46.8	10.3	54.4	12.1	58.2	13.1	62.0	14.2	69.6	16.4	77.1	18.7
	35	39.3	9.1	46.8	10.9	54.4	12.9	58.2	13.9	62.0	15.0	69.6	17.4	77.1	19.9
	37	39.3	9.6	46.8	11.5	54.4	13.6	58.2	14.7	62.0	15.9	69.6	18.4	77.1	21.1
	39	39.3	10.1	46.8	12.1	54.4	14.4	58.2	15.6	62.0	16.9	69.6	19.5	77.1	22.4

TC Total capacity ; kW
PI Power Input ; kW(Comp.+Outdoor fan motor)
Note1: The above table shows the average value of conditions which may occur.

RXQ44PY1 [50Hz]

Cooling capacity

Combination(%) (Capacity index)	Outdoor air temp. °CDB	Indoor air temp. 14.0°CWB TC kW	14.0°CWB PI kW	16.0°CWB TC kW	16.0°CWB PI kW	18.0°CWB TC kW	18.0°CWB PI kW	19.0°CWB TC kW	19.0°CWB PI kW	20.0°CWB TC kW	20.0°CWB PI kW	22.0°CWB TC kW	22.0°CWB PI kW	24.0°CWB TC kW	24.0°CWB PI kW
130 (1430)	10	106	17.5	126	21.4	146	25.5	152	26.0	154	25.5	157	24.4	161	23.3
	12	106	17.8	126	21.8	146	26.0	150	25.9	152	25.3	155	24.2	159	23.9
	14	106	18.2	126	22.2	146	26.3	148	25.7	150	25.2	153	25.0	157	25.2
	16	106	18.5	126	22.7	144	26.2	146	26.0	148	26.1	151	26.3	155	26.6
	18	106	18.9	126	23.1	142	27.2	144	27.3	146	27.4	150	27.7	153	28.0
	20	106	19.2	126	24.6	140	28.5	142	28.6	144	28.8	148	29.0	151	29.3
	21	106	19.8	126	25.5	139	29.1	141	29.3	143	29.4	147	29.7	150	30.0
	23	106	21.2	126	27.4	137	30.5	139	30.6	141	30.8	145	31.1	148	31.4
	25	106	22.7	126	29.3	135	31.8	137	32.0	139	32.1	143	32.5	146	32.8
	27	106	24.2	126	31.3	133	33.1	135	33.3	137	33.5	141	33.8	145	34.2
	29	106	25.8	126	33.5	131	34.5	133	34.7	135	34.9	139	35.2	143	35.6
	31	106	27.5	125	35.4	129	35.8	131	36.0	133	36.2	137	36.6	141	37.0
	33	106	29.4	123	36.8	127	37.2	129	37.4	131	37.6	135	38.0	139	38.4
	35	106	31.3	121	38.1	125	38.6	127	38.8	129	39.0	133	39.4	137	39.9
	37	106	33.3	119	39.5	123	39.9	125	40.2	127	40.4	131	40.8	135	41.3
	39	106	35.5	118	40.8	121	41.3	123	41.5	125	41.8	129	42.3	133	42.8
120 (1320)	10	98	16.0	116	19.5	135	23.2	144	25.1	151	26.1	155	25.2	158	24.2
	12	98	16.3	116	19.9	135	23.7	144	25.6	149	26.0	153	25.0	156	24.0
	14	98	16.6	116	20.3	135	24.1	144	26.1	147	25.9	151	24.9	154	25.0
	16	98	16.9	116	20.7	135	24.6	144	26.3	145	25.9	149	26.2	152	26.4
	18	98	17.2	116	21.1	135	25.4	142	27.1	143	27.3	147	27.5	150	27.7
	20	98	17.6	116	21.9	135	27.3	140	28.5	141	28.6	145	28.8	148	29.1
	21	98	17.7	116	22.7	135	28.3	139	29.1	140	29.3	144	29.5	147	29.8
	23	98	18.9	116	24.3	135	30.3	137	30.4	138	30.6	142	30.9	145	31.2
	25	98	20.2	116	26.0	133	31.6	135	31.8	136	31.9	140	32.2	143	32.5
	27	98	21.6	116	27.8	131	33.0	133	33.1	134	33.3	138	33.6	142	33.9
	29	98	23.0	116	29.7	129	34.3	131	34.5	133	34.6	136	35.0	140	35.3
	31	98	24.6	116	31.7	127	35.6	129	35.8	131	36.0	134	36.3	138	36.7
	33	98	26.2	116	33.8	125	37.0	127	37.2	129	37.3	132	37.7	136	38.1
	35	98	27.9	116	36.1	123	38.3	125	38.5	127	38.7	130	39.1	134	39.5
	37	98	29.6	116	38.4	121	39.7	123	39.9	125	40.1	128	40.5	132	40.9
	39	98	31.5	116	40.6	119	41.0	121	41.3	123	41.5	126	41.9	130	42.4
110 (1210)	10	89.4	14.5	107	17.7	124	21.0	132	22.7	141	24.4	152	25.9	155	25.0
	12	89.4	14.8	107	18.0	124	21.4	132	23.1	141	24.9	150	25.8	153	24.9
	14	89.4	15.0	107	18.3	124	21.8	132	23.6	141	25.4	148	25.6	151	24.9
	16	89.4	15.3	107	18.7	124	22.2	132	24.0	141	25.8	146	26.0	149	26.2
	18	89.4	15.6	107	19.1	124	22.7	132	24.7	141	27.1	144	27.3	147	27.5
	20	89.4	15.9	107	19.4	124	24.0	132	26.5	139	28.4	142	28.6	145	28.9
	21	89.4	16.1	107	20.0	124	24.9	132	27.5	138	29.1	141	29.3	144	29.6
	23	89.4	16.8	107	21.5	124	26.7	132	29.5	136	30.4	139	30.7	142	30.9
	25	89.4	18.0	107	22.9	124	28.5	132	31.6	134	31.7	137	32.0	141	32.3
	27	89.4	19.2	107	24.5	124	30.5	130	32.9	132	33.1	135	33.4	139	33.6
	29	89.4	20.4	107	26.2	124	32.6	129	34.2	130	34.4	133	34.7	137	35.0
	31	89.4	21.8	107	27.9	124	34.8	127	35.6	128	35.7	131	36.1	135	36.4
	33	89.4	23.2	107	29.7	123	36.7	125	36.9	126	37.1	129	37.4	133	37.8
	35	89.4	24.6	107	31.7	121	38.1	123	38.3	124	38.4	127	38.8	131	39.2
	37	89.4	26.2	107	33.8	119	39.4	121	39.6	122	39.8	126	40.2	129	40.6
	39	89.4	27.9	107	35.9	117	40.8	119	41.0	120	41.2	124	41.6	127	42.0
100 (1100)	10	81.3	13.1	96.9	15.9	113	18.8	120	20.3	128	21.9	144	25.0	152	25.9
	12	81.3	13.3	96.9	16.2	113	19.2	120	20.7	128	22.3	144	25.5	150	25.7
	14	81.3	13.6	96.9	16.5	113	19.5	120	21.1	128	22.7	144	25.9	148	25.6
	16	81.3	13.8	96.9	16.8	113	19.9	120	21.5	128	23.1	143	26.3	146	26.0
	18	81.3	14.1	96.9	17.1	113	20.3	120	21.9	128	23.6	141	27.1	144	27.3
	20	81.3	14.3	96.9	17.4	113	20.9	120	23.0	128	25.3	139	28.4	142	28.7
	21	81.3	14.5	96.9	17.6	113	21.7	120	23.9	128	26.2	139	29.1	141	29.3
	23	81.3	14.9	96.9	18.8	113	23.2	120	25.6	128	28.1	137	30.4	139	30.7
	25	81.3	15.8	96.9	20.1	113	24.8	120	27.4	128	30.1	135	31.8	138	32.0
	27	81.3	16.9	96.9	21.4	113	26.5	120	29.3	128	32.2	133	33.1	136	33.4
	29	81.3	18.0	96.9	22.9	113	28.3	120	31.3	128	34.2	131	34.4	134	34.7
	31	81.3	19.1	96.9	24.4	113	30.2	120	33.4	126	35.5	129	35.8	132	36.1
	33	81.3	20.4	96.9	25.9	113	32.2	120	35.6	124	36.8	127	37.1	130	37.5
	35	81.3	21.6	96.9	27.6	113	34.3	120	38.0	122	38.2	125	38.5	128	38.8
	37	81.3	23.0	96.9	29.4	113	36.6	118	39.3	120	39.5	123	39.9	126	40.2
	39	81.3	24.4	96.9	31.3	113	39.0	116	40.7	118	40.9	121	41.2	124	41.6

Cooling capacity

Combination(%) (Capacity index)	Outdoor air temp. °CDB	Indoor air temp. 14.0°CWB TC kW	14.0°CWB PI kW	16.0°CWB TC kW	16.0°CWB PI kW	18.0°CWB TC kW	18.0°CWB PI kW	19.0°CWB TC kW	19.0°CWB PI kW	20.0°CWB TC kW	20.0°CWB PI kW	22.0°CWB TC kW	22.0°CWB PI kW	24.0°CWB TC kW	24.0°CWB PI kW
90 (990)	10	73.1	11.7	87.2	14.1	101	16.7	108	18.0	115	19.4	129	22.1	144	24.9
	12	73.1	11.9	87.2	14.4	101	17.0	108	18.3	115	19.7	129	22.5	144	25.4
	14	73.1	12.1	87.2	14.6	101	17.3	108	18.7	115	20.1	129	23.0	144	25.9
	16	73.1	12.3	87.2	14.9	101	17.6	108	19.1	115	20.5	129	23.4	143	26.3
	18	73.1	12.6	87.2	15.2	101	18.0	108	19.4	115	20.9	129	23.9	141	27.1
	20	73.1	12.8	87.2	15.5	101	18.3	108	19.8	115	21.7	129	25.7	139	28.4
	21	73.1	12.9	87.2	15.6	101	18.7	108	20.5	115	22.4	129	26.6	138	29.1
	23	73.1	13.2	87.2	16.3	101	20.0	108	22.0	115	24.0	129	28.5	136	30.4
	25	73.1	13.9	87.2	17.4	101	21.4	108	23.5	115	25.7	129	30.5	135	31.8
	27	73.1	14.8	87.2	18.6	101	22.8	108	25.1	115	27.5	129	32.7	133	33.1
	29	73.1	15.7	87.2	19.8	101	24.3	108	26.8	115	29.4	128	34.2	131	34.4
	31	73.1	16.7	87.2	21.0	101	25.9	108	28.6	115	31.4	126	35.5	129	35.8
	33	73.1	17.7	87.2	22.4	101	27.6	108	30.5	115	33.4	124	36.9	127	37.1
	35	73.1	18.8	87.2	23.8	101	29.4	108	32.5	115	35.6	122	38.2	125	38.5
	37	73.1	20.0	87.2	25.3	101	31.3	108	34.6	115	38.0	120	39.5	123	39.9
	39	73.1	21.2	87.2	26.9	101	33.3	108	36.8	115	40.5	118	40.9	121	41.2
80 (880)	10	65.0	10.4	77.5	12.5	90.1	14.6	96.3	15.8	103	16.9	115	19.3	128	21.7
	12	65.0	10.6	77.5	12.7	90.1	14.9	96.3	16.1	103	17.2	115	19.7	128	22.2
	14	65.0	10.7	77.5	12.9	90.1	15.2	96.3	16.4	103	17.6	115	20.0	128	22.6
	16	65.0	10.9	77.5	13.1	90.1	15.5	96.3	16.7	103	17.9	115	20.4	128	23.0
	18	65.0	11.1	77.5	13.4	90.1	15.8	96.3	17.0	103	18.2	115	20.8	128	23.5
	20	65.0	11.3	77.5	13.6	90.1	16.1	96.3	17.3	103	18.6	115	21.6	128	25.1
	21	65.0	11.4	77.5	13.7	90.1	16.2	96.3	17.5	103	19.0	115	22.4	128	26.0
	23	65.0	11.6	77.5	14.0	90.1	17.0	96.3	18.6	103	20.3	115	24.0	128	27.9
	25	65.0	12.0	77.5	14.9	90.1	18.2	96.3	19.9	103	21.7	115	25.6	128	29.9
	27	65.0	12.8	77.5	15.9	90.1	19.4	96.3	21.2	103	23.2	115	27.4	128	32.0
	29	65.0	13.6	77.5	16.9	90.1	20.6	96.3	22.7	103	24.8	115	29.3	128	34.1
	31	65.0	14.4	77.5	18.0	90.1	22.0	96.3	24.1	103	26.4	115	31.2	126	35.5
	33	65.0	15.3	77.5	19.1	90.1	23.4	96.3	25.7	103	28.1	115	33.3	124	36.8
	35	65.0	16.2	77.5	20.3	90.1	24.9	96.3	27.4	103	30.0	115	35.5	122	38.2
	37	65.0	17.2	77.5	21.6	90.1	26.5	96.3	29.1	103	31.9	115	37.8	120	39.5
	39	65.0	18.2	77.5	22.9	90.1	28.1	96.3	31.0	103	34.0	115	40.3	118	40.9
70 (770)	10	56.9	9.15	67.8	10.9	78.8	12.7	84.3	13.6	89.8	14.6	101	16.6	112	18.6
	12	56.9	9.3	67.8	11.0	78.8	12.9	84.3	13.9	89.8	14.8	101	16.9	112	19.0
	14	56.9	9.4	67.8	11.2	78.8	13.1	84.3	14.1	89.8	15.1	101	17.2	112	19.4
	16	56.9	9.6	67.8	11.4	78.8	13.4	84.3	14.4	89.8	15.4	101	17.5	112	19.7
	18	56.9	9.7	67.8	11.6	78.8	13.6	84.3	14.6	89.8	15.7	101	17.9	112	20.1
	20	56.9	9.9	67.8	11.8	78.8	13.9	84.3	14.9	89.8	16.0	101	18.2	112	20.7
	21	56.9	10.0	67.8	11.9	78.8	14.0	84.3	15.1	89.8	16.2	101	18.5	112	21.4
	23	56.9	10.2	67.8	12.2	78.8	14.3	84.3	15.6	89.8	16.9	101	19.8	112	22.9
	25	56.9	10.3	67.8	12.6	78.8	15.2	84.3	16.6	89.8	18.1	101	21.2	112	24.5
	27	56.9	10.9	67.8	13.4	78.8	16.2	84.3	17.7	89.8	19.3	101	22.6	112	26.2
	29	56.9	11.6	67.8	14.3	78.8	17.3	84.3	18.9	89.8	20.6	101	24.1	112	28.0
	31	56.9	12.3	67.8	15.2	78.8	18.4	84.3	20.1	89.8	21.9	101	25.7	112	29.9
	33	56.9	13.0	67.8	16.1	78.8	19.5	84.3	21.4	89.8	23.3	101	27.4	112	31.9
	35	56.9	13.8	67.8	17.1	78.8	20.8	84.3	22.7	89.8	24.8	101	29.2	112	33.9
	37	56.9	14.6	67.8	18.1	78.8	22.0	84.3	24.2	89.8	26.4	101	31.1	112	36.2
	39	56.9	15.5	67.8	19.2	78.8	23.4	84.3	25.7	89.8	28.0	101	33.1	112	38.5
60 (660)	10	48.8	7.96	58.1	9.3	67.5	10.8	72.2	11.6	76.9	12.4	86.3	14.0	95.7	15.7
	12	48.8	8.07	58.1	9.5	67.5	11.0	72.2	11.8	76.9	12.6	86.3	14.2	95.7	15.9
	14	48.8	8.19	58.1	9.6	67.5	11.2	72.2	12.0	76.9	12.8	86.3	14.5	95.7	16.2
	16	48.8	8.31	58.1	9.8	67.5	11.4	72.2	12.2	76.9	13.0	86.3	14.8	95.7	16.5
	18	48.8	8.44	58.1	10.0	67.5	11.6	72.2	12.4	76.9	13.3	86.3	15.0	95.7	16.9
	20	48.8	8.57	58.1	10.1	67.5	11.8	72.2	12.6	76.9	13.5	86.3	15.3	95.7	17.2
	21	48.8	8.64	58.1	10.2	67.5	11.9	72.2	12.7	76.9	13.6	86.3	15.5	95.7	17.4
	23	48.8	8.78	58.1	10.4	67.5	12.1	72.2	13.0	76.9	13.9	86.3	16.1	95.7	18.5
	25	48.8	8.93	58.1	10.6	67.5	12.6	72.2	13.6	76.9	14.8	86.3	17.2	95.7	19.7
	27	48.8	9.3	58.1	11.2	67.5	13.4	72.2	14.5	76.9	15.7	86.3	18.3	95.7	21.1
	29	48.8	9.8	58.1	11.9	67.5	14.2	72.2	15.5	76.9	16.7	86.3	19.5	95.7	22.5
	31	48.8	10.4	58.1	12.6	67.5	15.1	72.2	16.4	76.9	17.8	86.3	20.8	95.7	23.9
	33	48.8	11.0	58.1	13.4	67.5	16.0	72.2	17.5	76.9	18.9	86.3	22.1	95.7	25.5
	35	48.8	11.6	58.1	14.2	67.5	17.0	72.2	18.5	76.9	20.1	86.3	23.5	95.7	27.1
	37	48.8	12.3	58.1	15.0	67.5	18.0	72.2	19.7	76.9	21.4	86.3	25.0	95.7	28.9
	39	48.8	13.0	58.1	15.9	67.5	19.1	72.2	20.9	76.9	22.7	86.3	26.5	95.7	30.7
50 (550)	10	40.6	6.84	48.5	7.92	56.3	9.06	60.2	9.7	64.1	10.3	71.9	11.5	79.8	12.8
	12	40.6	6.93	48.5	8.03	56.3	9.2	60.2	9.8	64.1	10.4	71.9	11.7	79.8	13.1
	14	40.6	7.02	48.5	8.14	56.3	9.3	60.2	10.0	64.1	10.6	71.9	11.9	79.8	13.3
	16	40.6	7.12	48.5	8.27	56.3	9.5	60.2	10.1	64.1	10.8	71.9	12.1	79.8	13.5
	18	40.6	7.21	48.5	8.39	56.3	9.6	60.2	10.3	64.1	11.0	71.9	12.3	79.8	13.8
	20	40.6	7.32	48.5	8.52	56.3	9.8	60.2	10.5	64.1	11.2	71.9	12.6	79.8	14.0
	21	40.6	7.37	48.5	8.59	56.3	9.9	60.2	10.6	64.1	11.3	71.9	12.7	79.8	14.2
	23	40.6	7.48	48.5	8.73	56.3	10.1	60.2	10.8	64.1	11.5	71.9	12.9	79.8	14.5
	25	40.6	7.59	48.5	8.88	56.3	10.2	60.2	11.0	64.1	11.8	71.9	13.6	79.8	15.5
	27	40.6	7.72	48.5	9.19	56.3	10.8	60.2	11.7	64.1	12.6	71.9	14.5	79.8	16.5
	29	40.6	8.16	48.5	9.7	56.3	11.5	60.2	12.4	64.1	13.3	71.9	15.4	79.8	17.6
	31	40.6	8.63	48.5	10.3	56.3	12.2	60.2	13.1	64.1	14.2	71.9	16.3	79.8	18.7
	33	40.6	9.11	48.5	10.9	56.3	12.9	60.2	13.9	64.1	15.0	71.9	17.4	79.8	19.9
	35	40.6	9.6	48.5	11.5	56.3	13.6	60.2	14.8	64.1	15.9	71.9	18.4	79.8	21.1
	37	40.6	10.1	48.5	12.2	56.3	14.4	60.2	15.6	64.1	16.9	71.9	19.6	79.8	22.4
	39	40.6	10.7	48.5	12.9	56.3	15.3	60.2	16.6	64.1	17.9	71.9	20.7	79.8	23.8

TC Total capacity ; kW
PI Power Input ; kW(Comp.+Outdoor fan motor)
Note1: The above table shows the average value of conditions which may occur.

RXQ46PY1 [50Hz]

Cooling capacity

Combination(%) (Capacity index)	Outdoor air temp. °CDB	Indoor air temp. 14.0°CWB TC kW	14.0°CWB PI kW	16.0°CWB TC kW	16.0°CWB PI kW	18.0°CWB TC kW	18.0°CWB PI kW	19.0°CWB TC kW	19.0°CWB PI kW	20.0°CWB TC kW	20.0°CWB PI kW	22.0°CWB TC kW	22.0°CWB PI kW	24.0°CWB TC kW	24.0°CWB PI kW
130 (1495)	10	111	18.7	132	22.9	153	27.3	159	27.9	161	27.3	165	26.1	169	25.0
	12	111	19.1	132	23.4	153	27.8	157	27.7	159	27.1	163	26.0	167	25.6
	14	111	19.4	132	23.8	153	28.2	155	27.6	157	27.0	161	26.8	165	27.0
	16	111	19.8	132	24.3	151	28.0	153	27.8	155	27.9	159	28.2	163	28.5
	18	111	20.2	132	24.8	149	29.1	150	29.2	152	29.4	156	29.7	160	29.9
	20	111	20.6	132	26.4	146	30.5	148	30.7	150	30.8	154	31.1	158	31.4
	21	111	21.2	132	27.3	145	31.2	147	31.4	149	31.5	153	31.8	157	32.2
	23	111	22.7	132	29.3	143	32.6	145	32.8	147	33.0	151	33.3	155	33.6
	25	111	24.3	132	31.4	141	34.1	143	34.2	145	34.4	149	34.8	153	35.1
	27	111	25.9	132	33.6	139	35.5	141	35.7	143	35.9	147	36.2	151	36.6
	29	111	27.7	132	35.9	137	36.9	139	37.1	141	37.3	145	37.7	149	38.1
	31	111	29.5	131	38.0	135	38.4	137	38.6	139	38.8	143	39.2	147	39.6
	33	111	31.4	129	39.4	133	39.8	135	40.1	137	40.3	141	40.7	145	41.2
	35	111	33.5	127	40.8	131	41.3	133	41.5	135	41.8	139	42.2	143	42.7
	37	111	35.7	125	42.3	129	42.8	131	43.0	133	43.3	137	43.7	141	44.2
	39	111	38.0	123	43.7	127	44.2	129	44.5	131	44.8	135	45.3	139	45.8
120 (1380)	10	102	17.1	122	20.9	141	24.9	151	26.9	158	28.0	162	27.0	166	25.9
	12	102	17.4	122	21.3	141	25.3	151	27.4	156	27.9	160	26.8	163	25.7
	14	102	17.8	122	21.7	141	25.8	151	27.9	154	27.7	158	26.6	161	26.8
	16	102	18.1	122	22.1	141	26.3	150	28.1	152	27.8	156	28.0	159	28.3
	18	102	18.4	122	22.6	141	27.2	148	29.1	150	29.2	154	29.5	157	29.7
	20	102	18.8	122	23.5	141	29.3	146	30.5	148	30.6	152	30.9	155	31.2
	21	102	19.0	122	24.3	141	30.3	145	31.2	147	31.3	151	31.6	154	31.9
	23	102	20.3	122	26.0	141	32.5	143	32.6	145	32.8	149	33.1	152	33.4
	25	102	21.7	122	27.9	139	33.9	141	34.0	143	34.2	146	34.5	150	34.8
	27	102	23.1	122	29.8	137	35.3	139	35.5	141	35.6	144	36.0	148	36.3
	29	102	24.7	122	31.8	135	36.7	137	36.9	139	37.1	142	37.5	146	37.8
	31	102	26.3	122	34.0	133	38.2	135	38.3	137	38.5	140	38.9	144	39.3
	33	102	28.0	122	36.2	131	39.6	133	39.8	135	40.0	138	40.4	142	40.8
	35	102	29.8	122	38.6	129	41.0	131	41.3	133	41.5	136	41.9	140	42.3
	37	102	31.7	122	41.2	127	42.5	129	42.7	131	42.9	134	43.4	138	43.9
	39	102	33.8	121	43.5	125	43.9	127	44.2	128	44.4	132	44.9	136	45.4
110 (1265)	10	93.5	15.5	112	18.9	130	22.5	139	24.3	148	26.1	159	27.8	162	26.8
	12	93.5	15.8	112	19.3	130	22.9	139	24.8	148	26.6	157	27.6	160	26.6
	14	93.5	16.1	112	19.7	130	23.3	139	25.2	148	27.2	155	27.5	158	26.6
	16	93.5	16.4	112	20.0	130	23.8	139	25.7	148	27.7	153	27.8	156	28.1
	18	93.5	16.7	112	20.4	130	24.3	139	26.4	147	29.0	151	29.3	154	29.5
	20	93.5	17.1	112	20.8	130	25.7	139	28.4	145	30.4	149	30.7	152	30.9
	21	93.5	17.2	112	21.5	130	26.6	139	29.4	144	31.1	148	31.4	151	31.7
	23	93.5	18.0	112	23.0	130	28.6	139	31.6	142	32.6	146	32.8	149	33.1
	25	93.5	19.3	112	24.6	130	30.6	139	33.8	140	34.0	144	34.3	147	34.6
	27	93.5	20.5	112	26.3	130	32.7	137	35.2	138	35.4	142	35.7	145	36.0
	29	93.5	21.9	112	28.0	130	34.9	135	36.7	136	36.8	140	37.2	143	37.5
	31	93.5	23.3	112	29.9	130	37.3	132	38.1	134	38.3	138	38.6	141	39.0
	33	93.5	24.8	112	31.9	129	39.3	130	39.5	132	39.7	135	40.1	139	40.5
	35	93.5	26.4	112	33.9	127	40.8	128	41.0	130	41.2	133	41.6	137	42.0
	37	93.5	28.1	112	36.2	125	42.2	126	42.4	128	42.6	131	43.1	135	43.5
	39	93.5	29.8	112	38.5	123	43.7	124	43.9	126	44.1	129	44.5	133	45.0
100 (1150)	10	85.0	14.0	101	17.0	118	20.1	126	21.8	134	23.4	151	26.8	159	27.7
	12	85.0	14.3	101	17.3	118	20.5	126	22.2	134	23.9	151	27.3	157	27.5
	14	85.0	14.5	101	17.6	118	20.9	126	22.6	134	24.3	151	27.8	155	27.4
	16	85.0	14.8	101	18.0	118	21.3	126	23.0	134	24.8	150	28.2	153	27.9
	18	85.0	15.1	101	18.3	118	21.7	126	23.5	134	25.3	148	29.1	151	29.3
	20	85.0	15.3	101	18.7	118	22.4	126	24.7	134	27.1	146	30.5	149	30.7
	21	85.0	15.5	101	18.9	118	23.2	126	25.6	134	28.1	145	31.2	148	31.4
	23	85.0	15.9	101	20.1	118	24.8	126	27.4	134	30.1	143	32.6	146	32.9
	25	85.0	17.0	101	21.5	118	26.6	126	29.3	134	32.2	141	34.0	144	34.3
	27	85.0	18.1	101	22.9	118	28.4	126	31.4	134	34.5	139	35.5	142	35.7
	29	85.0	19.3	101	24.5	118	30.3	126	33.5	134	36.6	137	36.9	140	37.2
	31	85.0	20.5	101	26.1	118	32.4	126	35.8	132	38.0	135	38.3	138	38.7
	33	85.0	21.8	101	27.8	118	34.5	126	38.2	130	39.4	133	39.8	136	40.1
	35	85.0	23.2	101	29.6	118	36.8	126	40.7	128	40.9	131	41.2	134	41.6
	37	85.0	24.6	101	31.5	118	39.2	124	42.1	125	42.3	129	42.7	132	43.1
	39	85.0	26.1	101	33.5	118	41.8	122	43.6	123	43.8	127	44.2	130	44.6

Cooling capacity

Combination(%) (Capacity index)	Outdoor air temp. °CDB	Indoor air temp. 14.0°CWB TC kW	14.0°CWB PI kW	16.0°CWB TC kW	16.0°CWB PI kW	18.0°CWB TC kW	18.0°CWB PI kW	19.0°CWB TC kW	19.0°CWB PI kW	20.0°CWB TC kW	20.0°CWB PI kW	22.0°CWB TC kW	22.0°CWB PI kW	24.0°CWB TC kW	24.0°CWB PI kW
90 (1035)	10	76.5	12.6	91.3	15.1	106	17.9	113	19.3	121	20.7	136	23.7	150	26.7
	12	76.5	12.8	91.3	15.4	106	18.2	113	19.6	121	21.1	136	24.1	150	27.2
	14	76.5	13.0	91.3	15.7	106	18.5	113	20.0	121	21.5	136	24.6	150	27.7
	16	76.5	13.2	91.3	16.0	106	18.9	113	20.4	121	21.9	136	25.1	150	28.2
	18	76.5	13.5	91.3	16.3	106	19.3	113	20.8	121	22.4	136	25.6	148	29.1
	20	76.5	13.7	91.3	16.6	106	19.7	113	21.2	121	23.2	136	27.5	146	30.5
	21	76.5	13.8	91.3	16.8	106	20.0	113	22.0	121	24.0	136	28.5	145	31.2
	23	76.5	14.1	91.3	17.5	106	21.4	113	23.5	121	25.8	136	30.5	143	32.6
	25	76.5	14.8	91.3	18.6	106	22.9	113	25.2	121	27.6	136	32.7	141	34.0
	27	76.5	15.8	91.3	19.9	106	24.4	113	26.9	121	29.5	136	35.0	139	35.4
	29	76.5	16.8	91.3	21.2	106	26.1	113	28.7	121	31.5	134	36.6	137	36.9
	31	76.5	17.9	91.3	22.5	106	27.8	113	30.6	121	33.6	132	38.0	135	38.3
	33	76.5	19.0	91.3	24.0	106	29.6	113	32.6	121	35.8	130	39.5	133	39.8
	35	76.5	20.2	91.3	25.5	106	31.5	113	34.8	121	38.2	128	40.9	131	41.2
	37	76.5	21.4	91.3	27.1	106	33.6	113	37.0	121	40.7	126	42.4	128	42.7
	39	76.5	22.7	91.3	28.8	106	35.7	113	39.4	121	43.4	124	43.8	126	44.2
80 (920)	10	68.0	11.1	81.1	13.3	94.2	15.7	101	16.9	107	18.1	120	20.7	134	23.3
	12	68.0	11.3	81.1	13.6	94.2	16.0	101	17.2	107	18.5	120	21.1	134	23.7
	14	68.0	11.5	81.1	13.8	94.2	16.3	101	17.5	107	18.8	120	21.5	134	24.2
	16	68.0	11.7	81.1	14.1	94.2	16.6	101	17.8	107	19.2	120	21.9	134	24.7
	18	68.0	11.9	81.1	14.3	94.2	16.9	101	18.2	107	19.5	120	22.3	134	25.1
	20	68.0	12.1	81.1	14.6	94.2	17.2	101	18.6	107	19.9	120	23.1	134	26.9
	21	68.0	12.2	81.1	14.7	94.2	17.4	101	18.7	107	20.3	120	23.9	134	27.9
	23	68.0	12.5	81.1	15.0	94.2	18.2	101	19.9	107	21.8	120	25.7	134	29.9
	25	68.0	12.9	81.1	16.0	94.2	19.4	101	21.3	107	23.3	120	27.5	134	32.0
	27	68.0	13.7	81.1	17.0	94.2	20.7	101	22.8	107	24.9	120	29.3	134	34.2
	29	68.0	14.5	81.1	18.1	94.2	22.1	101	24.3	107	26.5	120	31.3	134	36.6
	31	68.0	15.4	81.1	19.3	94.2	23.6	101	25.9	107	28.3	120	33.5	132	38.0
	33	68.0	16.4	81.1	20.5	94.2	25.1	101	27.5	107	30.1	120	35.7	129	39.4
	35	68.0	17.4	81.1	21.8	94.2	26.7	101	29.3	107	32.1	120	38.0	127	40.9
	37	68.0	18.4	81.1	23.1	94.2	28.4	101	31.2	107	34.2	120	40.5	125	42.3
	39	68.0	19.5	81.1	24.5	94.2	30.2	101	33.2	107	36.4	120	43.2	123	43.8
70 (805)	10	59.5	9.8	71.0	11.6	82.5	13.6	88.2	14.6	93.9	15.6	105	17.8	117	20.0
	12	59.5	9.9	71.0	11.8	82.5	13.8	88.2	14.8	93.9	15.9	105	18.1	117	20.3
	14	59.5	10.1	71.0	12.0	82.5	14.1	88.2	15.1	93.9	16.2	105	18.4	117	20.7
	16	59.5	10.3	71.0	12.2	82.5	14.3	88.2	15.4	93.9	16.5	105	18.8	117	21.1
	18	59.5	10.4	71.0	12.4	82.5	14.6	88.2	15.7	93.9	16.8	105	19.1	117	21.5
	20	59.5	10.6	71.0	12.7	82.5	14.8	88.2	16.0	93.9	17.1	105	19.5	117	22.1
	21	59.5	10.7	71.0	12.8	82.5	15.0	88.2	16.1	93.9	17.3	105	19.8	117	22.9
	23	59.5	10.9	71.0	13.0	82.5	15.3	88.2	16.7	93.9	18.1	105	21.2	117	24.6
	25	59.5	11.1	71.0	13.5	82.5	16.3	88.2	17.8	93.9	19.4	105	22.7	117	26.3
	27	59.5	11.7	71.0	14.4	82.5	17.4	88.2	19.0	93.9	20.7	105	24.2	117	28.1
	29	59.5	12.4	71.0	15.3	82.5	18.5	88.2	20.2	93.9	22.0	105	25.8	117	30.0
	31	59.5	13.2	71.0	16.3	82.5	19.7	88.2	21.5	93.9	23.4	105	27.5	117	32.0
	33	59.5	14.0	71.0	17.3	82.5	20.9	88.2	22.9	93.9	25.0	105	29.4	117	34.1
	35	59.5	14.8	71.0	18.3	82.5	22.2	88.2	24.3	93.9	26.5	105	31.3	117	36.4
	37	59.5	15.7	71.0	19.4	82.5	23.6	88.2	25.9	93.9	28.2	105	33.3	117	38.7
	39	59.5	16.6	71.0	20.6	82.5	25.1	88.2	27.5	93.9	30.0	105	35.4	117	41.3
60 (690)	10	51.0	8.52	60.9	10.0	70.7	11.6	75.6	12.4	80.5	13.2	90.3	15.0	100	16.8
	12	51.0	8.64	60.9	10.2	70.7	11.8	75.6	12.6	80.5	13.5	90.3	15.2	100	17.1
	14	51.0	8.77	60.9	10.3	70.7	12.0	75.6	12.8	80.5	13.7	90.3	15.5	100	17.4
	16	51.0	8.90	60.9	10.5	70.7	12.2	75.6	13.0	80.5	13.9	90.3	15.8	100	17.7
	18	51.0	9.0	60.9	10.7	70.7	12.4	75.6	13.3	80.5	14.2	90.3	16.1	100	18.1
	20	51.0	9.2	60.9	10.8	70.7	12.6	75.6	13.5	80.5	14.5	90.3	16.4	100	18.4
	21	51.0	9.3	60.9	10.9	70.7	12.7	75.6	13.7	80.5	14.6	90.3	16.6	100	18.6
	23	51.0	9.4	60.9	11.1	70.7	13.0	75.6	13.9	80.5	14.9	90.3	17.2	100	19.8
	25	51.0	9.6	60.9	11.3	70.7	13.5	75.6	14.6	80.5	15.8	90.3	18.4	100	21.1
	27	51.0	9.9	60.9	12.0	70.7	14.3	75.6	15.6	80.5	16.9	90.3	19.6	100	22.6
	29	51.0	10.5	60.9	12.7	70.7	15.2	75.6	16.6	80.5	17.9	90.3	20.9	100	24.1
	31	51.0	11.1	60.9	13.5	70.7	16.2	75.6	17.6	80.5	19.1	90.3	22.2	100	25.6
	33	51.0	11.8	60.9	14.3	70.7	17.2	75.6	18.7	80.5	20.3	90.3	23.7	100	27.3
	35	51.0	12.4	60.9	15.2	70.7	18.2	75.6	19.8	80.5	21.5	90.3	25.2	100	29.1
	37	51.0	13.1	60.9	16.1	70.7	19.3	75.6	21.1	80.5	22.9	90.3	26.7	100	30.9
	39	51.0	13.9	60.9	17.0	70.7	20.5	75.6	22.3	80.5	24.3	90.3	28.4	100	32.9
50 (575)	10	42.5	7.33	50.7	8.48	58.9	9.7	63.0	10.3	67.1	11.0	75.3	12.3	83.5	13.8
	12	42.5	7.42	50.7	8.60	58.9	9.9	63.0	10.5	67.1	11.2	75.3	12.6	83.5	14.0
	14	42.5	7.52	50.7	8.72	58.9	10.0	63.0	10.7	67.1	11.4	75.3	12.8	83.5	14.2
	16	42.5	7.62	50.7	8.85	58.9	10.2	63.0	10.8	67.1	11.5	75.3	13.0	83.5	14.5
	18	42.5	7.73	50.7	9.0	58.9	10.3	63.0	11.0	67.1	11.7	75.3	13.2	83.5	14.8
	20	42.5	7.84	50.7	9.1	58.9	10.5	63.0	11.2	67.1	11.9	75.3	13.5	83.5	15.0
	21	42.5	7.89	50.7	9.2	58.9	10.6	63.0	11.3	67.1	12.1	75.3	13.6	83.5	15.2
	23	42.5	8.01	50.7	9.4	58.9	10.8	63.0	11.5	67.1	12.3	75.3	13.8	83.5	15.5
	25	42.5	8.13	50.7	9.5	58.9	11.0	63.0	11.8	67.1	12.7	75.3	14.5	83.5	16.6
	27	42.5	8.27	50.7	9.8	58.9	11.6	63.0	12.5	67.1	13.5	75.3	15.5	83.5	17.7
	29	42.5	8.74	50.7	10.4	58.9	12.3	63.0	13.3	67.1	14.3	75.3	16.5	83.5	18.8
	31	42.5	9.2	50.7	11.0	58.9	13.0	63.0	14.1	67.1	15.2	75.3	17.5	83.5	20.0
	33	42.5	9.8	50.7	11.7	58.9	13.8	63.0	14.9	67.1	16.1	75.3	18.6	83.5	21.3
	35	42.5	10.3	50.7	12.4	58.9	14.6	63.0	15.8	67.1	17.1	75.3	19.7	83.5	22.6
	37	42.5	10.9	50.7	13.1	58.9	15.5	63.0	16.8	67.1	18.1	75.3	20.9	83.5	24.0
	39	42.5	11.4	50.7	13.8	58.9	16.4	63.0	17.7	67.1	19.2	75.3	22.2	83.5	25.5

TC Total capacity ; kW
PI Power Input ; kW(Comp.+Outdoor fan motor)
Note1: The above table shows the average value of conditions which may occur.

RXQ48PY1 [50Hz]

Cooling capacity

Combination(%) (Capacity index)	Outdoor air temp. °CDB	Indoor air temp. 14.0°CWB TC kW	14.0°CWB PI kW	16.0°CWB TC kW	16.0°CWB PI kW	18.0°CWB TC kW	18.0°CWB PI kW	19.0°CWB TC kW	19.0°CWB PI kW	20.0°CWB TC kW	20.0°CWB PI kW	22.0°CWB TC kW	22.0°CWB PI kW	24.0°CWB TC kW	24.0°CWB PI kW
130 (1560)	10	115	19.2	138	23.5	160	28.0	166	28.5	168	28.0	172	26.8	176	25.6
	12	115	19.6	138	23.9	160	28.5	163	28.4	166	27.8	170	26.6	174	26.2
	14	115	19.9	138	24.4	159	28.8	161	28.2	163	27.6	168	27.4	172	27.7
	16	115	20.3	138	24.9	157	28.7	159	28.5	161	28.6	165	28.9	170	29.2
	18	115	20.7	138	25.4	155	29.8	157	30.0	159	30.1	163	30.4	167	30.7
	20	115	21.1	138	27.0	153	31.3	155	31.4	157	31.6	161	31.9	165	32.2
	21	115	21.7	138	28.0	152	32.0	154	32.1	156	32.3	160	32.6	164	32.9
	23	115	23.2	138	30.0	150	33.4	152	33.6	154	33.8	158	34.1	162	34.5
	25	115	24.9	138	32.1	147	34.9	150	35.1	152	35.3	156	35.6	160	36.0
	27	115	26.6	138	34.4	145	36.4	147	36.6	150	36.8	154	37.1	158	37.5
	29	115	28.3	138	36.7	143	37.8	145	38.1	147	38.3	152	38.7	156	39.1
	31	115	30.2	137	38.9	141	39.3	143	39.5	145	39.8	149	40.2	154	40.6
	33	115	32.2	135	40.4	139	40.8	141	41.0	143	41.3	147	41.7	151	42.2
	35	115	34.3	133	41.8	137	42.3	139	42.6	141	42.8	145	43.3	149	43.7
	37	115	36.5	131	43.3	135	43.8	137	44.1	139	44.3	143	44.8	147	45.3
	39	115	38.9	128	44.8	133	45.3	135	45.6	137	45.9	141	46.4	145	46.9
120 (1440)	10	106	17.5	127	21.4	148	25.5	158	27.5	165	28.7	169	27.6	173	26.5
	12	106	17.9	127	21.8	148	26.0	158	28.1	163	28.6	167	27.5	171	26.3
	14	106	18.2	127	22.2	148	26.5	158	28.6	161	28.4	165	27.3	168	27.5
	16	106	18.5	127	22.7	148	27.0	157	28.8	159	28.5	163	28.7	166	29.0
	18	106	18.9	127	23.1	148	27.9	155	29.8	157	29.9	160	30.2	164	30.5
	20	106	19.3	127	24.0	148	30.0	152	31.2	154	31.4	158	31.7	162	31.9
	21	106	19.5	127	24.9	148	31.1	151	32.0	153	32.1	157	32.4	161	32.7
	23	106	20.8	127	26.7	147	33.3	149	33.4	151	33.6	155	33.9	159	34.2
	25	106	22.2	127	28.6	145	34.7	147	34.9	149	35.0	153	35.4	157	35.7
	27	106	23.7	127	30.5	143	36.2	145	36.3	147	36.5	151	36.9	155	37.2
	29	106	25.3	127	32.6	141	37.6	143	37.8	145	38.0	149	38.4	152	38.7
	31	106	27.0	127	34.8	139	39.1	141	39.3	143	39.5	146	39.9	150	40.3
	33	106	28.7	127	37.1	137	40.6	139	40.8	140	41.0	144	41.4	148	41.8
	35	106	30.6	127	39.6	135	42.0	136	42.3	138	42.5	142	42.9	146	43.4
	37	106	32.5	127	42.2	132	43.5	134	43.8	136	44.0	140	44.5	144	44.9
	39	106	34.6	126	44.5	130	45.0	132	45.3	134	45.5	138	46.0	142	46.5
110 (1320)	10	98	15.9	116	19.4	135	23.0	145	24.9	154	26.8	166	28.4	169	27.5
	12	98	16.2	116	19.8	135	23.5	145	25.4	154	27.3	164	28.3	167	27.3
	14	98	16.5	116	20.1	135	23.9	145	25.9	154	27.8	162	28.1	165	27.3
	16	98	16.8	116	20.5	135	24.4	145	26.4	154	28.4	160	28.5	163	28.8
	18	98	17.1	116	20.9	135	24.9	145	27.1	154	29.7	157	30.0	161	30.2
	20	98	17.5	116	21.3	135	26.3	145	29.1	152	31.2	155	31.4	159	31.7
	21	98	17.6	116	22.0	135	27.3	145	30.2	151	31.9	154	32.2	158	32.4
	23	98	18.5	116	23.5	135	29.3	145	32.4	149	33.4	152	33.6	156	33.9
	25	98	19.7	116	25.2	135	31.3	145	34.7	146	34.8	150	35.1	153	35.4
	27	98	21.0	116	26.9	135	33.5	143	36.1	144	36.3	148	36.6	151	36.9
	29	98	22.4	116	28.7	135	35.8	140	37.6	142	37.7	146	38.1	149	38.4
	31	98	23.9	116	30.6	135	38.2	138	39.0	140	39.2	144	39.6	147	39.9
	33	98	25.4	116	32.6	134	40.3	136	40.5	138	40.7	141	41.1	145	41.5
	35	98	27.0	116	34.8	132	41.8	134	42.0	136	42.2	139	42.6	143	43.0
	37	98	28.8	116	37.0	130	43.3	132	43.5	134	43.7	137	44.1	141	44.5
	39	98	30.6	116	39.4	128	44.7	130	45.0	131	45.2	135	45.6	138	46.1
100 (1200)	10	88.7	14.4	106	17.4	123	20.6	132	22.3	140	24.0	157	27.4	166	28.4
	12	88.7	14.6	106	17.7	123	21.0	132	22.7	140	24.4	157	27.9	164	28.2
	14	88.7	14.9	106	18.1	123	21.4	132	23.2	140	24.9	157	28.5	162	28.1
	16	88.7	15.2	106	18.4	123	21.8	132	23.6	140	25.4	157	28.8	160	28.5
	18	88.7	15.4	106	18.8	123	22.3	132	24.1	140	25.9	154	29.8	158	30.0
	20	88.7	15.7	106	19.1	123	22.9	132	25.3	140	27.7	152	31.2	156	31.5
	21	88.7	15.9	106	19.3	123	23.8	132	26.2	140	28.7	151	31.9	154	32.2
	23	88.7	16.3	106	20.6	123	25.5	132	28.1	140	30.8	149	33.4	152	33.7
	25	88.7	17.4	106	22.0	123	27.2	132	30.0	140	33.0	147	34.9	150	35.1
	27	88.7	18.5	106	23.5	123	29.1	132	32.1	140	35.3	145	36.3	148	36.6
	29	88.7	19.7	106	25.1	123	31.1	132	34.3	140	37.5	143	37.8	146	38.1
	31	88.7	21.0	106	26.7	123	33.2	132	36.6	137	38.9	141	39.3	144	39.6
	33	88.7	22.3	106	28.5	123	35.4	132	39.1	135	40.4	138	40.8	142	41.1
	35	88.7	23.7	106	30.3	123	37.7	132	41.7	133	41.9	136	42.3	140	42.6
	37	88.7	25.2	106	32.2	123	40.2	129	43.2	131	43.4	134	43.8	137	44.1
	39	88.7	26.8	106	34.3	123	42.8	127	44.6	129	44.8	132	45.3	135	45.7

Cooling capacity

Combination(%) (Capacity index)	Outdoor air temp. °CDB	Indoor air temp. 14.0°CWB TC kW	14.0°CWB PI kW	16.0°CWB TC kW	16.0°CWB PI kW	18.0°CWB TC kW	18.0°CWB PI kW	19.0°CWB TC kW	19.0°CWB PI kW	20.0°CWB TC kW	20.0°CWB PI kW	22.0°CWB TC kW	22.0°CWB PI kW	24.0°CWB TC kW	24.0°CWB PI kW
90 (1080)	10	79.9	12.9	95.3	15.5	111	18.3	118	19.8	126	21.2	141	24.3	157	27.3
	12	79.9	13.1	95.3	15.8	111	18.7	118	20.1	126	21.6	141	24.7	157	27.9
	14	79.9	13.3	95.3	16.1	111	19.0	118	20.5	126	22.1	141	25.2	157	28.4
	16	79.9	13.5	95.3	16.4	111	19.4	118	20.9	126	22.5	141	25.7	157	28.9
	18	79.9	13.8	95.3	16.7	111	19.7	118	21.3	126	22.9	141	26.2	154	29.8
	20	79.9	14.0	95.3	17.0	111	20.1	118	21.7	126	23.8	141	28.2	152	31.2
	21	79.9	14.2	95.3	17.2	111	20.5	118	22.5	126	24.6	141	29.2	151	31.9
	23	79.9	14.4	95.3	17.9	111	21.9	118	24.1	126	26.4	141	31.3	149	33.4
	25	79.9	15.2	95.3	19.1	111	23.4	118	25.8	126	28.2	141	33.5	147	34.9
	27	79.9	16.2	95.3	20.4	111	25.0	118	27.5	126	30.2	141	35.8	145	36.3
	29	79.9	17.2	95.3	21.7	111	26.7	118	29.4	126	32.2	140	37.5	143	37.8
	31	79.9	18.3	95.3	23.1	111	28.5	118	31.4	126	34.4	138	39.0	141	39.3
	33	79.9	19.5	95.3	24.6	111	30.3	118	33.4	126	36.7	135	40.4	138	40.8
	35	79.9	20.7	95.3	26.1	111	32.3	118	35.6	126	39.1	133	41.9	136	42.2
	37	79.9	21.9	95.3	27.8	111	34.4	118	37.9	126	41.7	131	43.4	134	43.7
	39	79.9	23.3	95.3	29.5	111	36.6	118	40.4	126	44.4	129	44.9	132	45.3
80 (960)	10	71.0	11.4	84.7	13.7	98	16.1	105	17.3	112	18.6	126	21.2	139	23.9
	12	71.0	11.6	84.7	13.9	98	16.4	105	17.6	112	18.9	126	21.6	139	24.3
	14	71.0	11.8	84.7	14.2	98	16.7	105	17.9	112	19.3	126	22.0	139	24.8
	16	71.0	12.0	84.7	14.4	98	17.0	105	18.3	112	19.6	126	22.4	139	25.3
	18	71.0	12.2	84.7	14.7	98	17.3	105	18.6	112	20.0	126	22.9	139	25.8
	20	71.0	12.4	84.7	14.9	98	17.6	105	19.0	112	20.4	126	23.7	139	27.6
	21	71.0	12.5	84.7	15.1	98	17.8	105	19.2	112	20.8	126	24.5	139	28.5
	23	71.0	12.8	84.7	15.4	98	18.7	105	20.4	112	22.3	126	26.3	139	30.6
	25	71.0	13.2	84.7	16.4	98	19.9	105	21.8	112	23.8	126	28.1	139	32.8
	27	71.0	14.0	84.7	17.4	98	21.3	105	23.3	112	25.5	126	30.1	139	35.1
	29	71.0	14.9	84.7	18.6	98	22.7	105	24.9	112	27.2	126	32.1	139	37.5
	31	71.0	15.8	84.7	19.7	98	24.1	105	26.5	112	29.0	126	34.3	137	38.9
	33	71.0	16.8	84.7	21.0	98	25.7	105	28.2	112	30.9	126	36.6	135	40.4
	35	71.0	17.8	84.7	22.3	98	27.3	105	30.0	112	32.9	126	39.0	133	41.9
	37	71.0	18.9	84.7	23.7	98	29.1	105	32.0	112	35.0	126	41.5	131	43.3
	39	71.0	20.0	84.7	25.1	98	30.9	105	34.0	112	37.3	126	44.2	129	44.8
70 (840)	10	62.1	10.0	74.1	11.9	86.1	13.9	92.1	14.9	98	16.0	110	18.2	122	20.5
	12	62.1	10.2	74.1	12.1	86.1	14.1	92.1	15.2	98	16.3	110	18.5	122	20.8
	14	62.1	10.4	74.1	12.3	86.1	14.4	92.1	15.5	98	16.6	110	18.9	122	21.2
	16	62.1	10.5	74.1	12.5	86.1	14.7	92.1	15.8	98	16.9	110	19.2	122	21.6
	18	62.1	10.7	74.1	12.7	86.1	14.9	92.1	16.1	98	17.2	110	19.6	122	22.1
	20	62.1	10.9	74.1	13.0	86.1	15.2	92.1	16.4	98	17.6	110	20.0	122	22.7
	21	62.1	11.0	74.1	13.1	86.1	15.4	92.1	16.5	98	17.7	110	20.3	122	23.5
	23	62.1	11.2	74.1	13.3	86.1	15.7	92.1	17.1	98	18.6	110	21.7	122	25.2
	25	62.1	11.4	74.1	13.9	86.1	16.7	92.1	18.2	98	19.8	110	23.2	122	26.9
	27	62.1	12.0	74.1	14.8	86.1	17.8	92.1	19.4	98	21.2	110	24.8	122	28.8
	29	62.1	12.7	74.1	15.7	86.1	19.0	92.1	20.7	98	22.6	110	26.5	122	30.7
	31	62.1	13.5	74.1	16.7	86.1	20.2	92.1	22.1	98	24.0	110	28.2	122	32.8
	33	62.1	14.3	74.1	17.7	86.1	21.4	92.1	23.5	98	25.6	110	30.1	122	35.0
	35	62.1	15.2	74.1	18.8	86.1	22.8	92.1	24.9	98	27.2	110	32.0	122	37.3
	37	62.1	16.0	74.1	19.9	86.1	24.2	92.1	26.5	98	28.9	110	34.1	122	39.7
	39	62.1	17.0	74.1	21.1	86.1	25.7	92.1	28.2	98	30.7	110	36.3	122	42.3
60 (720)	10	53.2	8.7	63.5	10.2	73.8	11.9	78.9	12.7	84.0	13.6	94.3	15.3	105	17.2
	12	53.2	8.9	63.5	10.4	73.8	12.1	78.9	12.9	84.0	13.8	94.3	15.6	105	17.5
	14	53.2	9.0	63.5	10.6	73.8	12.3	78.9	13.1	84.0	14.0	94.3	15.9	105	17.8
	16	53.2	9.1	63.5	10.7	73.8	12.5	78.9	13.4	84.0	14.3	94.3	16.2	105	18.2
	18	53.2	9.3	63.5	10.9	73.8	12.7	78.9	13.6	84.0	14.5	94.3	16.5	105	18.5
	20	53.2	9.4	63.5	11.1	73.8	12.9	78.9	13.9	84.0	14.8	94.3	16.8	105	18.9
	21	53.2	9.5	63.5	11.2	73.8	13.0	78.9	14.0	84.0	15.0	94.3	17.0	105	19.1
	23	53.2	9.6	63.5	11.4	73.8	13.3	78.9	14.3	84.0	15.3	94.3	17.6	105	20.3
	25	53.2	9.8	63.5	11.6	73.8	13.8	78.9	15.0	84.0	16.2	94.3	18.8	105	21.7
	27	53.2	10.2	63.5	12.3	73.8	14.7	78.9	15.9	84.0	17.3	94.3	20.1	105	23.1
	29	53.2	10.8	63.5	13.1	73.8	15.6	78.9	17.0	84.0	18.4	94.3	21.4	105	24.7
	31	53.2	11.4	63.5	13.9	73.8	16.6	78.9	18.0	84.0	19.5	94.3	22.8	105	26.3
	33	53.2	12.1	63.5	14.7	73.8	17.6	78.9	19.1	84.0	20.8	94.3	24.2	105	28.0
	35	53.2	12.7	63.5	15.6	73.8	18.7	78.9	20.3	84.0	22.1	94.3	25.8	105	29.8
	37	53.2	13.5	63.5	16.5	73.8	19.8	78.9	21.6	84.0	23.4	94.3	27.4	105	31.7
	39	53.2	14.2	63.5	17.4	73.8	21.0	78.9	22.9	84.0	24.9	94.3	29.1	105	33.7
50 (600)	10	44.4	7.51	52.9	8.7	61.5	9.9	65.8	10.6	70.0	11.3	78.6	12.6	87.1	14.1
	12	44.4	7.60	52.9	8.8	61.5	10.1	65.8	10.8	70.0	11.4	78.6	12.9	87.1	14.3
	14	44.4	7.70	52.9	8.9	61.5	10.2	65.8	10.9	70.0	11.6	78.6	13.1	87.1	14.6
	16	44.4	7.81	52.9	9.1	61.5	10.4	65.8	11.1	70.0	11.8	78.6	13.3	87.1	14.9
	18	44.4	7.92	52.9	9.2	61.5	10.6	65.8	11.3	70.0	12.0	78.6	13.5	87.1	15.1
	20	44.4	8.03	52.9	9.4	61.5	10.8	65.8	11.5	70.0	12.2	78.6	13.8	87.1	15.4
	21	44.4	8.09	52.9	9.4	61.5	10.9	65.8	11.6	70.0	12.4	78.6	13.9	87.1	15.6
	23	44.4	8.21	52.9	9.6	61.5	11.0	65.8	11.8	70.0	12.6	78.6	14.2	87.1	15.9
	25	44.4	8.33	52.9	9.7	61.5	11.2	65.8	12.0	70.0	13.0	78.6	14.9	87.1	17.0
	27	44.4	8.47	52.9	10.1	61.5	11.9	65.8	12.8	70.0	13.8	78.6	15.9	87.1	18.1
	29	44.4	9.0	52.9	10.7	61.5	12.6	65.8	13.6	70.0	14.6	78.6	16.9	87.1	19.3
	31	44.4	9.5	52.9	11.3	61.5	13.3	65.8	14.4	70.0	15.6	78.6	17.9	87.1	20.5
	33	44.4	10.0	52.9	12.0	61.5	14.1	65.8	15.3	70.0	16.5	78.6	19.0	87.1	21.8
	35	44.4	10.5	52.9	12.7	61.5	15.0	65.8	16.2	70.0	17.5	78.6	20.2	87.1	23.2
	37	44.4	11.1	52.9	13.4	61.5	15.8	65.8	17.2	70.0	18.5	78.6	21.5	87.1	24.6
	39	44.4	11.7	52.9	14.1	61.5	16.8	65.8	18.2	70.0	19.6	78.6	22.8	87.1	26.1

TC Total capacity ; kW
PI Power Input ; kW(Comp.+Outdoor fan motor)
Note1: The above table shows the average value of conditions which may occur.

RXQ50PY1 [50Hz]

Cooling capacity

Combination(%) (Capacity index)	Outdoor air temp. °CDB	Indoor air temp. 14.0°CWB TC kW	14.0°CWB PI kW	16.0°CWB TC kW	16.0°CWB PI kW	18.0°CWB TC kW	18.0°CWB PI kW	19.0°CWB TC kW	19.0°CWB PI kW	20.0°CWB TC kW	20.0°CWB PI kW	22.0°CWB TC kW	22.0°CWB PI kW	24.0°CWB TC kW	24.0°CWB PI kW
130 (1625)	10	121	20.8	144	25.5	168	30.3	174	30.9	176	30.3	180	29.0	185	27.7
	12	121	21.2	144	26.0	168	30.9	172	30.8	174	30.1	178	28.8	182	28.4
	14	121	21.6	144	26.5	167	31.3	169	30.6	172	30.0	176	29.7	180	30.0
	16	121	22.0	144	27.0	165	31.1	167	30.9	169	31.0	174	31.3	178	31.6
	18	121	22.4	144	27.5	163	32.3	165	32.5	167	32.6	171	32.9	176	33.3
	20	121	22.9	144	29.3	160	33.9	163	34.0	165	34.2	169	34.6	173	34.9
	21	121	23.5	144	30.4	159	34.7	161	34.8	164	35.0	168	35.4	172	35.7
	23	121	25.2	144	32.5	157	36.2	159	36.4	161	36.6	166	37.0	170	37.4
	25	121	26.9	144	34.8	155	37.8	157	38.0	159	38.2	164	38.6	168	39.0
	27	121	28.8	144	37.3	153	39.4	155	39.6	157	39.8	161	40.3	166	40.7
	29	121	30.7	144	39.8	150	41.0	152	41.2	155	41.5	159	41.9	163	42.3
	31	121	32.8	144	42.2	148	42.6	150	42.9	152	43.1	157	43.6	161	44.0
	33	121	34.9	141	43.7	146	44.2	148	44.5	150	44.7	155	45.2	159	45.7
	35	121	37.2	139	45.3	144	45.9	146	46.1	148	46.4	152	46.9	157	47.4
	37	121	39.6	137	46.9	141	47.5	144	47.8	146	48.0	150	48.6	154	49.1
	39	121	42.2	135	48.5	139	49.1	141	49.4	143	49.7	148	50.3	152	50.9
120 (1500)	10	112	19.0	133	23.2	155	27.6	166	29.9	173	31.1	177	29.9	181	28.8
	12	112	19.4	133	23.7	155	28.1	166	30.4	171	30.9	175	29.8	179	28.6
	14	112	19.7	133	24.1	155	28.7	166	31.0	169	30.8	173	29.6	177	29.8
	16	112	20.1	133	24.6	155	29.2	164	31.2	167	30.8	171	31.1	175	31.4
	18	112	20.5	133	25.1	155	30.2	162	32.3	164	32.4	168	32.7	172	33.0
	20	112	20.9	133	26.1	155	32.5	160	33.8	162	34.0	166	34.3	170	34.6
	21	112	21.1	133	27.0	155	33.7	159	34.6	161	34.8	165	35.1	169	35.4
	23	112	22.5	133	28.9	155	36.0	157	36.2	159	36.4	163	36.7	167	37.1
	25	112	24.1	133	31.0	152	37.6	154	37.8	156	38.0	160	38.3	164	38.7
	27	112	25.7	133	33.1	150	39.2	152	39.4	154	39.6	158	40.0	162	40.3
	29	112	27.4	133	35.3	148	40.8	150	41.0	152	41.2	156	41.6	160	42.0
	31	112	29.2	133	37.7	146	42.4	148	42.6	150	42.8	154	43.2	158	43.7
	33	112	31.1	133	40.2	143	44.0	145	44.2	147	44.4	151	44.9	155	45.3
	35	112	33.1	133	42.9	141	45.6	143	45.8	145	46.1	149	46.5	153	47.0
	37	112	35.3	133	45.7	139	47.2	141	47.4	143	47.7	147	48.2	151	48.7
	39	112	37.5	133	48.3	137	48.8	139	49.1	141	49.3	145	49.9	149	50.4
110 (1375)	10	102	17.3	122	21.0	142	25.0	152	27.0	162	29.0	174	30.8	178	29.8
	12	102	17.6	122	21.4	142	25.4	152	27.5	162	29.6	172	30.7	176	29.6
	14	102	17.9	122	21.8	142	25.9	152	28.0	162	30.2	170	30.5	173	29.6
	16	102	18.2	122	22.2	142	26.4	152	28.6	162	30.7	167	30.9	171	31.2
	18	102	18.6	122	22.7	142	27.0	152	29.4	162	32.2	165	32.5	169	32.8
	20	102	18.9	122	23.1	142	28.6	152	31.6	159	33.8	163	34.1	167	34.4
	21	102	19.1	122	23.8	142	29.6	152	32.7	158	34.6	162	34.9	166	35.2
	23	102	20.0	122	25.5	142	31.7	152	35.1	156	36.2	160	36.5	163	36.8
	25	102	21.4	122	27.3	142	34.0	152	37.6	154	37.7	157	38.1	161	38.4
	27	102	22.8	122	29.2	142	36.3	150	39.1	151	39.3	155	39.7	159	40.0
	29	102	24.3	122	31.1	142	38.8	147	40.7	149	40.9	153	41.3	157	41.7
	31	102	25.9	122	33.2	142	41.4	145	42.3	147	42.5	151	42.9	154	43.3
	33	102	27.6	122	35.4	141	43.7	143	43.9	145	44.1	148	44.5	152	44.9
	35	102	29.3	122	37.7	139	45.3	141	45.5	142	45.7	146	46.2	150	46.6
	37	102	31.2	122	40.1	136	46.9	138	47.1	140	47.3	144	47.8	148	48.3
	39	102	33.1	122	42.7	134	48.5	136	48.7	138	49.0	142	49.5	145	50.0
100 (1250)	10	93.1	15.6	111	18.9	129	22.4	138	24.2	147	26.0	165	29.7	174	30.8
	12	93.1	15.8	111	19.2	129	22.8	138	24.6	147	26.5	165	30.3	172	30.6
	14	93.1	16.1	111	19.6	129	23.2	138	25.1	147	27.0	165	30.9	170	30.4
	16	93.1	16.4	111	20.0	129	23.7	138	25.6	147	27.5	164	31.3	168	30.9
	18	93.1	16.7	111	20.3	129	24.1	138	26.1	147	28.1	162	32.3	165	32.5
	20	93.1	17.0	111	20.7	129	24.9	138	27.4	147	30.1	160	33.8	163	34.1
	21	93.1	17.2	111	21.0	129	25.8	138	28.4	147	31.2	159	34.6	162	34.9
	23	93.1	17.7	111	22.3	129	27.6	138	30.4	147	33.4	157	36.2	160	36.5
	25	93.1	18.8	111	23.9	129	29.5	138	32.6	147	35.8	154	37.8	158	38.1
	27	93.1	20.1	111	25.5	129	31.5	138	34.8	147	38.3	152	39.4	155	39.7
	29	93.1	21.4	111	27.2	129	33.7	138	37.2	146	40.6	150	41.0	153	41.3
	31	93.1	22.8	111	29.0	129	35.9	138	39.7	144	42.2	148	42.6	151	42.9
	33	93.1	24.2	111	30.9	129	38.3	138	42.4	142	43.8	145	44.2	149	44.6
	35	93.1	25.7	111	32.8	129	40.9	138	45.2	140	45.4	143	45.8	146	46.2
	37	93.1	27.3	111	35.0	129	43.5	136	46.8	137	47.0	141	47.4	144	47.8
	39	93.1	29.0	111	37.2	129	46.4	134	48.4	135	48.6	139	49.1	142	49.5

Cooling capacity

Combination(%) (Capacity index)	Outdoor air temp. °CDB	Indoor air temp. 14.0°CWB TC kW	14.0°CWB PI kW	16.0°CWB TC kW	16.0°CWB PI kW	18.0°CWB TC kW	18.0°CWB PI kW	19.0°CWB TC kW	19.0°CWB PI kW	20.0°CWB TC kW	20.0°CWB PI kW	22.0°CWB TC kW	22.0°CWB PI kW	24.0°CWB TC kW	24.0°CWB PI kW
90 (1125)	10	83.8	13.9	100.0	16.8	116	19.9	124	21.4	132	23.0	148	26.3	165	29.6
	12	83.8	14.2	100.0	17.1	116	20.2	124	21.8	132	23.5	148	26.8	165	30.2
	14	83.8	14.4	100.0	17.4	116	20.6	124	22.2	132	23.9	148	27.3	165	30.8
	16	83.8	14.7	100.0	17.7	116	21.0	124	22.7	132	24.4	148	27.8	164	31.3
	18	83.8	14.9	100.0	18.1	116	21.4	124	23.1	132	24.8	148	28.4	162	32.3
	20	83.8	15.2	100.0	18.4	116	21.8	124	23.6	132	25.8	148	30.5	160	33.8
	21	83.8	15.4	100.0	18.6	116	22.2	124	24.4	132	26.7	148	31.6	159	34.6
	23	83.8	15.7	100.0	19.4	116	23.8	124	26.1	132	28.6	148	33.9	156	36.2
	25	83.8	16.5	100.0	20.7	116	25.4	124	27.9	132	30.6	148	36.3	154	37.8
	27	83.8	17.6	100.0	22.1	116	27.1	124	29.9	132	32.7	148	38.8	152	39.4
	29	83.8	18.7	100.0	23.5	116	28.9	124	31.9	132	34.9	147	40.7	150	41.0
	31	83.8	19.8	100.0	25.0	116	30.9	124	34.0	132	37.3	144	42.2	147	42.6
	33	83.8	21.1	100.0	26.6	116	32.9	124	36.2	132	39.8	142	43.8	145	44.2
	35	83.8	22.4	100.0	28.3	116	35.0	124	38.6	132	42.4	140	45.4	143	45.8
	37	83.8	23.8	100.0	30.1	116	37.3	124	41.1	132	45.2	138	47.0	141	47.4
	39	83.8	25.2	100.0	32.0	116	39.7	124	43.8	132	48.1	135	48.6	138	49.0
80 (1000)	10	74.5	12.4	88.9	14.8	103	17.4	110	18.8	118	20.1	132	23.0	146	25.9
	12	74.5	12.6	88.9	15.1	103	17.7	110	19.1	118	20.5	132	23.4	146	26.4
	14	74.5	12.8	88.9	15.3	103	18.0	110	19.5	118	20.9	132	23.8	146	26.9
	16	74.5	13.0	88.9	15.6	103	18.4	110	19.8	118	21.3	132	24.3	146	27.4
	18	74.5	13.2	88.9	15.9	103	18.7	110	20.2	118	21.7	132	24.8	146	27.9
	20	74.5	13.5	88.9	16.2	103	19.1	110	20.6	118	22.1	132	25.7	146	29.9
	21	74.5	13.6	88.9	16.4	103	19.3	110	20.8	118	22.6	132	26.6	146	30.9
	23	74.5	13.8	88.9	16.7	103	20.2	110	22.2	118	24.2	132	28.5	146	33.2
	25	74.5	14.3	88.9	17.7	103	21.6	110	23.7	118	25.8	132	30.5	146	35.5
	27	74.5	15.2	88.9	18.9	103	23.0	110	25.3	118	27.6	132	32.6	146	38.0
	29	74.5	16.1	88.9	20.1	103	24.6	110	27.0	118	29.5	132	34.8	146	40.6
	31	74.5	17.1	88.9	21.4	103	26.2	110	28.7	118	31.4	132	37.2	144	42.2
	33	74.5	18.2	88.9	22.7	103	27.8	110	30.6	118	33.5	132	39.6	142	43.8
	35	74.5	19.3	88.9	24.2	103	29.6	110	32.6	118	35.6	132	42.2	140	45.4
	37	74.5	20.4	88.9	25.7	103	31.5	110	34.6	118	37.9	132	45.0	137	47.0
	39	74.5	21.7	88.9	27.2	103	33.5	110	36.9	118	40.4	132	48.0	135	48.6
70 (875)	10	65.2	10.9	77.8	12.9	90.3	15.1	96.6	16.2	103	17.3	115	19.7	128	22.2
	12	65.2	11.0	77.8	13.1	90.3	15.3	96.6	16.5	103	17.7	115	20.1	128	22.6
	14	65.2	11.2	77.8	13.3	90.3	15.6	96.6	16.8	103	18.0	115	20.5	128	23.0
	16	65.2	11.4	77.8	13.6	90.3	15.9	96.6	17.1	103	18.3	115	20.8	128	23.5
	18	65.2	11.6	77.8	13.8	90.3	16.2	96.6	17.4	103	18.7	115	21.3	128	23.9
	20	65.2	11.8	77.8	14.1	90.3	16.5	96.6	17.7	103	19.0	115	21.7	128	24.6
	21	65.2	11.9	77.8	14.2	90.3	16.6	96.6	17.9	103	19.2	115	22.0	128	25.5
	23	65.2	12.1	77.8	14.5	90.3	17.0	96.6	18.5	103	20.1	115	23.6	128	27.3
	25	65.2	12.3	77.8	15.0	90.3	18.1	96.6	19.8	103	21.5	115	25.2	128	29.2
	27	65.2	13.0	77.8	16.0	90.3	19.3	96.6	21.1	103	22.9	115	26.9	128	31.2
	29	65.2	13.8	77.8	17.0	90.3	20.6	96.6	22.5	103	24.4	115	28.7	128	33.3
	31	65.2	14.6	77.8	18.1	90.3	21.9	96.6	23.9	103	26.0	115	30.6	128	35.5
	33	65.2	15.5	77.8	19.2	90.3	23.2	96.6	25.4	103	27.7	115	32.6	128	37.9
	35	65.2	16.4	77.8	20.3	90.3	24.7	96.6	27.0	103	29.5	115	34.7	128	40.4
	37	65.2	17.4	77.8	21.6	90.3	26.2	96.6	28.7	103	31.4	115	36.9	128	43.0
	39	65.2	18.4	77.8	22.9	90.3	27.8	96.6	30.5	103	33.3	115	39.3	128	45.8
60 (750)	10	55.9	9.5	66.6	11.1	77.4	12.9	82.8	13.8	88.2	14.7	99.0	16.6	110	18.6
	12	55.9	9.6	66.6	11.3	77.4	13.1	82.8	14.0	88.2	15.0	99.0	16.9	110	19.0
	14	55.9	9.7	66.6	11.5	77.4	13.3	82.8	14.2	88.2	15.2	99.0	17.2	110	19.3
	16	55.9	9.9	66.6	11.6	77.4	13.5	82.8	14.5	88.2	15.5	99.0	17.5	110	19.7
	18	55.9	10.0	66.6	11.8	77.4	13.8	82.8	14.7	88.2	15.8	99.0	17.9	110	20.1
	20	55.9	10.2	66.6	12.0	77.4	14.0	82.8	15.0	88.2	16.1	99.0	18.2	110	20.5
	21	55.9	10.3	66.6	12.1	77.4	14.1	82.8	15.2	88.2	16.2	99.0	18.4	110	20.7
	23	55.9	10.4	66.6	12.4	77.4	14.4	82.8	15.4	88.2	16.5	99.0	19.1	110	22.0
	25	55.9	10.6	66.6	12.6	77.4	15.0	82.8	16.2	88.2	17.6	99.0	20.4	110	23.5
	27	55.9	11.0	66.6	13.3	77.4	15.9	82.8	17.3	88.2	18.7	99.0	21.8	110	25.1
	29	55.9	11.7	66.6	14.2	77.4	16.9	82.8	18.4	88.2	19.9	99.0	23.2	110	26.7
	31	55.9	12.3	66.6	15.0	77.4	18.0	82.8	19.5	88.2	21.2	99.0	24.7	110	28.5
	33	55.9	13.1	66.6	15.9	77.4	19.1	82.8	20.8	88.2	22.5	99.0	26.3	110	30.3
	35	55.9	13.8	66.6	16.9	77.4	20.2	82.8	22.0	88.2	23.9	99.0	27.9	110	32.3
	37	55.9	14.6	66.6	17.9	77.4	21.5	82.8	23.4	88.2	25.4	99.0	29.7	110	34.3
	39	55.9	15.4	66.6	18.9	77.4	22.7	82.8	24.8	88.2	27.0	99.0	31.6	110	36.5
50 (625)	10	46.6	8.14	55.5	9.4	64.5	10.8	69.0	11.5	73.5	12.2	82.5	13.7	91.4	15.3
	12	46.6	8.24	55.5	9.5	64.5	10.9	69.0	11.7	73.5	12.4	82.5	13.9	91.4	15.5
	14	46.6	8.35	55.5	9.7	64.5	11.1	69.0	11.8	73.5	12.6	82.5	14.2	91.4	15.8
	16	46.6	8.46	55.5	9.8	64.5	11.3	69.0	12.0	73.5	12.8	82.5	14.4	91.4	16.1
	18	46.6	8.58	55.5	10.0	64.5	11.5	69.0	12.2	73.5	13.0	82.5	14.7	91.4	16.4
	20	46.6	8.70	55.5	10.1	64.5	11.7	69.0	12.5	73.5	13.3	82.5	15.0	91.4	16.7
	21	46.6	8.77	55.5	10.2	64.5	11.8	69.0	12.6	73.5	13.4	82.5	15.1	91.4	16.9
	23	46.6	8.90	55.5	10.4	64.5	12.0	69.0	12.8	73.5	13.6	82.5	15.4	91.4	17.3
	25	46.6	9.03	55.5	10.6	64.5	12.2	69.0	13.1	73.5	14.0	82.5	16.2	91.4	18.4
	27	46.6	9.18	55.5	10.9	64.5	12.9	69.0	13.9	73.5	14.9	82.5	17.2	91.4	19.6
	29	46.6	9.7	55.5	11.6	64.5	13.6	69.0	14.7	73.5	15.9	82.5	18.3	91.4	20.9
	31	46.6	10.3	55.5	12.3	64.5	14.5	69.0	15.6	73.5	16.9	82.5	19.4	91.4	22.2
	33	46.6	10.8	55.5	13.0	64.5	15.3	69.0	16.6	73.5	17.9	82.5	20.6	91.4	23.6
	35	46.6	11.4	55.5	13.7	64.5	16.2	69.0	17.6	73.5	19.0	82.5	21.9	91.4	25.1
	37	46.6	12.1	55.5	14.5	64.5	17.2	69.0	18.6	73.5	20.1	82.5	23.3	91.4	26.7
	39	46.6	12.7	55.5	15.3	64.5	18.2	69.0	19.7	73.5	21.3	82.5	24.7	91.4	28.3

TC Total capacity ; kW
PI Power Input ; kW(Comp.+Outdoor fan motor)
Note1: The above table shows the average value of conditions which may occur.

RXQ52PY1 [50Hz]

Cooling capacity

Combination(%) (Capacity index)	Outdoor air temp. °CDB	Indoor air temp. 14.0°CWB TC kW	14.0°CWB PI kW	16.0°CWB TC kW	16.0°CWB PI kW	18.0°CWB TC kW	18.0°CWB PI kW	19.0°CWB TC kW	19.0°CWB PI kW	20.0°CWB TC kW	20.0°CWB PI kW	22.0°CWB TC kW	22.0°CWB PI kW	24.0°CWB TC kW	24.0°CWB PI kW
130 (1690)	10	125	21.6	150	26.5	174	31.5	180	32.2	182	31.5	187	30.2	191	28.8
	12	125	22.0	150	27.0	174	32.1	178	32.0	180	31.3	185	30.0	189	29.5
	14	125	22.5	150	27.5	173	32.5	175	31.8	178	31.2	182	30.9	187	31.2
	16	125	22.9	150	28.0	171	32.3	173	32.1	175	32.3	180	32.6	184	32.9
	18	125	23.3	150	28.6	169	33.6	171	33.8	173	33.9	178	34.3	182	34.6
	20	125	23.8	150	30.5	166	35.2	168	35.4	171	35.6	175	35.9	180	36.3
	21	125	24.5	150	31.6	165	36.0	167	36.2	170	36.4	174	36.8	179	37.1
	23	125	26.2	150	33.8	163	37.7	165	37.9	167	38.1	172	38.5	176	38.8
	25	125	28.0	150	36.2	160	39.3	163	39.5	165	39.7	169	40.2	174	40.6
	27	125	29.9	150	38.8	158	41.0	160	41.2	163	41.4	167	41.9	172	42.3
	29	125	31.9	150	41.4	156	42.7	158	42.9	160	43.1	165	43.6	169	44.0
	31	125	34.1	149	43.8	153	44.3	156	44.6	158	44.8	162	45.3	167	45.8
	33	125	36.3	147	45.5	151	46.0	153	46.3	156	46.5	160	47.0	165	47.5
	35	125	38.7	144	47.1	149	47.7	151	48.0	153	48.2	158	48.8	162	49.3
	37	125	41.2	142	48.8	146	49.4	149	49.7	151	50.0	155	50.5	160	51.1
	39	125	43.8	140	50.5	144	51.1	146	51.4	149	51.7	153	52.3	158	52.9
120 (1560)	10	116	19.8	138	24.2	160	28.7	172	31.0	180	32.3	184	31.1	188	29.9
	12	116	20.1	138	24.6	160	29.3	172	31.6	177	32.2	181	30.9	186	29.7
	14	116	20.5	138	25.1	160	29.8	172	32.2	175	32.0	179	30.8	183	31.0
	16	116	20.9	138	25.6	160	30.4	170	32.5	173	32.1	177	32.4	181	32.6
	18	116	21.3	138	26.1	160	31.4	168	33.6	170	33.7	174	34.0	179	34.3
	20	116	21.7	138	27.1	160	33.8	166	35.2	168	35.4	172	35.7	176	36.0
	21	116	21.9	138	28.1	160	35.0	165	36.0	167	36.2	171	36.5	175	36.8
	23	116	23.4	138	30.1	160	37.5	162	37.7	164	37.8	169	38.2	173	38.5
	25	116	25.0	138	32.2	158	39.1	160	39.3	162	39.5	166	39.9	170	40.2
	27	116	26.7	138	34.4	156	40.8	158	41.0	160	41.2	164	41.6	168	42.0
	29	116	28.5	138	36.7	153	42.4	155	42.6	157	42.8	162	43.2	166	43.7
	31	116	30.4	138	39.2	151	44.1	153	44.3	155	44.5	159	45.0	163	45.4
	33	116	32.4	138	41.8	149	45.7	151	46.0	153	46.2	157	46.7	161	47.1
	35	116	34.5	138	44.6	146	47.4	148	47.6	150	47.9	155	48.4	159	48.9
	37	116	36.7	138	47.5	144	49.1	146	49.3	148	49.6	152	50.1	156	50.6
	39	116	39.0	137	50.2	142	50.8	144	51.0	146	51.3	150	51.9	154	52.4
110 (1430)	10	106	18.0	127	21.9	147	26.0	157	28.1	168	30.2	180	32.1	184	30.9
	12	106	18.3	127	22.3	147	26.5	157	28.6	168	30.8	178	31.9	182	30.8
	14	106	18.6	127	22.7	147	27.0	157	29.1	168	31.4	176	31.7	180	30.8
	16	106	19.0	127	23.1	147	27.5	157	29.7	168	32.0	174	32.1	177	32.4
	18	106	19.3	127	23.6	147	28.0	157	30.5	167	33.5	171	33.8	175	34.1
	20	106	19.7	127	24.1	147	29.7	157	32.8	165	35.1	169	35.4	173	35.7
	21	106	19.9	127	24.8	147	30.8	157	34.0	164	36.0	168	36.3	172	36.6
	23	106	20.8	127	26.5	147	33.0	157	36.5	162	37.6	165	37.9	169	38.2
	25	106	22.2	127	28.4	147	35.3	157	39.1	159	39.2	163	39.6	167	39.9
	27	106	23.7	127	30.3	147	37.8	155	40.7	157	40.9	161	41.2	165	41.6
	29	106	25.3	127	32.4	147	40.4	153	42.3	155	42.5	158	42.9	162	43.3
	31	106	26.9	127	34.5	147	43.1	150	44.0	152	44.2	156	44.6	160	45.0
	33	106	28.7	127	36.8	146	45.4	148	45.7	150	45.9	154	46.3	158	46.7
	35	106	30.5	127	39.2	144	47.1	146	47.3	148	47.5	151	48.0	155	48.5
	37	106	32.4	127	41.7	141	48.8	143	49.0	145	49.2	149	49.7	153	50.2
	39	106	34.4	127	44.4	139	50.4	141	50.7	143	50.9	147	51.4	151	51.9
100 (1300)	10	96.5	16.2	115	19.6	134	23.3	143	25.1	152	27.0	171	30.9	181	32.0
	12	96.5	16.5	115	20.0	134	23.7	143	25.6	152	27.5	171	31.5	178	31.8
	14	96.5	16.8	115	20.4	134	24.2	143	26.1	152	28.1	171	32.1	176	31.6
	16	96.5	17.1	115	20.8	134	24.6	143	26.6	152	28.6	170	32.5	174	32.2
	18	96.5	17.4	115	21.2	134	25.1	143	27.1	152	29.2	168	33.6	171	33.8
	20	96.5	17.7	115	21.6	134	25.9	143	28.5	152	31.3	166	35.2	169	35.5
	21	96.5	17.9	115	21.8	134	26.8	143	29.5	152	32.4	165	36.0	168	36.3
	23	96.5	18.4	115	23.2	134	28.7	143	31.6	152	34.7	162	37.6	166	37.9
	25	96.5	19.6	115	24.8	134	30.7	143	33.9	152	37.2	160	39.3	163	39.6
	27	96.5	20.9	115	26.5	134	32.8	143	36.2	152	39.8	158	40.9	161	41.3
	29	96.5	22.2	115	28.3	134	35.0	143	38.7	152	42.3	155	42.6	159	43.0
	31	96.5	23.7	115	30.1	134	37.4	143	41.3	149	43.9	153	44.3	156	44.6
	33	96.5	25.2	115	32.1	134	39.9	143	44.1	147	45.5	151	45.9	154	46.3
	35	96.5	26.8	115	34.2	134	42.5	143	47.0	145	47.2	148	47.6	152	48.0
	37	96.5	28.4	115	36.3	134	45.3	141	48.7	142	48.9	146	49.3	149	49.8
	39	96.5	30.2	115	38.7	134	48.2	138	50.3	140	50.5	144	51.0	147	51.5

Cooling capacity

Combination(%) (Capacity index)	Outdoor air temp. °CDB	Indoor air temp. 14.0°CWB TC kW	14.0°CWB PI kW	16.0°CWB TC kW	16.0°CWB PI kW	18.0°CWB TC kW	18.0°CWB PI kW	19.0°CWB TC kW	19.0°CWB PI kW	20.0°CWB TC kW	20.0°CWB PI kW	22.0°CWB TC kW	22.0°CWB PI kW	24.0°CWB TC kW	24.0°CWB PI kW
90 (1170)	10	86.9	14.5	103.6	17.5	120	20.6	129	22.3	137	23.9	154	27.3	171	30.8
	12	86.9	14.7	103.6	17.8	120	21.0	129	22.7	137	24.4	154	27.9	171	31.4
	14	86.9	15.0	103.6	18.1	120	21.4	129	23.1	137	24.9	154	28.4	171	32.0
	16	86.9	15.3	103.6	18.5	120	21.8	129	23.6	137	25.3	154	29.0	170	32.5
	18	86.9	15.5	103.6	18.8	120	22.2	129	24.0	137	25.8	154	29.5	168	33.5
	20	86.9	15.8	103.6	19.2	120	22.7	129	24.5	137	26.8	154	31.7	166	35.2
	21	86.9	16.0	103.6	19.4	120	23.1	129	25.4	137	27.8	154	32.9	164	36.0
	23	86.9	16.3	103.6	20.2	120	24.7	129	27.2	137	29.7	154	35.3	162	37.6
	25	86.9	17.1	103.6	21.5	120	26.4	129	29.1	137	31.8	154	37.8	160	39.3
	27	86.9	18.2	103.6	22.9	120	28.2	129	31.0	137	34.0	154	40.4	157	40.9
	29	86.9	19.4	103.6	24.5	120	30.1	129	33.1	137	36.3	152	42.3	155	42.6
	31	86.9	20.6	103.6	26.0	120	32.1	129	35.3	137	38.8	150	43.9	153	44.3
	33	86.9	21.9	103.6	27.7	120	34.2	129	37.7	137	41.4	147	45.6	150	45.9
	35	86.9	23.3	103.6	29.5	120	36.4	129	40.2	137	44.1	145	47.2	148	47.6
	37	86.9	24.7	103.6	31.3	120	38.7	129	42.8	137	47.0	143	48.9	146	49.3
	39	86.9	26.2	103.6	33.3	120	41.2	129	45.5	137	50.1	140	50.6	144	51.0
80 (1040)	10	77.2	12.9	92.1	15.4	107	18.1	114	19.5	122	20.9	137	23.9	152	26.9
	12	77.2	13.1	92.1	15.7	107	18.4	114	19.9	122	21.3	137	24.3	152	27.4
	14	77.2	13.3	92.1	15.9	107	18.8	114	20.2	122	21.7	137	24.8	152	27.9
	16	77.2	13.5	92.1	16.2	107	19.1	114	20.6	122	22.1	137	25.3	152	28.5
	18	77.2	13.8	92.1	16.5	107	19.5	114	21.0	122	22.6	137	25.8	152	29.0
	20	77.2	14.0	92.1	16.8	107	19.9	114	21.4	122	23.0	137	26.7	152	31.1
	21	77.2	14.1	92.1	17.0	107	20.1	114	21.6	122	23.5	137	27.7	152	32.2
	23	77.2	14.4	92.1	17.3	107	21.0	114	23.0	122	25.1	137	29.6	152	34.5
	25	77.2	14.8	92.1	18.4	107	22.5	114	24.6	122	26.9	137	31.7	152	36.9
	27	77.2	15.8	92.1	19.7	107	24.0	114	26.3	122	28.7	137	33.9	152	39.5
	29	77.2	16.8	92.1	20.9	107	25.5	114	28.0	122	30.6	137	36.2	152	42.2
	31	77.2	17.8	92.1	22.3	107	27.2	114	29.9	122	32.7	137	38.6	149	43.9
	33	77.2	18.9	92.1	23.7	107	29.0	114	31.8	122	34.8	137	41.2	147	45.5
	35	77.2	20.1	92.1	25.1	107	30.8	114	33.9	122	37.1	137	43.9	145	47.2
	37	77.2	21.3	92.1	26.7	107	32.8	114	36.0	122	39.5	137	46.8	142	48.9
	39	77.2	22.5	92.1	28.3	107	34.8	114	38.3	122	42.0	137	49.9	140	50.5
70 (910)	10	67.6	11.3	80.6	13.4	93.6	15.7	100.1	16.8	107	18.0	120	20.5	133	23.1
	12	67.6	11.5	80.6	13.6	93.6	15.9	100.1	17.1	107	18.4	120	20.9	133	23.5
	14	67.6	11.7	80.6	13.9	93.6	16.2	100.1	17.4	107	18.7	120	21.3	133	23.9
	16	67.6	11.9	80.6	14.1	93.6	16.5	100.1	17.8	107	19.0	120	21.7	133	24.4
	18	67.6	12.0	80.6	14.4	93.6	16.8	100.1	18.1	107	19.4	120	22.1	133	24.9
	20	67.6	12.3	80.6	14.6	93.6	17.1	100.1	18.5	107	19.8	120	22.5	133	25.6
	21	67.6	12.4	80.6	14.8	93.6	17.3	100.1	18.6	107	20.0	120	22.9	133	26.5
	23	67.6	12.6	80.6	15.0	93.6	17.7	100.1	19.3	107	20.9	120	24.5	133	28.4
	25	67.6	12.8	80.6	15.6	93.6	18.8	100.1	20.6	107	22.4	120	26.2	133	30.3
	27	67.6	13.5	80.6	16.6	93.6	20.1	100.1	21.9	107	23.9	120	28.0	133	32.4
	29	67.6	14.4	80.6	17.7	93.6	21.4	100.1	23.4	107	25.4	120	29.8	133	34.6
	31	67.6	15.2	80.6	18.8	93.6	22.7	100.1	24.9	107	27.1	120	31.8	133	36.9
	33	67.6	16.1	80.6	19.9	93.6	24.2	100.1	26.4	107	28.8	120	33.9	133	39.4
	35	67.6	17.1	80.6	21.2	93.6	25.7	100.1	28.1	107	30.7	120	36.1	133	42.0
	37	67.6	18.1	80.6	22.4	93.6	27.3	100.1	29.9	107	32.6	120	38.4	133	44.7
	39	67.6	19.1	80.6	23.8	93.6	29.0	100.1	31.7	107	34.7	120	40.9	133	47.6
60 (780)	10	57.9	9.8	69.1	11.6	80.2	13.4	85.8	14.3	91.4	15.3	102.5	17.3	114	19.4
	12	57.9	10.0	69.1	11.7	80.2	13.6	85.8	14.6	91.4	15.5	102.5	17.6	114	19.7
	14	57.9	10.1	69.1	11.9	80.2	13.8	85.8	14.8	91.4	15.8	102.5	17.9	114	20.1
	16	57.9	10.3	69.1	12.1	80.2	14.1	85.8	15.1	91.4	16.1	102.5	18.2	114	20.5
	18	57.9	10.4	69.1	12.3	80.2	14.3	85.8	15.3	91.4	16.4	102.5	18.6	114	20.9
	20	57.9	10.6	69.1	12.5	80.2	14.6	85.8	15.6	91.4	16.7	102.5	18.9	114	21.3
	21	57.9	10.7	69.1	12.6	80.2	14.7	85.8	15.8	91.4	16.9	102.5	19.1	114	21.5
	23	57.9	10.9	69.1	12.8	80.2	15.0	85.8	16.1	91.4	17.2	102.5	19.9	114	22.8
	25	57.9	11.0	69.1	13.1	80.2	15.5	85.8	16.9	91.4	18.3	102.5	21.2	114	24.4
	27	57.9	11.4	69.1	13.9	80.2	16.5	85.8	18.0	91.4	19.5	102.5	22.6	114	26.1
	29	57.9	12.1	69.1	14.7	80.2	17.6	85.8	19.1	91.4	20.7	102.5	24.1	114	27.8
	31	57.9	12.8	69.1	15.6	80.2	18.7	85.8	20.3	91.4	22.0	102.5	25.7	114	29.6
	33	57.9	13.6	69.1	16.5	80.2	19.8	85.8	21.6	91.4	23.4	102.5	27.3	114	31.5
	35	57.9	14.4	69.1	17.5	80.2	21.0	85.8	22.9	91.4	24.9	102.5	29.1	114	33.6
	37	57.9	15.2	69.1	18.6	80.2	22.3	85.8	24.3	91.4	26.4	102.5	30.9	114	35.7
	39	57.9	16.0	69.1	19.6	80.2	23.6	85.8	25.8	91.4	28.0	102.5	32.8	114	38.0
50 (650)	10	48.3	8.46	57.6	9.8	66.9	11.2	71.5	11.9	76.1	12.7	85.4	14.3	94.7	15.9
	12	48.3	8.57	57.6	9.9	66.9	11.4	71.5	12.1	76.1	12.9	85.4	14.5	94.7	16.2
	14	48.3	8.68	57.6	10.1	66.9	11.6	71.5	12.3	76.1	13.1	85.4	14.7	94.7	16.4
	16	48.3	8.80	57.6	10.2	66.9	11.7	71.5	12.5	76.1	13.3	85.4	15.0	94.7	16.7
	18	48.3	8.92	57.6	10.4	66.9	11.9	71.5	12.7	76.1	13.6	85.4	15.3	94.7	17.0
	20	48.3	9.05	57.6	10.5	66.9	12.1	71.5	13.0	76.1	13.8	85.4	15.5	94.7	17.4
	21	48.3	9.12	57.6	10.6	66.9	12.2	71.5	13.1	76.1	13.9	85.4	15.7	94.7	17.5
	23	48.3	9.25	57.6	10.8	66.9	12.4	71.5	13.3	76.1	14.2	85.4	16.0	94.7	17.9
	25	48.3	9.39	57.6	11.0	66.9	12.7	71.5	13.6	76.1	14.6	85.4	16.8	94.7	19.1
	27	48.3	9.55	57.6	11.4	66.9	13.4	71.5	14.4	76.1	15.5	85.4	17.9	94.7	20.4
	29	48.3	10.1	57.6	12.0	66.9	14.2	71.5	15.3	76.1	16.5	85.4	19.0	94.7	21.7
	31	48.3	10.7	57.6	12.8	66.9	15.0	71.5	16.3	76.1	17.5	85.4	20.2	94.7	23.1
	33	48.3	11.3	57.6	13.5	66.9	15.9	71.5	17.2	76.1	18.6	85.4	21.5	94.7	24.6
	35	48.3	11.9	57.6	14.3	66.9	16.9	71.5	18.3	76.1	19.7	85.4	22.8	94.7	26.1
	37	48.3	12.5	57.6	15.1	66.9	17.9	71.5	19.3	76.1	20.9	85.4	24.2	94.7	27.7
	39	48.3	13.2	57.6	15.9	66.9	18.9	71.5	20.5	76.1	22.1	85.4	25.7	94.7	29.4

TC Total capacity ; kW
PI Power Input ; kW(Comp.+Outdoor fan motor)
Note1: The above table shows the average value of conditions which may occur.

RXQ54PY1 [50Hz]

Cooling capacity

Combination(%) (Capacity index)	Outdoor air temp. °CDB	Indoor air temp. 14.0°CWB TC kW	14.0°CWB PI kW	16.0°CWB TC kW	16.0°CWB PI kW	18.0°CWB TC kW	18.0°CWB PI kW	19.0°CWB TC kW	19.0°CWB PI kW	20.0°CWB TC kW	20.0°CWB PI kW	22.0°CWB TC kW	22.0°CWB PI kW	24.0°CWB TC kW	24.0°CWB PI kW
130 (1755)	10	129	22.7	154	27.7	179	33.0	185	33.7	187	33.0	192	31.6	197	30.2
	12	129	23.1	154	28.3	179	33.6	183	33.5	185	32.8	190	31.4	194	30.9
	14	129	23.5	154	28.8	178	34.0	180	33.3	183	32.6	187	32.4	192	32.7
	16	129	24.0	154	29.4	176	33.9	178	33.6	180	33.8	185	34.1	190	34.4
	18	129	24.4	154	29.9	173	35.2	176	35.3	178	35.5	183	35.9	187	36.2
	20	129	24.9	154	31.9	171	36.9	173	37.1	176	37.2	180	37.6	185	38.0
	21	129	25.6	154	33.0	170	37.7	172	37.9	174	38.1	179	38.5	184	38.9
	23	129	27.4	154	35.4	167	39.5	170	39.7	172	39.9	177	40.3	181	40.7
	25	129	29.3	154	37.9	165	41.2	167	41.4	170	41.6	174	42.0	179	42.5
	27	129	31.3	154	40.6	162	42.9	165	43.1	167	43.4	172	43.8	176	44.3
	29	129	33.4	154	43.4	160	44.7	162	44.9	165	45.1	169	45.6	174	46.1
	31	129	35.7	153	45.9	158	46.4	160	46.7	162	46.9	167	47.4	172	47.9
	33	129	38.0	151	47.6	155	48.2	158	48.4	160	48.7	165	49.2	169	49.8
	35	129	40.5	148	49.4	153	49.9	155	50.2	158	50.5	162	51.1	167	51.6
	37	129	43.1	146	51.1	151	51.7	153	52.0	155	52.3	160	52.9	164	53.5
	39	129	45.9	143	52.8	148	53.5	150	53.8	153	54.1	157	54.7	162	55.4
120 (1620)	10	119	20.7	142	25.3	165	30.1	176	32.5	185	33.9	189	32.6	193	31.3
	12	119	21.1	142	25.8	165	30.6	176	33.1	182	33.7	186	32.4	191	31.1
	14	119	21.5	142	26.3	165	31.2	176	33.7	180	33.5	184	32.2	188	32.4
	16	119	21.9	142	26.8	165	31.8	175	34.0	177	33.6	182	33.9	186	34.2
	18	119	22.3	142	27.3	165	32.9	173	35.1	175	35.3	179	35.6	184	35.9
	20	119	22.7	142	28.4	165	35.4	170	36.8	173	37.0	177	37.4	181	37.7
	21	119	23.0	142	29.4	165	36.7	169	37.7	171	37.9	176	38.2	180	38.6
	23	119	24.5	142	31.5	165	39.2	167	39.4	169	39.6	173	40.0	178	40.3
	25	119	26.2	142	33.7	162	40.9	164	41.1	167	41.3	171	41.7	175	42.1
	27	119	28.0	142	36.0	160	42.7	162	42.9	164	43.1	169	43.5	173	43.9
	29	119	29.8	142	38.5	158	44.4	160	44.6	162	44.8	166	45.3	170	45.7
	31	119	31.8	142	41.1	155	46.1	157	46.4	159	46.6	164	47.1	168	47.5
	33	119	33.9	142	43.8	153	47.9	155	48.1	157	48.4	161	48.8	166	49.3
	35	119	36.1	142	46.7	150	49.6	153	49.9	155	50.1	159	50.7	163	51.2
	37	119	38.4	142	49.8	148	51.4	150	51.6	152	51.9	157	52.5	161	53.0
	39	119	40.8	141	52.5	146	53.1	148	53.4	150	53.7	154	54.3	158	54.9
110 (1485)	10	109	18.8	130	22.9	151	27.2	162	29.4	172	31.6	186	33.6	189	32.4
	12	109	19.1	130	23.3	151	27.7	162	29.9	172	32.2	183	33.4	187	32.2
	14	109	19.5	130	23.8	151	28.2	162	30.5	172	32.8	181	33.2	185	32.2
	16	109	19.8	130	24.2	151	28.8	162	31.1	172	33.5	178	33.6	182	33.9
	18	109	20.2	130	24.7	151	29.3	162	32.0	172	35.1	176	35.4	180	35.7
	20	109	20.6	130	25.2	151	31.1	162	34.4	170	36.8	174	37.1	178	37.4
	21	109	20.8	130	25.9	151	32.2	162	35.6	168	37.6	172	38.0	176	38.3
	23	109	21.8	130	27.8	151	34.5	162	38.2	166	39.4	170	39.7	174	40.0
	25	109	23.3	130	29.7	151	37.0	162	40.9	164	41.1	168	41.4	172	41.8
	27	109	24.8	130	31.7	151	39.5	159	42.6	161	42.8	165	43.2	169	43.6
	29	109	26.5	130	33.9	151	42.2	157	44.3	159	44.5	163	44.9	167	45.3
	31	109	28.2	130	36.1	151	45.1	155	46.1	157	46.3	160	46.7	164	47.1
	33	109	30.0	130	38.5	150	47.6	152	47.8	154	48.0	158	48.5	162	48.9
	35	109	31.9	130	41.0	148	49.3	150	49.5	152	49.8	156	50.3	160	50.7
	37	109	33.9	130	43.7	145	51.0	147	51.3	149	51.5	153	52.0	157	52.5
	39	109	36.1	130	46.5	143	52.8	145	53.0	147	53.3	151	53.8	155	54.4
100 (1350)	10	99.2	17.0	118	20.6	137	24.4	147	26.3	157	28.3	176	32.3	186	33.5
	12	99.2	17.2	118	20.9	137	24.8	147	26.8	157	28.8	176	33.0	183	33.3
	14	99.2	17.6	118	21.3	137	25.3	147	27.3	157	29.4	176	33.6	181	33.1
	16	99.2	17.9	118	21.7	137	25.8	147	27.9	157	30.0	175	34.0	179	33.7
	18	99.2	18.2	118	22.1	137	26.3	147	28.4	157	30.6	173	35.1	176	35.4
	20	99.2	18.6	118	22.6	137	27.1	147	29.8	157	32.7	170	36.8	174	37.1
	21	99.2	18.7	118	22.8	137	28.0	147	30.9	157	33.9	169	37.7	173	38.0
	23	99.2	19.2	118	24.3	137	30.0	147	33.1	157	36.4	167	39.4	170	39.7
	25	99.2	20.5	118	26.0	137	32.1	147	35.5	157	38.9	164	41.1	168	41.5
	27	99.2	21.9	118	27.7	137	34.3	147	37.9	157	41.7	162	42.9	166	43.2
	29	99.2	23.3	118	29.6	137	36.7	147	40.5	156	44.2	160	44.6	163	45.0
	31	99.2	24.8	118	31.5	137	39.1	147	43.2	154	46.0	157	46.3	161	46.7
	33	99.2	26.3	118	33.6	137	41.7	147	46.1	151	47.7	155	48.1	158	48.5
	35	99.2	28.0	118	35.8	137	44.5	147	49.2	149	49.4	152	49.9	156	50.3
	37	99.2	29.8	118	38.0	137	47.4	145	50.9	146	51.2	150	51.6	154	52.1
	39	99.2	31.6	118	40.5	137	50.5	142	52.7	144	52.9	148	53.4	151	53.9

Cooling capacity

Combination(%) (Capacity index)	Outdoor air temp. °CDB	Indoor air temp. 14.0°CWB TC kW	14.0°CWB PI kW	16.0°CWB TC kW	16.0°CWB PI kW	18.0°CWB TC kW	18.0°CWB PI kW	19.0°CWB TC kW	19.0°CWB PI kW	20.0°CWB TC kW	20.0°CWB PI kW	22.0°CWB TC kW	22.0°CWB PI kW	24.0°CWB TC kW	24.0°CWB PI kW
90 (1215)	10	89.3	15.2	106.5	18.3	124	21.6	132	23.3	141	25.1	158	28.6	175	32.3
	12	89.3	15.4	106.5	18.6	124	22.0	132	23.8	141	25.5	158	29.2	175	32.9
	14	89.3	15.7	106.5	19.0	124	22.4	132	24.2	141	26.0	158	29.7	175	33.5
	16	89.3	16.0	106.5	19.3	124	22.8	132	24.7	141	26.5	158	30.3	175	34.1
	18	89.3	16.3	106.5	19.7	124	23.3	132	25.2	141	27.0	158	30.9	173	35.1
	20	89.3	16.6	106.5	20.1	124	23.8	132	25.7	141	28.1	158	33.2	170	36.8
	21	89.3	16.7	106.5	20.3	124	24.2	132	26.6	141	29.1	158	34.4	169	37.7
	23	89.3	17.0	106.5	21.1	124	25.9	132	28.4	141	31.1	158	36.9	167	39.4
	25	89.3	17.9	106.5	22.5	124	27.6	132	30.4	141	33.3	158	39.5	164	41.1
	27	89.3	19.1	106.5	24.0	124	29.5	132	32.5	141	35.6	158	42.3	162	42.9
	29	89.3	20.3	106.5	25.6	124	31.5	132	34.7	141	38.0	156	44.3	159	44.6
	31	89.3	21.6	106.5	27.3	124	33.6	132	37.0	141	40.6	154	46.0	157	46.3
	33	89.3	23.0	106.5	29.0	124	35.8	132	39.4	141	43.3	151	47.7	155	48.1
	35	89.3	24.4	106.5	30.8	124	38.1	132	42.0	141	46.2	149	49.5	152	49.8
	37	89.3	25.9	106.5	32.8	124	40.6	132	44.8	141	49.2	147	51.2	150	51.6
	39	89.3	27.4	106.5	34.8	124	43.2	132	47.7	141	52.4	144	53.0	148	53.4
80 (1080)	10	79.4	13.5	94.7	16.1	110	19.0	118	20.4	125	21.9	141	25.0	156	28.2
	12	79.4	13.7	94.7	16.4	110	19.3	118	20.8	125	22.3	141	25.5	156	28.7
	14	79.4	13.9	94.7	16.7	110	19.6	118	21.2	125	22.7	141	25.9	156	29.2
	16	79.4	14.1	94.7	17.0	110	20.0	118	21.6	125	23.2	141	26.4	156	29.8
	18	79.4	14.4	94.7	17.3	110	20.4	118	22.0	125	23.6	141	27.0	156	30.4
	20	79.4	14.6	94.7	17.6	110	20.8	118	22.4	125	24.1	141	28.0	156	32.5
	21	79.4	14.8	94.7	17.8	110	21.0	118	22.6	125	24.6	141	29.0	156	33.7
	23	79.4	15.1	94.7	18.1	110	22.0	118	24.1	125	26.3	141	31.0	156	36.1
	25	79.4	15.5	94.7	19.3	110	23.5	118	25.8	125	28.1	141	33.2	156	38.7
	27	79.4	16.5	94.7	20.6	110	25.1	118	27.5	125	30.0	141	35.5	156	41.4
	29	79.4	17.6	94.7	21.9	110	26.7	118	29.3	125	32.1	141	37.9	156	44.2
	31	79.4	18.7	94.7	23.3	110	28.5	118	31.3	125	34.2	141	40.4	153	45.9
	33	79.4	19.8	94.7	24.8	110	30.3	118	33.3	125	36.4	141	43.1	151	47.7
	35	79.4	21.0	94.7	26.3	110	32.2	118	35.4	125	38.8	141	46.0	149	49.4
	37	79.4	22.3	94.7	27.9	110	34.3	118	37.7	125	41.3	141	49.0	146	51.1
	39	79.4	23.6	94.7	29.7	110	36.4	118	40.1	125	44.0	141	52.2	144	52.9
70 (945)	10	69.4	11.8	82.8	14.1	96.2	16.4	102.9	17.6	110	18.9	123	21.5	136	24.1
	12	69.4	12.0	82.8	14.3	96.2	16.7	102.9	17.9	110	19.2	123	21.9	136	24.6
	14	69.4	12.2	82.8	14.5	96.2	17.0	102.9	18.3	110	19.6	123	22.3	136	25.1
	16	69.4	12.4	82.8	14.8	96.2	17.3	102.9	18.6	110	19.9	123	22.7	136	25.5
	18	69.4	12.6	82.8	15.0	96.2	17.6	102.9	19.0	110	20.3	123	23.1	136	26.0
	20	69.4	12.8	82.8	15.3	96.2	17.9	102.9	19.3	110	20.7	123	23.6	136	26.8
	21	69.4	12.9	82.8	15.4	96.2	18.1	102.9	19.5	110	20.9	123	24.0	136	27.7
	23	69.4	13.2	82.8	15.7	96.2	18.5	102.9	20.2	110	21.9	123	25.7	136	29.7
	25	69.4	13.4	82.8	16.4	96.2	19.7	102.9	21.5	110	23.4	123	27.4	136	31.8
	27	69.4	14.2	82.8	17.4	96.2	21.0	102.9	22.9	110	25.0	123	29.3	136	33.9
	29	69.4	15.0	82.8	18.5	96.2	22.4	102.9	24.4	110	26.6	123	31.2	136	36.2
	31	69.4	15.9	82.8	19.7	96.2	23.8	102.9	26.0	110	28.3	123	33.3	136	38.7
	33	69.4	16.9	82.8	20.9	96.2	25.3	102.9	27.7	110	30.2	123	35.5	136	41.2
	35	69.4	17.9	82.8	22.1	96.2	26.9	102.9	29.4	110	32.1	123	37.8	136	44.0
	37	69.4	18.9	82.8	23.5	96.2	28.5	102.9	31.3	110	34.1	123	40.2	136	46.8
	39	69.4	20.0	82.8	24.9	96.2	30.3	102.9	33.2	110	36.3	123	42.8	136	49.9
60 (810)	10	59.5	10.3	71.0	12.1	82.5	14.0	88.2	15.0	93.9	16.0	105.4	18.1	117	20.3
	12	59.5	10.5	71.0	12.3	82.5	14.2	88.2	15.2	93.9	16.3	105.4	18.4	117	20.6
	14	59.5	10.6	71.0	12.5	82.5	14.5	88.2	15.5	93.9	16.6	105.4	18.8	117	21.0
	16	59.5	10.8	71.0	12.7	82.5	14.7	88.2	15.8	93.9	16.9	105.4	19.1	117	21.4
	18	59.5	10.9	71.0	12.9	82.5	15.0	88.2	16.1	93.9	17.2	105.4	19.5	117	21.8
	20	59.5	11.1	71.0	13.1	82.5	15.2	88.2	16.3	93.9	17.5	105.4	19.8	117	22.3
	21	59.5	11.2	71.0	13.2	82.5	15.4	88.2	16.5	93.9	17.7	105.4	20.0	117	22.5
	23	59.5	11.4	71.0	13.4	82.5	15.7	88.2	16.8	93.9	18.0	105.4	20.8	117	23.9
	25	59.5	11.6	71.0	13.7	82.5	16.3	88.2	17.7	93.9	19.1	105.4	22.2	117	25.6
	27	59.5	12.0	71.0	14.5	82.5	17.3	88.2	18.8	93.9	20.4	105.4	23.7	117	27.3
	29	59.5	12.7	71.0	15.4	82.5	18.4	88.2	20.0	93.9	21.7	105.4	25.2	117	29.1
	31	59.5	13.4	71.0	16.3	82.5	19.6	88.2	21.3	93.9	23.1	105.4	26.9	117	31.0
	33	59.5	14.2	71.0	17.3	82.5	20.8	88.2	22.6	93.9	24.5	105.4	28.6	117	33.0
	35	59.5	15.0	71.0	18.4	82.5	22.0	88.2	24.0	93.9	26.0	105.4	30.4	117	35.1
	37	59.5	15.9	71.0	19.4	82.5	23.4	88.2	25.5	93.9	27.6	105.4	32.3	117	37.4
	39	59.5	16.8	71.0	20.6	82.5	24.8	88.2	27.0	93.9	29.3	105.4	34.4	117	39.8
50 (675)	10	49.6	8.86	59.2	10.2	68.7	11.7	73.5	12.5	78.3	13.3	87.8	14.9	97.4	16.6
	12	49.6	8.97	59.2	10.4	68.7	11.9	73.5	12.7	78.3	13.5	87.8	15.2	97.4	16.9
	14	49.6	9.09	59.2	10.5	68.7	12.1	73.5	12.9	78.3	13.7	87.8	15.4	97.4	17.2
	16	49.6	9.21	59.2	10.7	68.7	12.3	73.5	13.1	78.3	14.0	87.8	15.7	97.4	17.5
	18	49.6	9.34	59.2	10.9	68.7	12.5	73.5	13.3	78.3	14.2	87.8	16.0	97.4	17.8
	20	49.6	9.47	59.2	11.0	68.7	12.7	73.5	13.6	78.3	14.4	87.8	16.3	97.4	18.2
	21	49.6	9.54	59.2	11.1	68.7	12.8	73.5	13.7	78.3	14.6	87.8	16.4	97.4	18.4
	23	49.6	9.69	59.2	11.3	68.7	13.0	73.5	13.9	78.3	14.8	87.8	16.7	97.4	18.8
	25	49.6	9.83	59.2	11.5	68.7	13.3	73.5	14.2	78.3	15.3	87.8	17.6	97.4	20.0
	27	49.6	9.99	59.2	11.9	68.7	14.0	73.5	15.1	78.3	16.3	87.8	18.7	97.4	21.3
	29	49.6	10.6	59.2	12.6	68.7	14.8	73.5	16.0	78.3	17.3	87.8	19.9	97.4	22.7
	31	49.6	11.2	59.2	13.4	68.7	15.7	73.5	17.0	78.3	18.3	87.8	21.2	97.4	24.2
	33	49.6	11.8	59.2	14.1	68.7	16.7	73.5	18.0	78.3	19.5	87.8	22.5	97.4	25.7
	35	49.6	12.4	59.2	14.9	68.7	17.7	73.5	19.1	78.3	20.6	87.8	23.9	97.4	27.3
	37	49.6	13.1	59.2	15.8	68.7	18.7	73.5	20.3	78.3	21.9	87.8	25.3	97.4	29.0
	39	49.6	13.8	59.2	16.7	68.7	19.8	73.5	21.4	78.3	23.2	87.8	26.9	97.4	30.8

TC Total capacity ; kW
PI Power Input ; kW(Comp.+Outdoor fan motor)
Note1: The above table shows the average value of conditions which may occur.

8.2 Capacity Correction Factor (RXQ-P)

RXQ5PY1

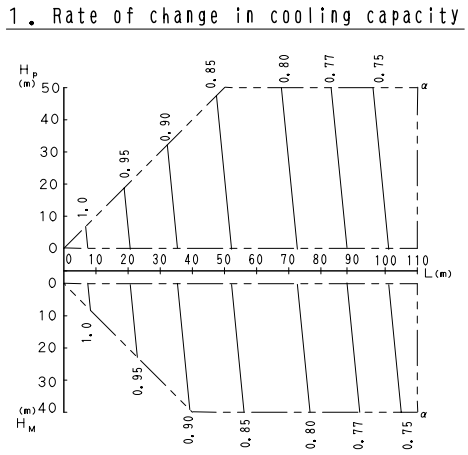

C: 3D056913

RXQ8PY1

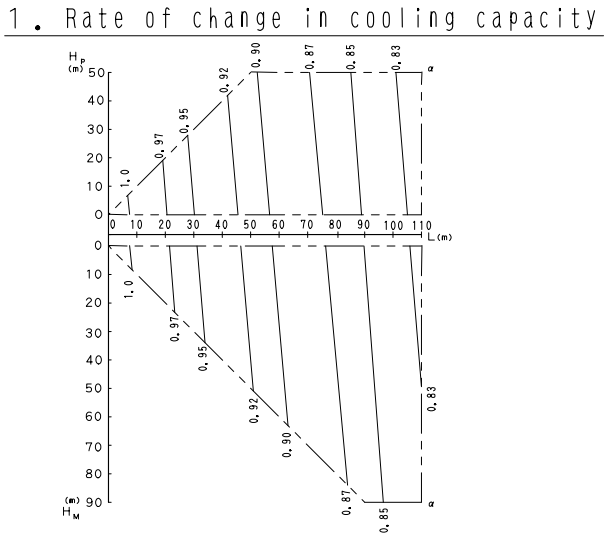

C: 3D056914

RXQ10PY1

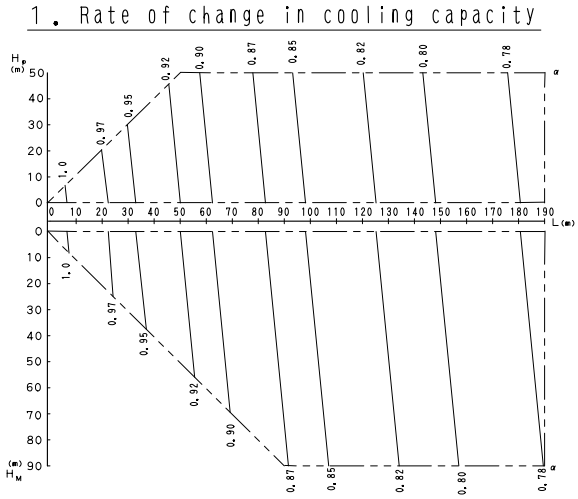

C: 3D056915

RXQ12PY1 / RXQ14PY1 / RXQ24PY1 / RXQ36PY1

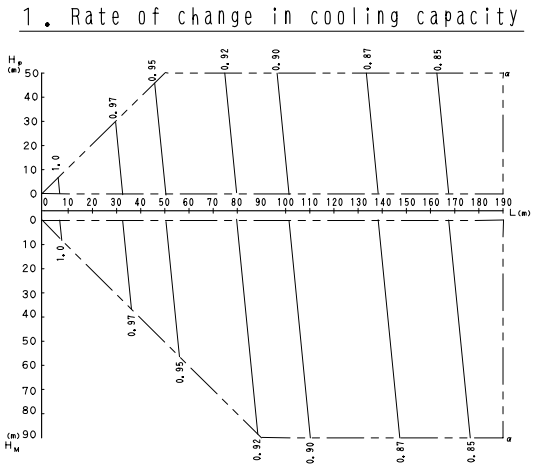

C: 3D056902

RXQ16PY1

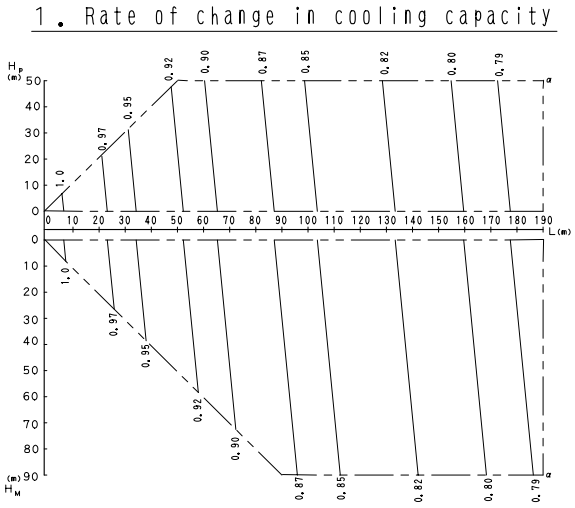

C: 3D056903

13

RXQ18PY1 / RXQ26PY1 / RXQ28PY1 / RXQ30PY1 / RXQ38PY1 / RXQ40PY1 / RXQ42PY1 / RXQ44PY1

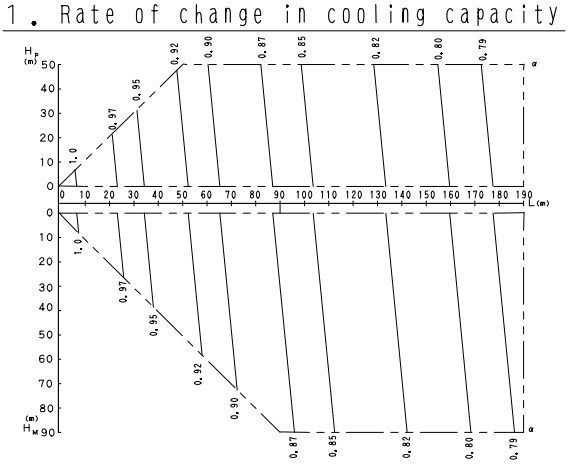

C: 3D056904

RXQ22PY1

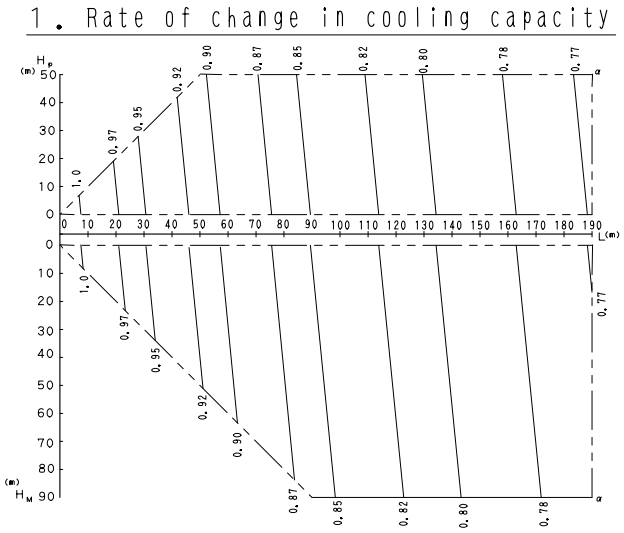

C: 3D056905

RXQ20PY1/ RXQ32PY1 / RXQ34PY1

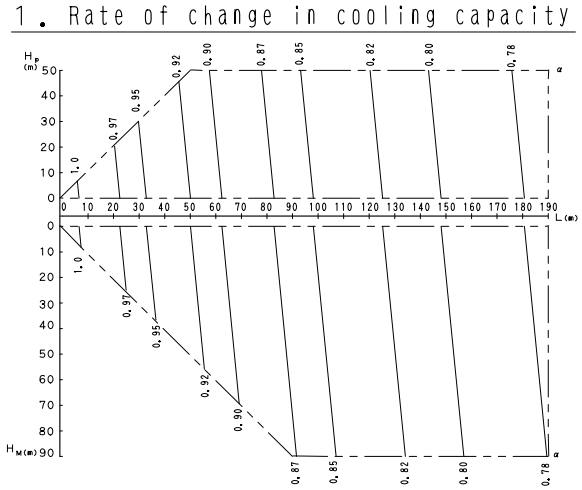

C: 3D056906

RXQ46PY1

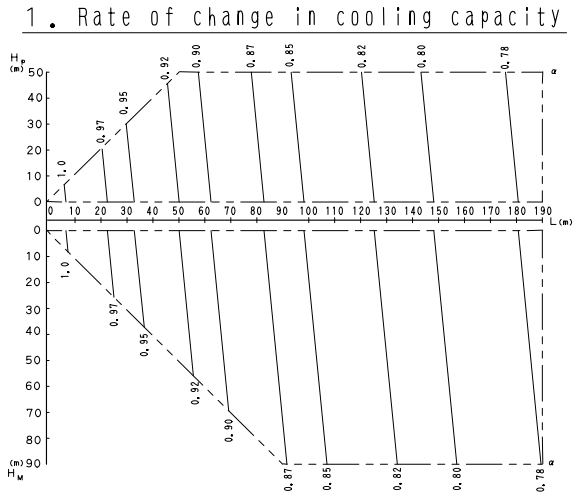

C: 3D056907

RXQ48PY1

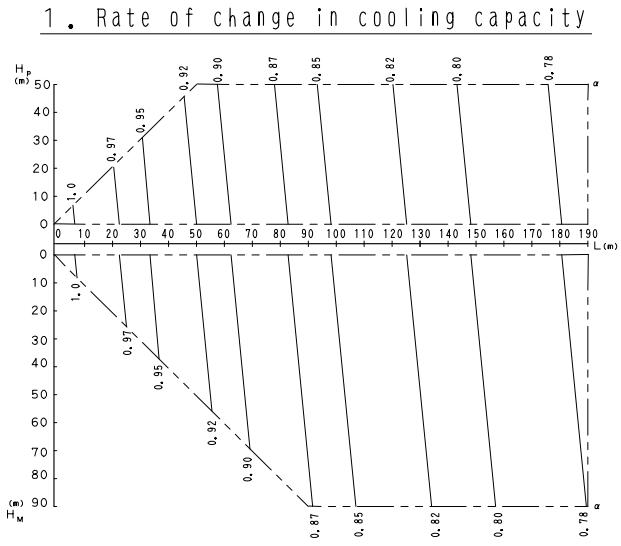

C: 3D056908

RXQ50PY1

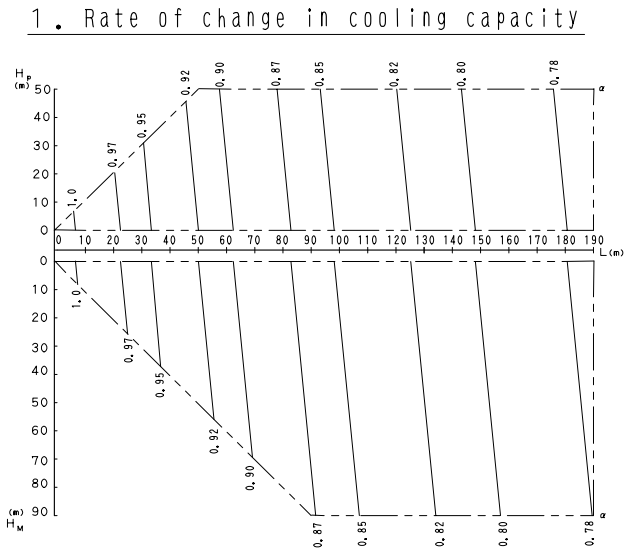

C: 3D056909

RXQ52PY1

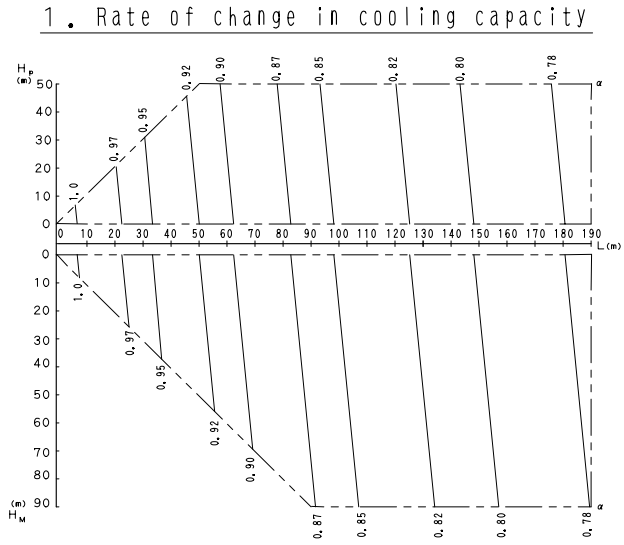

C: 3D056910

RXQ54PY1

1. Rate of change in cooling capacity

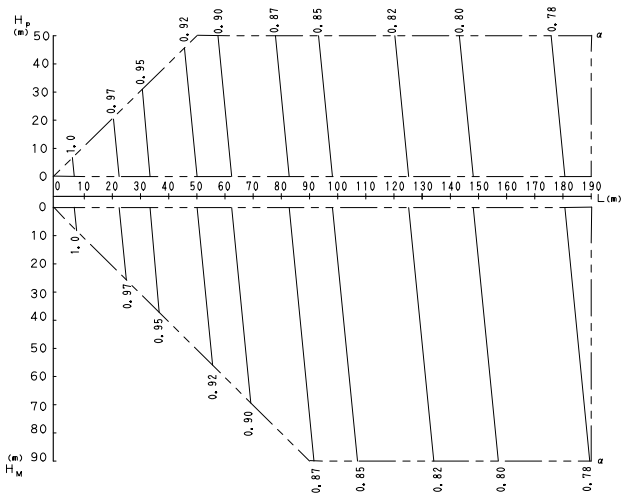

C: 3D056911

[Explanation of symbols]

H_P : Level difference (m) between indoor and outdoor units where indoor unit in inferior position

H_M : Level difference (m) between indoor and outdoor units where indoor unit in superior position

L : Equivalent pipe length (m)

α : Rate of change in cooling/heating capacity

[Diameters of pipes (Standard size)]

Model	Gas	Liquid
RXQ5PY1	ϕ15.9	ϕ9.5
RXQ8PY1	ϕ19.1	ϕ9.5
RXQ10PY1	ϕ22.2	ϕ9.5
RXQ12PY1	ϕ28.6	ϕ12.7
RXQ14PY1	ϕ28.6	ϕ12.7
RXQ16PY1	ϕ28.6	ϕ12.7

Model	Gas	Liquid
RXQ18PY1	ϕ28.6	ϕ15.9
RXQ20PY1	ϕ28.6	ϕ15.9
RXQ22PY1	ϕ28.6	ϕ15.9
RXQ24PY1	ϕ34.9	ϕ15.9
RXQ26PY1	ϕ34.9	ϕ19.1
RXQ28PY1	ϕ34.9	ϕ19.1

Model	Gas	Liquid
RXQ30PY1	ϕ34.9	ϕ19.1
RXQ32PY1	ϕ34.9	ϕ19.1
RXQ34PY1	ϕ34.9	ϕ19.1
RXQ36PY1	ϕ41.3	ϕ19.1
RXQ38PY1	ϕ41.3	ϕ19.1
RXQ40PY1	ϕ41.3	ϕ19.1

Model	Gas	Liquid
RXQ42PY1	ϕ41.3	ϕ19.1
RXQ44PY1	ϕ41.3	ϕ19.1
RXQ46PY1	ϕ41.3	ϕ19.1
RXQ48PY1	ϕ41.3	ϕ19.1
RXQ50PY1	ϕ41.3	ϕ19.1
RXQ52PY1	ϕ41.3	ϕ19.1
RXQ54PY1	ϕ41.3	ϕ19.1

[Notes]

1. These figures illustrate the rate of change in capacity of a standard indoor unit system at maximum load (with the thermostat set to maximum)under standard conditions.
   Moreover, under partial load conditions there is only a minor deviation from the rate of change in capacity shown in the above figures.
2. With this outdoor unit, evaporating pressure constant control when cooling, and condensing pressure constant control when heating is carried out.
3. Method of calculating A/C (cooling/heating) capacity:
   The maximum A/C capacity of the system will be either the total A/C capacity of the indoor units obtained from capacity characteristic table or the maximum A/C capacity of outdoor units as mentioned bellow, whichever smaller.

   Calculating A/C capacity of outdoor units

   • Condition: Indoor unit combination ratio does not exceed 100%.

   Maximum A/C capacity of outdoor units = A/C capacity of outdoor units obtained from capacity characteristic table at the 100% combination
   X Capacity change rate due to piping length to the farthest indoor unit

   • Condition: Indoor unit combination ratio exceeds 100%.

   Maximum A/C capacity of outdoor units = A/C capacity of outdoor units obtained from capacity characteristic table at the combination
   X Capacity change rate due to piping length to the farthest indoor unit

4. When overall equivalent pipe length is 90m or more, the diameter of the main gas and liquid pipes (outdoor unit-branch sections) must be increased.
   When level difference is 50m or more, the diameter of the main liquid pipe (outdoor unit-branch sections) must be increased.

■ Diameter of above case

Model	Gas	Liquid
RXQ5PY1	ϕ19.1	Not Increased
RXQ8PY1	ϕ22.2	ϕ12.7
RXQ10PY1	ϕ25.4*	ϕ12.7
RXQ12PY1	Not Increased	ϕ15.9
RXQ14PY1	Not Increased	ϕ15.9
RXQ16PY1	ϕ31.8	ϕ15.9

Model	Gas	Liquid
RXQ18PY1	ϕ31.8	ϕ19.1
RXQ20PY1	ϕ31.8	ϕ19.1
RXQ22PY1	ϕ31.8	ϕ19.1
RXQ24PY1	Not Increased	ϕ19.1
RXQ26PY1	ϕ38.1*	ϕ22.2
RXQ28PY1	ϕ38.1*	ϕ22.2

Model	Gas	Liquid
RXQ30PY1	ϕ38.1*	ϕ22.2
RXQ32PY1	ϕ38.1*	ϕ22.2
RXQ34PY1	ϕ38.1*	ϕ22.2
RXQ36PY1	Not Increased	ϕ22.2
RXQ38PY1	Not Increased	ϕ22.2
RXQ40PY1	Not Increased	ϕ22.2

Model	Gas	Liquid
RXQ42PY1	Not Increased	ϕ22.2
RXQ44PY1	Not Increased	ϕ22.2
RXQ46PY1	Not Increased	ϕ22.2
RXQ48PY1	Not Increased	ϕ22.2
RXQ50PY1	Not Increased	ϕ22.2
RXQ52PY1	Not Increased	ϕ22.2
RXQ54PY1	Not Increased	ϕ22.2

*If available on the site, use this size. Otherwise it can not be increased.

(Unit: mm)

Temper grade	O Type				1/2 Type							
Outer diameter	ϕ6.4	ϕ9.5	ϕ12.7	ϕ15.9	ϕ19.1	ϕ22.2	ϕ25.4	ϕ28.6	ϕ31.8	ϕ34.9	ϕ38.1	ϕ41.3
Minimum Wall Thickness	0.80	0.80	0.80	0.99	0.80	0.80	0.88	0.99	1.10	1.21	1.32	1.43

5. Read cooling / heating capacity rate of change in the above figures based on the following equivalent length.

Overall equivalent length=
(Equivalent length to main pipe)×Correction factor+(Equivalent length after branching)

Choose a correction factor from the following table.
When cooling capacity is calculated : gas pipe size

Rate of change (object piping)	Correction factor	
	Standard size	Size increase
Cooling (gas pipe)	1.0	0.5

(Example) RXQ5PY1

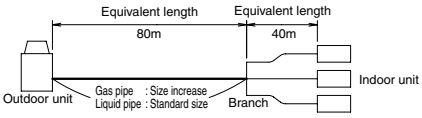

In the above case
(Cooling) Overall equivalent length=80m×0.5+40m=80m

The rate of change in
cooling capacity when Hp=0m is thus approximately 0.79

Rate of change (object piping)	Correction factor	
	Standard size	Size increase
Cooling (gas pipe)	1.0	0.5

(Example) RXQ8PY1

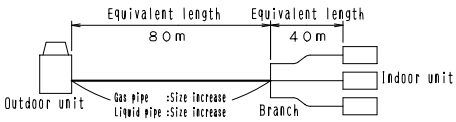

In the above case
(Cooling) Overall equivalent length=80m×0.5+40m=80m

The rete of change in
cooling capacity when Hp=0m is thus approximately 0.86

Rate of change (object piping)	Correction factor	
	Standard size	Size increase
Cooling (gas pipe)	1.0	0.5

(Example) RXQ10PY1

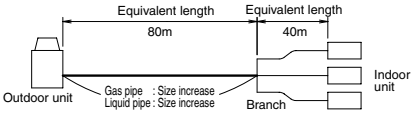

In the above case
(Cooling) Overall equivalent length=80m×0.5+40m=80m

The rate of change in
cooling capacity when Hp=0m is thus approximately 0.87

Rate of change (object piping)	Correction factor	
	Standard size	Size increase
Cooling (gas pipe)	1.0	0.5

(Example) RXQ16PY1

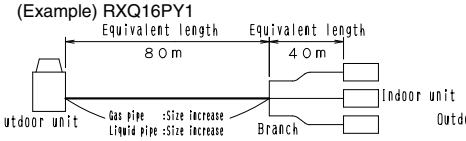

In the above case
(Cooling) Overall equivalent length=80m×0.5+40m=80m

The rete of change in
cooling capacity when Hp=0m is thus approximately 0.88

Rate of change (object piping)	Correction factor	
	Standard size	Size increase
Cooling (gas pipe)	1.0	0.5

(Example) RXQ22PY1

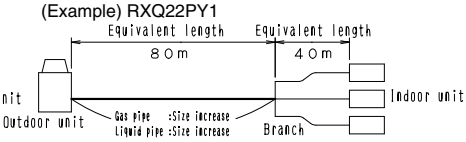

In the above case
(Cooling) Overall equivalent length=80m×0.5+40m=80m

The rete of change in
cooling capacity when Hp=0m is thus approximately 0.86

Rate of change (object piping)	Correction factor		
	Standard size	Size increase	
		12・14HP	24・36HP
Cooling (gas pipe)	1.0		

(Example) RXQ12, 14, 24, 36PY1

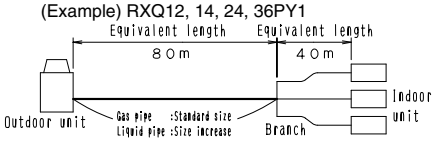

In the above case
(Cooling) Overall equivalent length=80m×1.0+40m=120m

The rete of change in
cooling capacity when Hp=0m is thus approximately 0.88

Rate of change (object piping)	Correction factor	
	Standard size	Size increase
Cooling (gas pipe)	1.0	0.5

(Example) RXQ38PY1 (18, 26, 28, 30, 38, 40, 42, 44PY1)

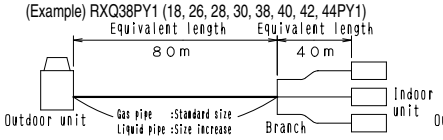

In the above case
(Cooling) Overall equivalent length=80m×1.0+40m=120m

The rete of change in
cooling capacity when Hp=0m is thus approximately 0.83

Rate of change (object piping)	Correction factor	
	Standard size	Size increase
Cooling (gas pipe)	1.0	0.5

(Example) RXQ32PY1 (20, 32, 34PY1)

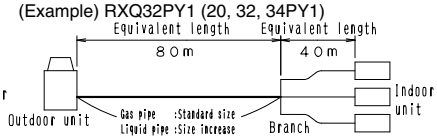

In the above case
(Cooling) Overall equivalent length=80m×0.5+40m=80m

The rete of change in
cooling capacity when Hp=0m is thus approximately 0.87

Rate of change (object piping)	Correction factor	
	Standard size	Size increase
Cooling (gas pipe)	1.0	

(Example) RXQ46PY1

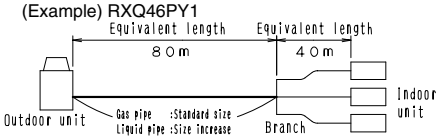

In the above case
(Cooling) Overall equivalent length=80m×1.0+40m=120m

The rete of change in
cooling capacity when Hp=0m is thus approximately 0.82

Rate of change (object piping)	Correction factor	
	Standard size	Size increase
Cooling (gas pipe)	1.0	

(Example) RXQ48PY1

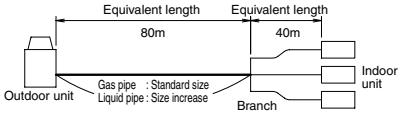

In the above case
(Cooling) Overall equivalent length=80m×1.0+40m=120m

The rate of change in
cooling capacity when Hp=0m is thus approximately 0.82

Rate of change (object piping)	Correction factor	
	Standard size	Size increase
Cooling (gas pipe)	1.0	

(Example) RXQ50PY1

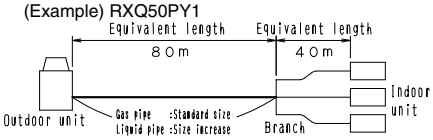

In the above case
(Cooling) Overall equivalent length=80m×1.0+40m=120m

The rete of change in
cooling capacity when Hp=0m is thus approximately 0.82

Rate of change (object piping)	Correction factor	
	Standard size	Size increase
Cooling (gas pipe)	1.0	

(Example) RXQ52PY1

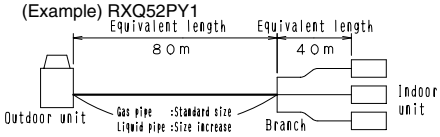

In the above case
(Cooling) Overall equivalent length=80m×1.0+40m=120m

The rete of change in
cooling capacity when Hp=0m is thus approximately 0.82

Rate of change (object piping)	Correction factor	
	Standard size	Size increase
Cooling (gas pipe)	1.0	

(Example) RXQ54PY1

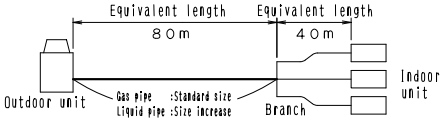

In the above case
(Cooling) Overall equivalent length=80m×1.0+40m=120m

The rete of change in
cooling capacity when Hp=0m is thus approximately 0.82

6. If heat insulation of piping is insufficient, heat loss will become larger and capacity will decrease.

9. Operation Limits

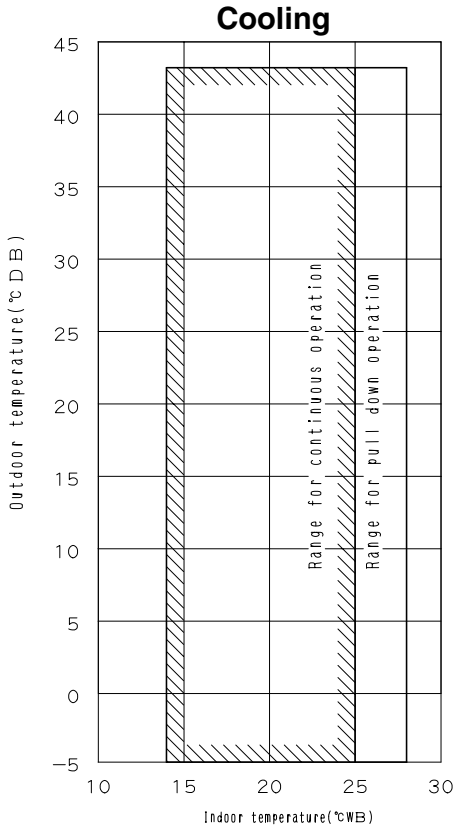

Note:These figures assume the following
operating conditions:
Indoor and outdoor units:
Equivalent pipe length: m
Level difference:0m

3D041560C

13

10. Sound Levels

10.1 50Hz

Overall

dBA

Power Supply / Model	50Hz/380-415V
RXQ5PY1	54
RXQ8PY1	57
RXQ10PY1	58
RXQ12PY1	60
RXQ14PY1	60
RXQ16PY1	60
RXQ18PY1	63
RXQ20PY1	62
RXQ22PY1	62

dBA

Power Supply / Model	50Hz/380-415V
RXQ24PY1	62
RXQ26PY1	64
RXQ28PY1	64
RXQ30PY1	65
RXQ32PY1	63
RXQ34PY1	65
RXQ36PY1	66
RXQ38PY1	65
RXQ40PY1	64

dBA

Power Supply / Model	50Hz/380-415V
RXQ42PY1	65
RXQ44PY1	67
RXQ46PY1	67
RXQ48PY1	67
RXQ50PY1	67
RXQ52PY1	67
RXQ54PY1	68

(Note)
Sound level:
Anechoic chamber conversion value, measured at a point 1 m in front of the unit at a height of 1.5m.
During actual operation, these values are normally somewhat higher as a result of ambient conditions.

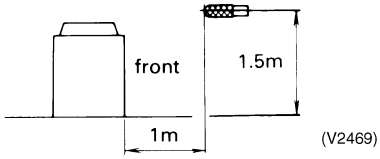

Octave Band Level

○ - - - - ○ **50Hz**

RXQ5PY1

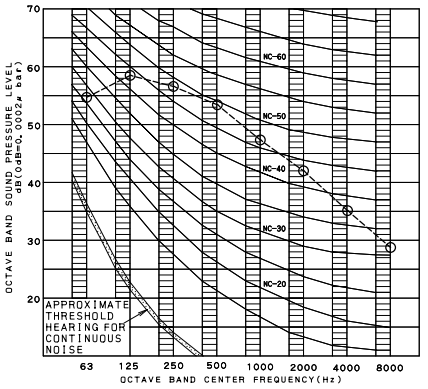

4D052394

RXQ8PY1

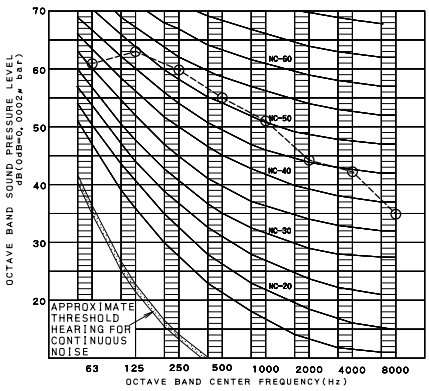

4D052395A

RXQ10PY1

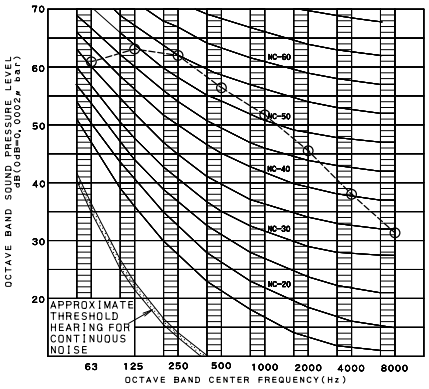

4D052396A

RXQ12, 14, 16PY1

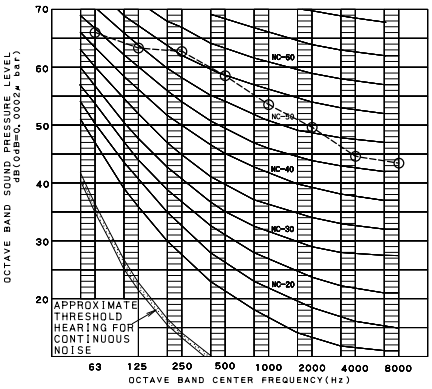

4D052397A

RXQ18PY1

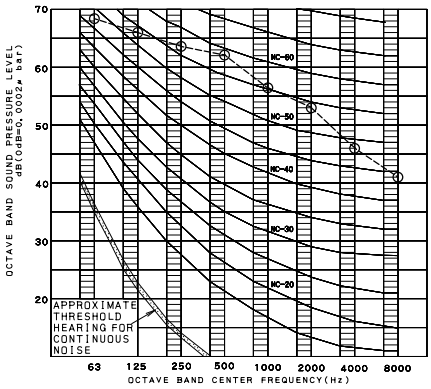

4D052398

11. Accessories

11.1 Standard Accessories

Q5~Q18 type				
Name	Clamp (1)	Clamp (2)	Clamp (3)	Gas side accessory pipe (1)
Quantity	9 pcs.	2 pcs.	1 pc.	1 pc.
Shape	 Small		 Large	

Q5~Q18 type				
Name	Gas side accessory pipe (2)	Liquid side accessory pipe (1)	Liquid side accessory pipe (2)	Others
Quantity	1 pc.	1 pc.	1 pc.	• Operation manual • Installation manual • Declaration of conformity (PED) (8-18HP) • “Request for the Indication” label (Installation Records)
Shape	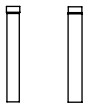 5-10 HP type 12-18 HP type		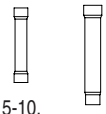 5-10, 14,16 HP type 12,18 HP type	

[RXQ5 · 8 · 10 type]

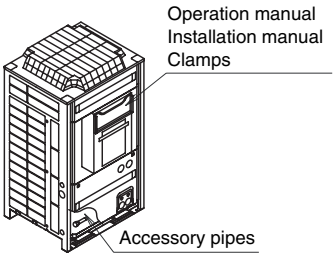

[RXQ12 · 14 · 16 · 18 type]

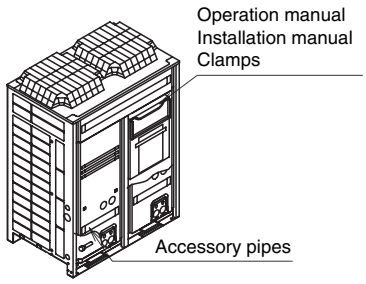

13

11.2 Optional Accessories

RXQ5 ~ 18PY1

Optional accessories		RXQ5PY1	RXQ8PY1 RXQ10PY1	RXQ12PY1 RXQ14PY1 RXQ16PY1 RXQ18PY1
Distributive Piping	Refnet header	KHRP26M22H (Max. 4 branch)	KHRP26M22H, (Max. 4 branch) KHRP26M33H (Max. 8 branch)	KHRP26M22H, KHRP26M33H, (Max. 4 branch) (Max. 8 branch) KHRP26M72H (Max. 8 branch)
	Refnet joint	KHRP26A22T	KHRP26A22T, KHRP26A33T	KHRP26A22T, KHRP26A33T, KHRP26A72T
Central drain pan kit		KWC26C160	KWC26C280	KWC26C450
Digital Pressure Gauge Kit		BHGP26A1(E)		

C : 3D056901

RXQ20 ~ 36PY1

Optional accessories		RXQ20PY1 RXQ22PY1	RXQ24PY1 RXQ26PY1 RXQ28PY1	RXQ30PY1 RXQ32PY1 RXQ34PY1 RXQ36PY1
Distributive Piping	Refnet header	KHRP26M22H (Max. 4 branch), KHRP26M33H (Max. 8 branch), KHRP26M72H (Max. 8 branch)	KHRP26M22H, KHRP26M33H, KHRP26M72H, KHRP26M73H (Max. 4 branch) (Max. 8 branch) (Max. 8 branch) (Max. 8 branch)	
	Refnet joint	KHRP26A22T, KHRP26A33T, KHRP26A72T	KHRP26A22T, KHRP26A33T, KHRP26A72T, KHRP26A73T	
Outdoor unit multi connection piping kit		BHFP22P100		
Pipe size reducer		—	KHRP26M73TP, KHRP26M73HP	
Central drain pan kit		KWC26C280 KWC26C450	KWC26C280 KWC26C450	KWC26C450×2
Digital Pressure Gauge Kit		BHGP26A1(E)		

C : 3D056901

RXQ38 ~ 54PY1

Optional accessories		RXQ38PY1 RXQ40PY1 RXQ42PY1 RXQ44PY1 RXQ46PY1	RXQ48PY1 RXQ50PY1 RXQ52PY1 RXQ54PY1
Distributive Piping	Refnet header	KHRP26M22H, KHRP26M33H, KHRP26M72H, KHRP26M73H (Max. 4 branch) (Max. 8 branch) (Max. 8 branch) (Max. 8 branch)	
	Refnet joint	KHRP26A22T, KHRP26A33T, KHRP26A72T, KHRP26A73T	
Outdoor unit multi connection piping kit		BHFP22P151	
Pipe size reducer		KHRP26M73TP, KHRP26M73HP	
Central drain pan kit		KWC26C280 KWC26C450×2	KWC26C450×3
Digital Pressure Gauge Kit		BHGP26A1(E)	

C : 3D056901

11.3 Digital Pressure Gauge Kit BHGP26A1(E)

Dimensions

	Model Name
Standard Type	BHGP26A1
Anti-Corrosion Type	BHGP26A1E

Note) 1. Installation Box
[Materials] : SGCC-Z22 (Standard)
SGCC-F08 (Anti-Corrosion • Heavy Anti-Corrosion)
light Camel (Anti-Corrosion)
gray (Heavy Anti-Corrosion)
2. Plastic Cover
[Materials] : Methacrylate Resin
[Finish of Surface] : flat finish
3. Standard Accessory : Set of Fixing Screw
Clamp Material
Gauge Window Name Plate
Plastic bush
Fixing manual
4. This kit is assembled on site

C : 3D055954

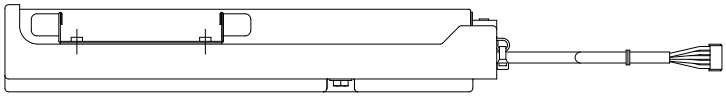

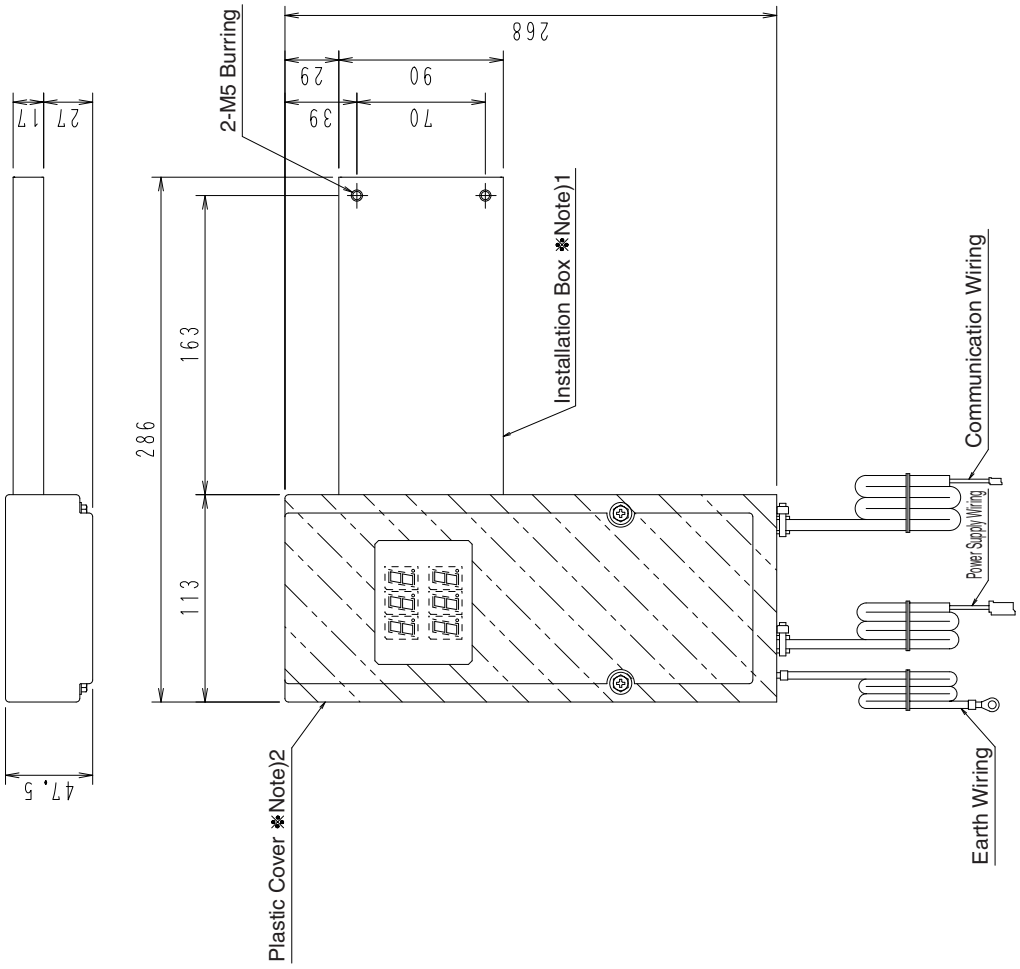

13

DAIKIN Air conditioner | **Sold separately** | Be sure to read and follow all the instructions in the Installation Manual when installing the product. 2P190979-1

Installation Manual of Digital Pressure Gauge Kit BHGP26A1 (E)

Component Parts

■ This Kit contains the following parts.

Parts name	Digital Pressure Gauge Assembly	Resin bush	Clamps		M5×12 screws	M4×12 screws	Gauge window label
			Small	Large			
Parts							
Number	1	1	6	1	2	1	1

Tools required for installation

Phillips screwdriver	Nippers

Cautions

- The Kit includes accessories required for installation. Do not dispose of these accessories until the product is properly installed.
- Before performing installation work, check with a catalog or technical data sheet that the outdoor unit is compatible with the Kit.

Installation procedure

Work procedure

⚠ Warning | ⚠ Electric Shock Cautions Be sure to work with the outdoor unit turned power OFF. An electric shock may be received if your body comes in contact with electric parts with the outdoor unit turned power ON.

1. Turn the outdoor unit power OFF.
2. Remove the front panel. (If the model has two front panels (i.e., one each on the left-hand side and right-hand side), remove the panel on the right-hand side only.)
3. Remove the lid of the electrical box.
4. Refer to the (Installation drawing) and mount the Digital Pressure Gauge Assembly to the panel on the right-hand side. [Parts used: Digital Pressure Gauge Assembly: 1; M5×12 screw: 2]
5. Secure the ground wire to the electrical box with a screw. Refer to section B (detail view) in the (Wiring drawing) for the screwing position. [Parts used: M4×12 screw: 1]
6. Connect the power supply line and communications line of the Digital Pressure Gauge Assembly to the control PCB (A1P) in the electrical box.
   - Power supply line: Connector (white) • X77A
   - Communications line: Connector (blue) • X27A

   At that time, wire the communications line behind the Digital Pressure Gauge Assembly. (Refer to section A (detail view) in the (Wiring drawing).)
7. After connecting the power supply line, communications line, and ground wire, secure the wiring path according to the (Wiring drawing). [Parts used: Clamps: small 6, large 1]
8. Mount the lid of the electrical box.
9. Punch out the knock hole with a diameter of 70 mm on the front panel. (Refer to the mounting dimensions on the upper right-hand side.)
10. Attach the resin bush to the knock hole on the front panel. [Parts used: Resin bush: 1]
11. Mount the front panel.
12. Paste the gauge window label to the front panel. Refer to the (Label pasting drawing) for the pasting position. [Parts used: Gauge window label]

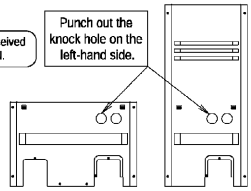

Knock hole on the front panel

Operation Check

⚠ Warning | ⚠ Electric Shock Cautions Close the lid of the electrical box and front panel before turning the product power ON. An electric shock may be received if your body comes in contact with electric parts.

On completion of installation, turn the outdoor unit and indoor unit power ON and make sure that pressures are displayed normally. When figures appear in the discharge pressure display and suction pressure display, the product is working normally. Refer to [Troubleshooting] on the right-hand side and take necessary remedies if no figures are displayed. If the trouble does not fall under any of the items described, contact your Daikin representative.

[Troubleshooting]

	Error display	Cause	Remedy
1	The LED indicator is not lit.	Power supply is not provided to the outdoor unit.	Provide power supply to the outdoor unit.
		The connector of the power supply line is unplugged.	Insert the connector of the power supply line.
		The power supply line is disconnected or damaged.	Replace the power supply line.
2	All LEDs blink.	The connector of the communications line is unplugged.	Plug in the connector of the communications line.
		The communications line is disconnected or damaged.	Replace the communications line.
		The outdoor unit is not compatible with the Kit.	Check with a catalog or technical data sheet if the outdoor unit is compatible with the Kit. If the outdoor unit is not compatible, this Kit cannot be used.
3	"□." blinks	The outdoor unit has a defect.	Refer to the Service Guide and remedy the problem.
		There is a high-voltage line generating noise around the communications line.	Noise may be imposed on the communications line. Separate the high-voltage line.

Wiring drawing

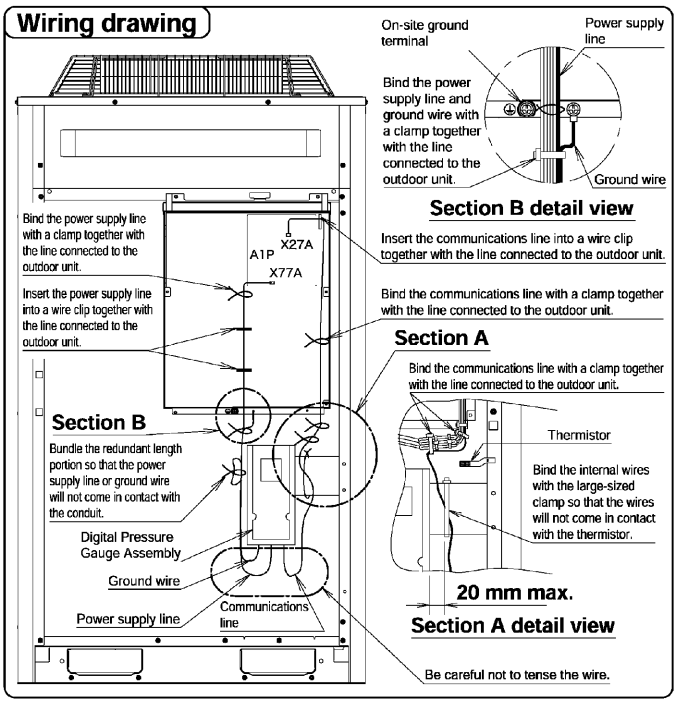

Installation draw

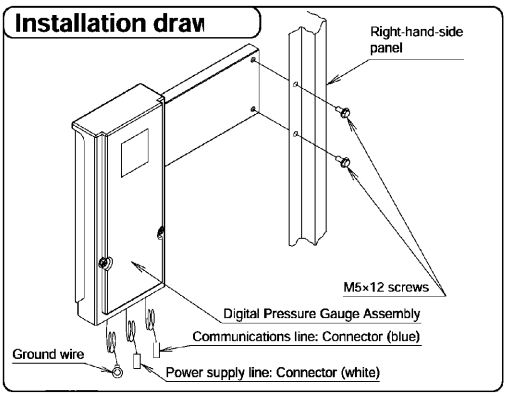

Label pasting drawing

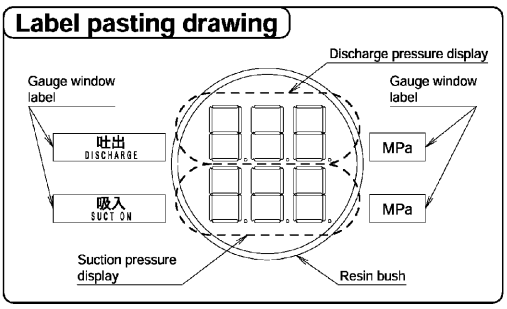

C : 2P190979

11.4 Central Drain Pan Kit KWC26C160, 280, 450

RXQ5P

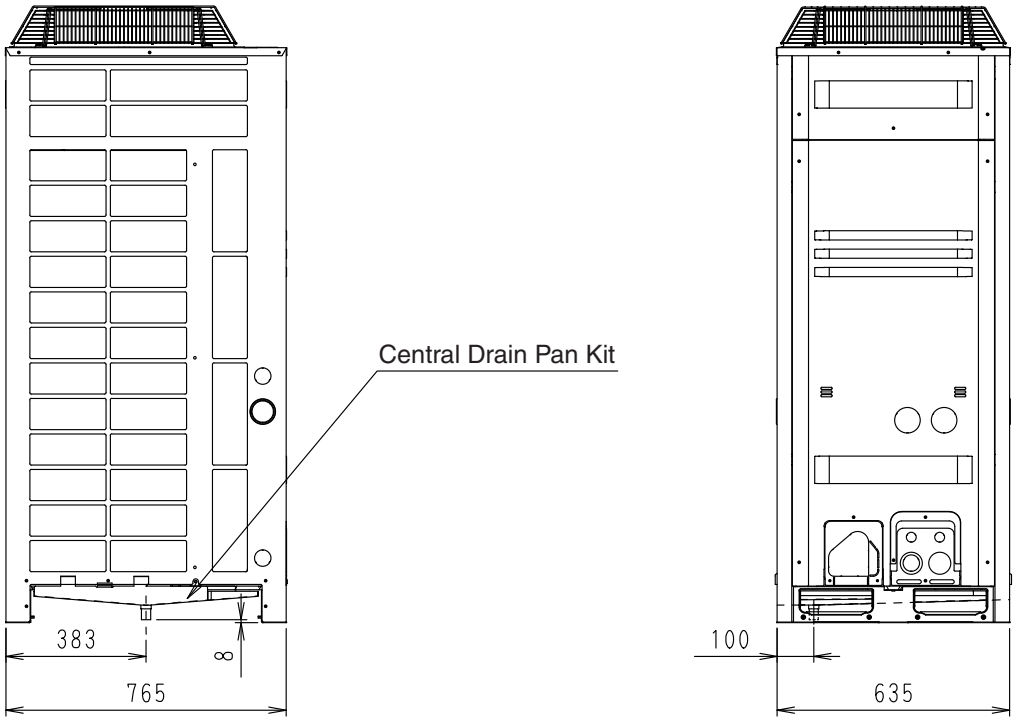

3D052253

RXQ8,10P

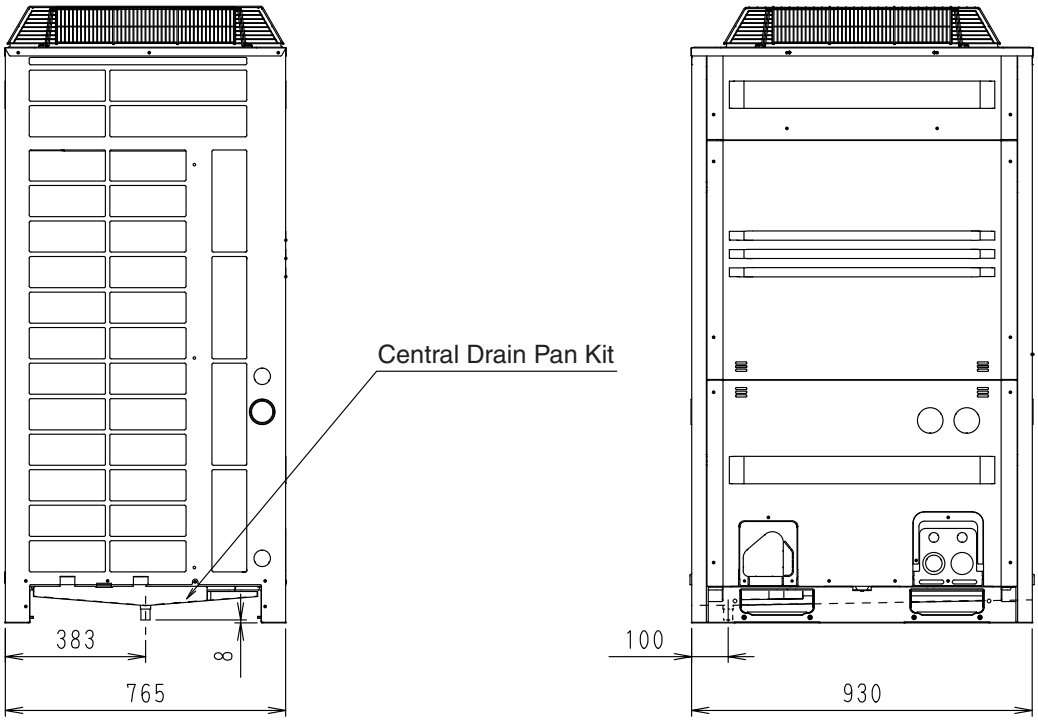

3D052254

13

RXQ12, 14, 16, 18P

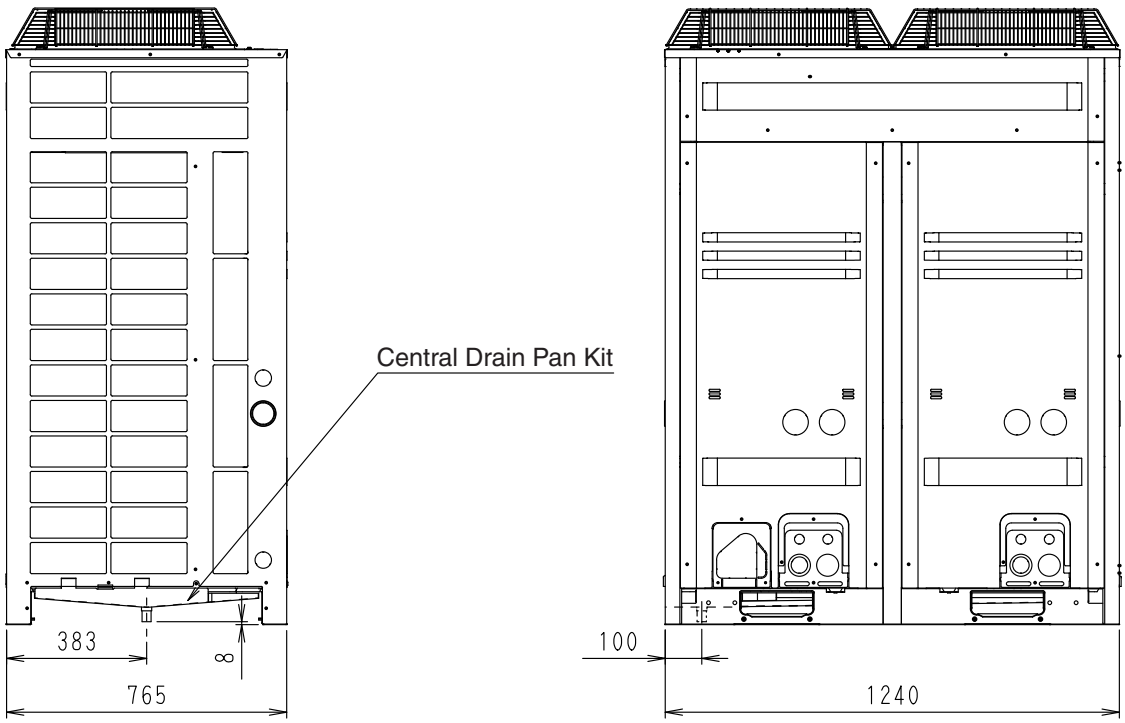

3D052255