PSB TEST ®

WRAS APPROVED PRODUCT

Kibo A+ Members Venture Enterprise

PPS Register Company

INTERNATIONAL CERTIFICATION REGISTRAR Ltd. ISO 9001:2008

WATER CLEAN TANK
HANSUNG M&S

Best Watertight Excellent Endurance

www.hsmns.com

HANSUNG M&S CO., LTD.

HANSUNG M&S CO., LTD.

For over 10 years, Hansung M&S has specialized in iron material manufacturing, supplying iron and sub-materials to some of the leading SMC water tank companies in Korea. With the onset of SMC water tank distribution, the company is now supplying Hansung Clean Water Tanks through years of accumulated expertise in quality control and technical capability.

Hansung M&S (Metal & SMC) challenges top-rated rivals; the company manufactures the key materials (iron and subsidiary materials & SMC panels) for SMC water tanks and spare no effort in the unceasing improvement of customer satisfaction through constant progression.

COMPANY

Company Name	Hansung M&S Co., Ltd.	CEO	Oh Hyun Cheol
Type of Business	Manufacturing	Item	SMC Water Tank
Address	1081 Woogye-ri, Sangdong-myeon,	Postcode	621-812
	Gimhae-si, Kyungsangnam-do	Tel	+82-55-346-2130~1
Company Formation	2001. 02. 01	Fax	+82-55-346-5116
Business Registration No.	615-81-56789		

HISTORY

2001.02 Found Hansung Metal
2007.07 Incorporation of going business
2008.06 Clean workplace recognition - Occupational Safety Authority
2009.10 ISO9001 Certification
2010.02 Hansung M&S Co., Ltd. Change of Company Name
2010.05 Moved to Sang-dong, Gimhae with expansion
Registered as a venture company
2010.10 Made an agreement of supply in Nara Market, Public Procurement Service

WATER CLEAN TANK HANSUNG M&S

Best Watertight Excellent Endurance

The SMC (Sheet Molding Compound) raw material is configured to pressure-molded panels (ceilings, floors, and walls) by molding; a water tank which is fully capable via using internal/external reinforcement and sealing tape with excellent recovery as well as basic functions of hygiene, watertightness, and durability.

Clean Water Tank is a good choice!

Hansung M&S' Clean Water Tank comprises SMC panels; it features convenient capacity adjustment according to size and structure of buildings, apartments, and compound buildings, with particularly outstanding hygiene and durability. Hansung Clean Water Tank enables storage of clean and fresh water.

FEATURE OF HANSUNG CLEAN TANK

Embo SMC Panel

Embo is applied to SMC panel surfaces through Hansung' s signature surface treatment technology, which improves adhesiveness of SMC panels and skimming actual condition prevention as well as insulation covering.

Design of Unrestricted Capacity

Easy installation depends on installation space and required capacity as well as dismantling and reassembly.

Quality

We pursue the system superiority via sophisticated interpretation of hygiene, durability, rigorous design criteria, quality management, and reliable structure strength. The basis of structure interpretation ensures safety design for tolerance value. The finest safety rating, considering design-external comparison expected based on property after a long-term use of SMC materials for over 15 years, is achieved through expertise of the Hansung Clean Tank.

Excellent Insulation and Dewproofing retaining

The adiabatic function of materials is suitable for single-plate panels of buildings and apartments. Three-overlapping thermal panel boosts insulation effects so as to minimize the difference in temperature resulting from seasonal change.

Perfect Watertightness

Offers flawless watertightness through application of special sealing agent with excellent recovery.

Simple Workability

Standardized components allow on-site assembly and moving installation, expansion or transport to work sites with confined space.

Hygiene and Durability

Blocks external lighting completely, thereby preventing the proliferation of various germs and bacteria inside water tanks. Special coated materials are used inside the structure so as to prevent corrosion and rust; the external structure is resistant to corrosion because of hot-dipped galvanized treatment.

INSTALLATION CONDITIONS AND DESIGN OF SECTIONAL

- **Resistance-seismic Coefficient** Design based on horizontal-seismic coefficient kh=1/3G.
- **Resistance Hydrostatic Pressure** Design fully responsive to hydrostatic pressure; when flooded, the maximum strain of side walls is designed to be less than 1.0% of the total height of the water tank after 48-hours.
- **Wind Pressure Resistance** Designed to withstand maximum wind pressure of 50m/sec even when the tank is empty.
- **Diffuser Strength** There is no water leakage and no defects in the diffusion part even if 100kg load is applied vertically after 100A flange is attached to the side of a full tank with and support with 70cm span.

EXCELLENT HEAT INSULATION

Hansung M&S' Clean Water is..

SMC insulation panels utilize urethane blowing agent (25mm thickness) that has excellent insulating materials for single-structure panels; the exterior is made of sandwiched-structure panels using vacuumed-molded covers with special synthetic resin for high insulation.

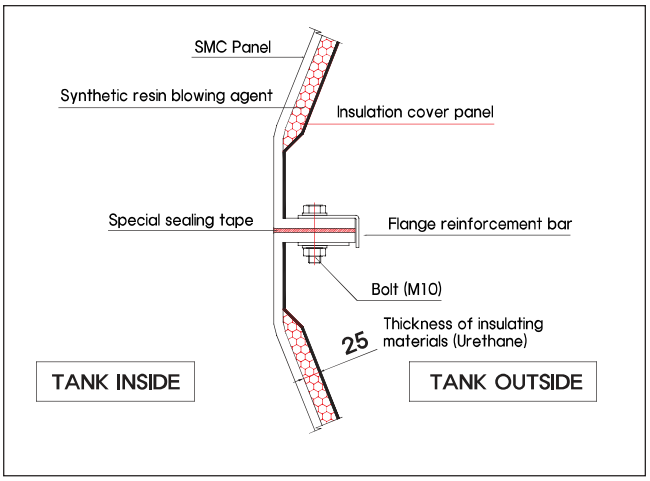

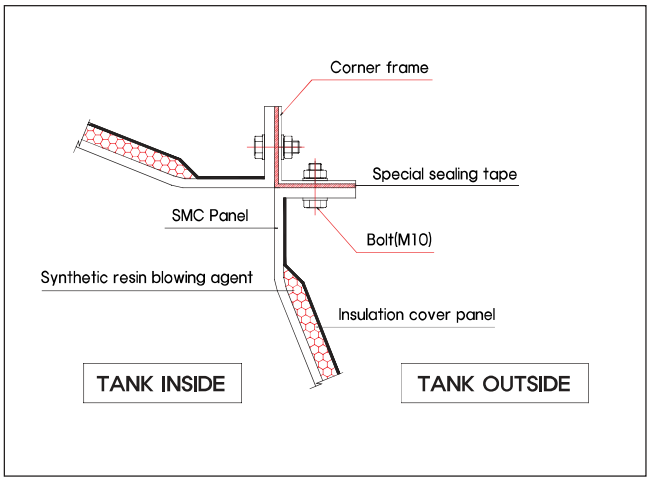

INSULATION PANEL SECTION

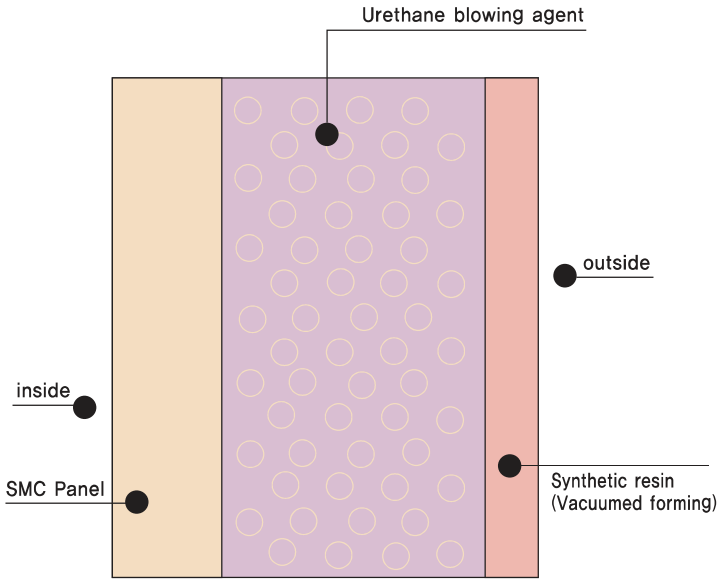

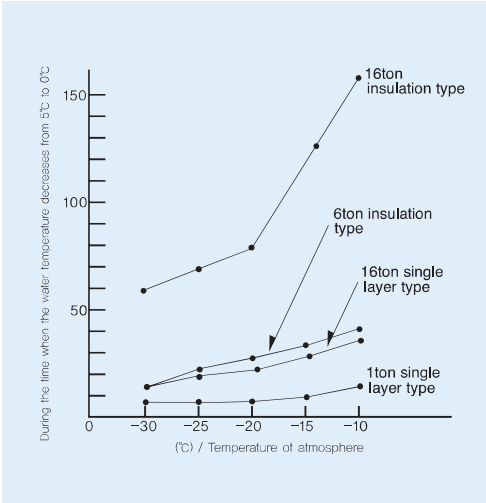

Capacity	Classification	Temperature of Atmosphere		
		-10	-20	30
16 tons	Single Layer Type	35	20	13.5
	Insulation Type	164	81	58.5
1 tons	Single Layer Type	11	6	4
	Insulation Type	37.5	23	13.5

HANSUNG WATER CLEAN TANK - Panel

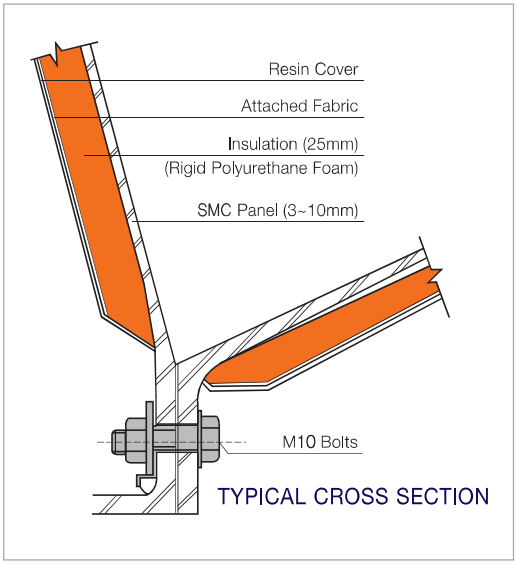

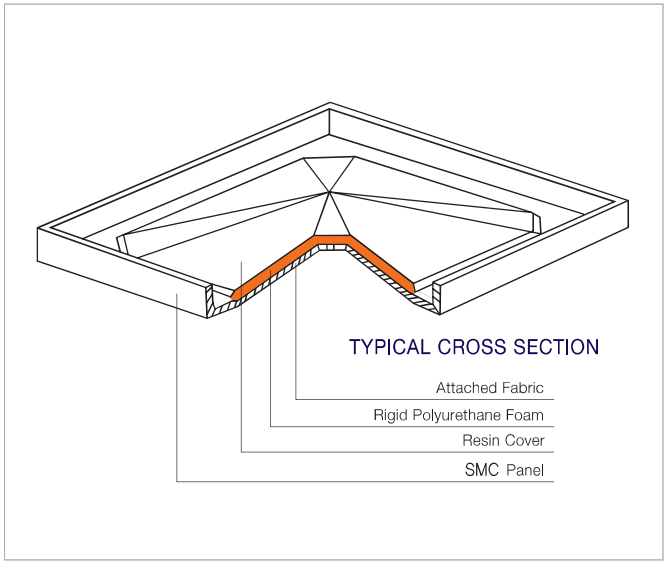

EFFECT OF HEAT

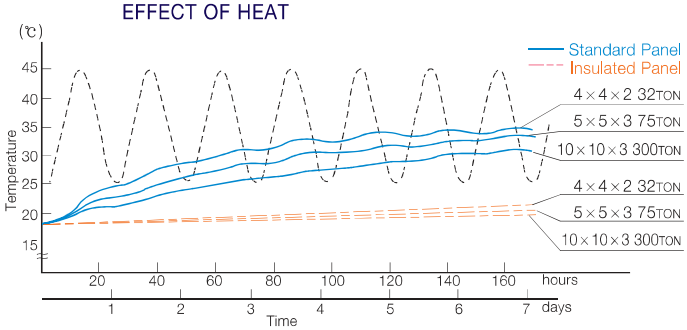

THERMAL CONDUCTIVITY

	Thermal Conductivity Kcal/m.hr°C (J/m hr°C)
STEEL	37.0 (1.55*10⁵)
SMC (Standard)	0.15 (630)
SMC (Insulated)	0.02 (84)

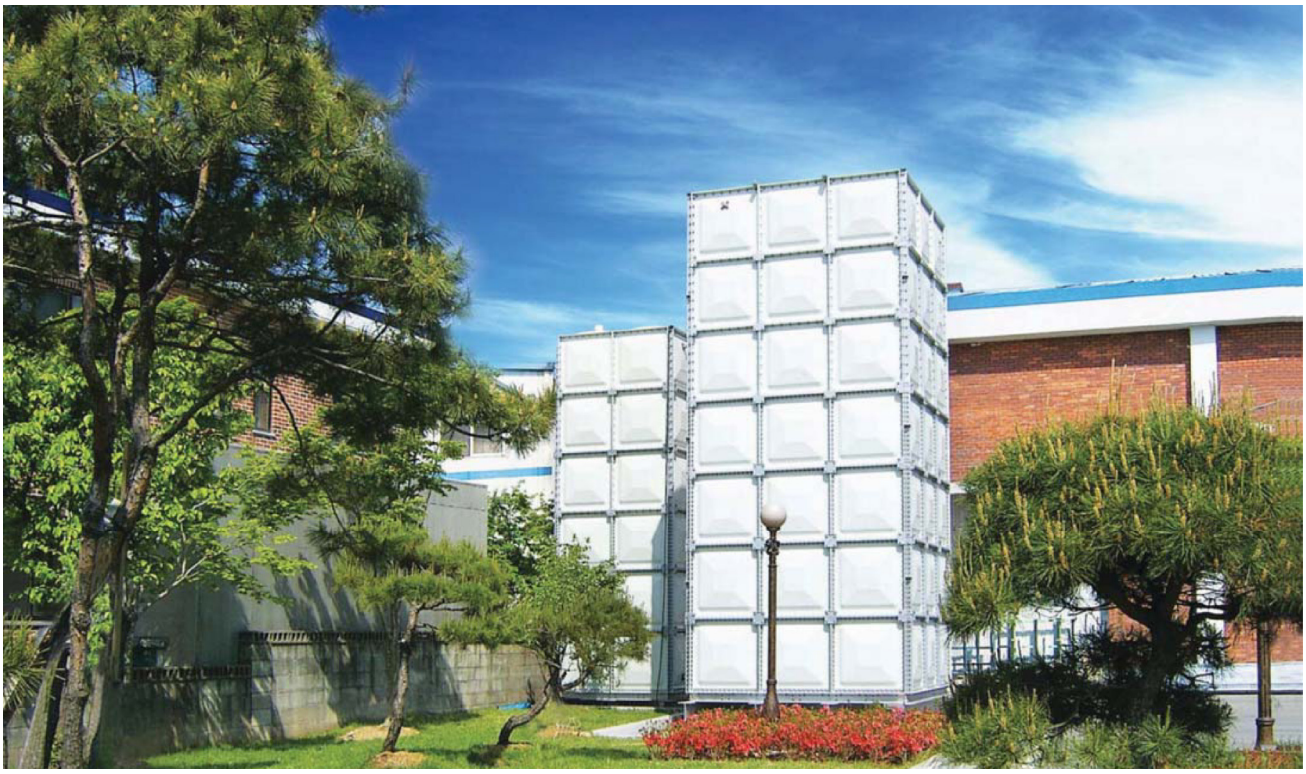

HANSUNG M&S WATER CLEAN TANK - Partition System

Partition Tank

outline

An affordable and convenient multi-purpose tank with easy maintenance. It can be installed in any location without spatial restriction. Install several partitions to have the effects of several water tanks even with just one tank.

Product Features

1. Allows full capacity installation and optimal utilization of installation area at the same location.
   Maximized utilization of restricted areas, such as basements or installation spaces.
2. Application Diversification
   Partition installation allows water tank to be used for different purposes, namely for drinking water, living water, fire hydrant water, etc.
3. Convenient Maintenance
   As a whole, maintenance is convenient as only one tank is used.
4. Cost-effective Installation
   The overall cost decreases as construction cost is more affordable compared to two or more tanks.

Drawings of Installation Cases

If tanks with different purposes should be installed in a basement boiler system where space is limited, install the partition-type as shown in the image, so as to divide a capacity of 16 tons to two 8 tons for drinking and service water. However, if installed separately, the middle 1m shall be left for maintenance in accordance with legal standards, which means you can install a 6-ton capacity only.

Partition Installation

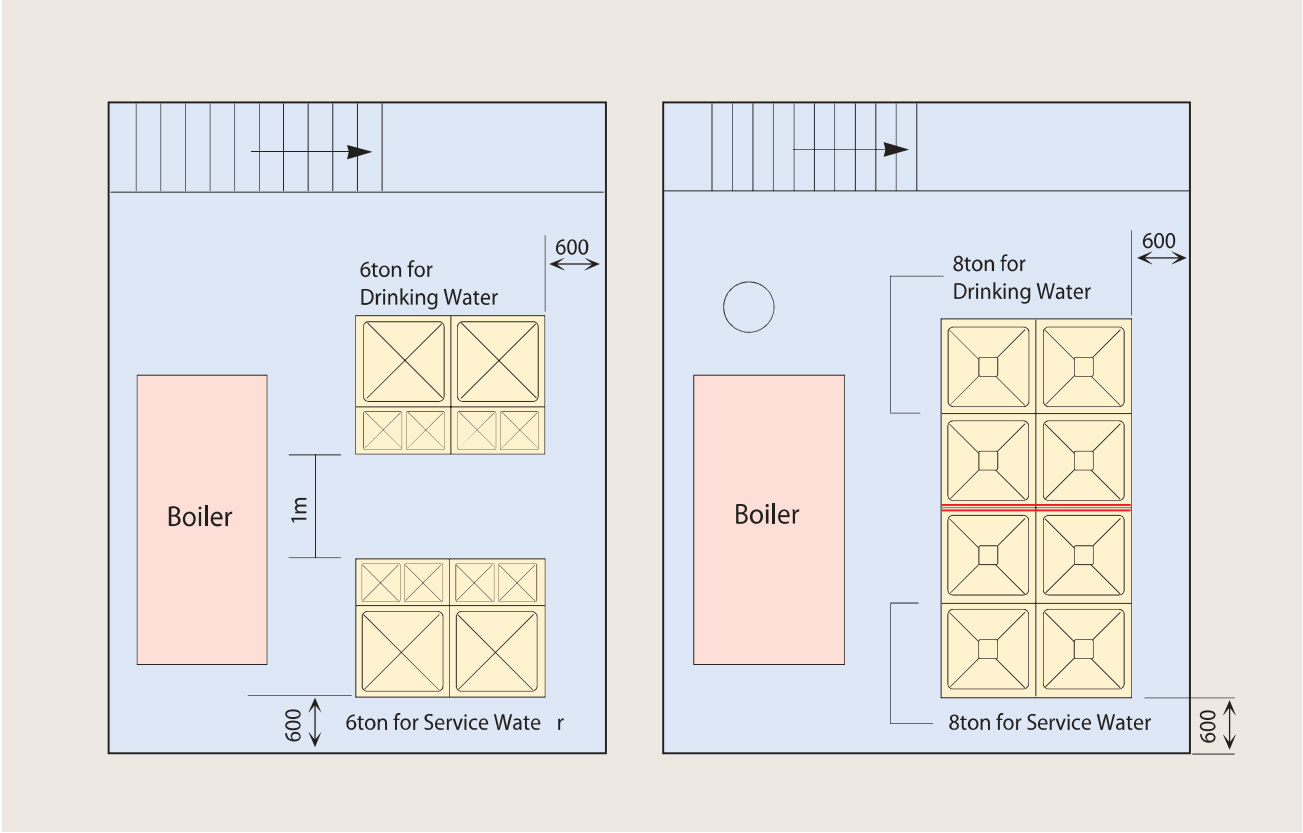

HANSUNG WATER CLEAN TANK - Internal Reinforced System

Prevents proliferation of various germs and allows strong corrosion resistance
The interior panels are connected with stainless stay to secure the strength of the SMC water tank.

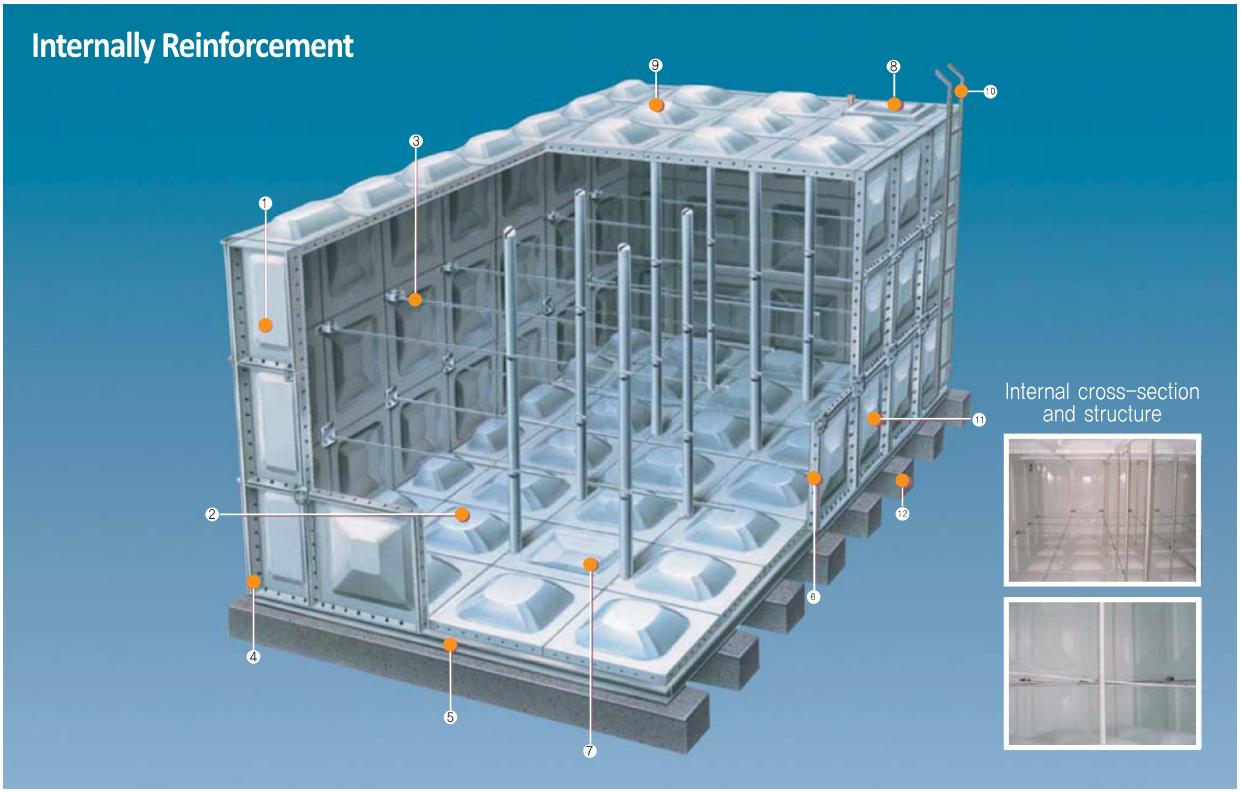

No.	Name	Material
1.	Side plate	SMC
2.	Bottom plate	SMC
3.	Internal reinforcement (turn-buckle)	Stainless steel 304 & 316 (Available to accept pipe made by stainless steel for small and middle size tank)
4.	Corner Frame	SS41(Galvanized Steel)
5.	Base frame	SS41(Galvanized Steel)
6.	Assembly bolt	Inside : SUS304 & 316, Dacro Outside : Dacronized Steel Connection : Rubber Cap + Dacro Size : M10,12,14
7.	Drain plate	SMC
8.	Manhole	SMC
9.	Top plate	SMC
10.	External ladder	SS41(Galvanized Steel)
11.	Side plate	SMC
12.	Concrete pad	

HANSUNG WATER CLEAN TANK - External Reinforced System

Prevents proliferation of various germs and allows strong corrosion resistance.
Supported with externally reinforced frame and top fastened with angular or round bar stay, while the bottom is integrated via bolts using brackets for integrated connection.

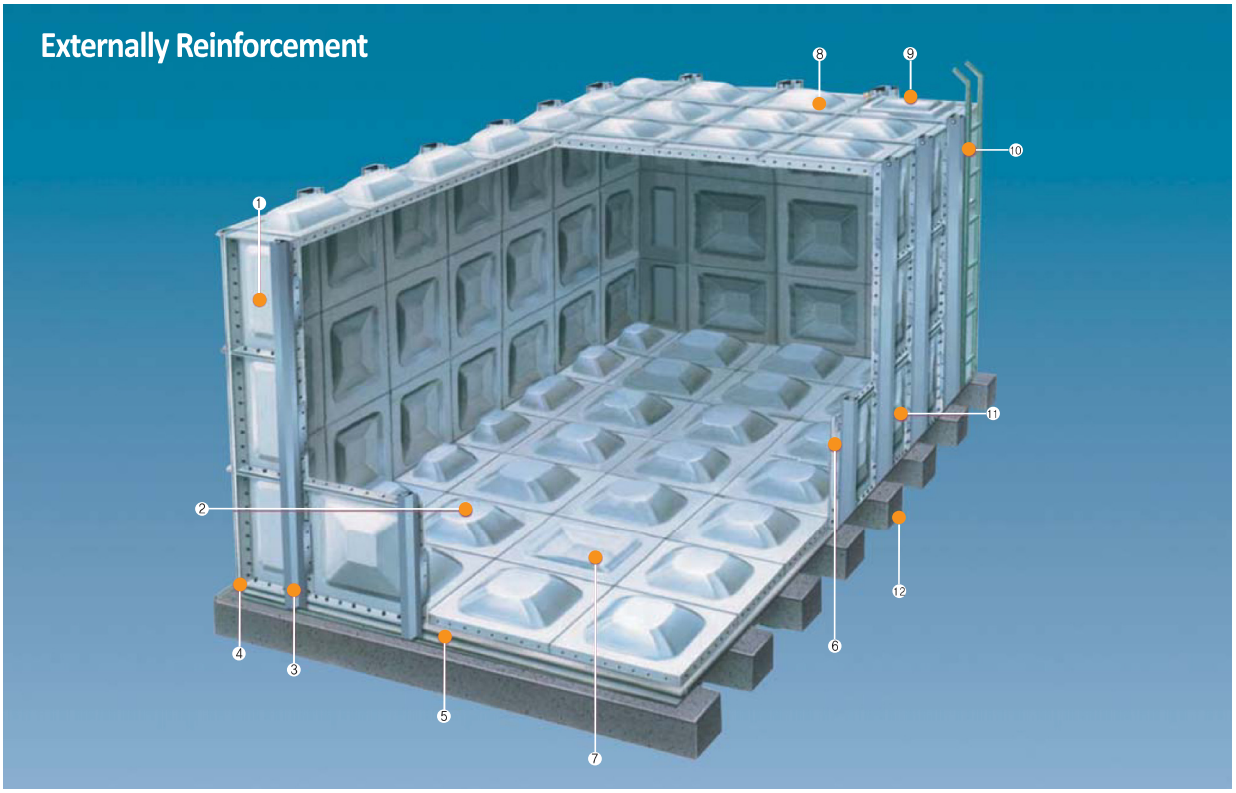

No.	Nam e	Materia l
1.	Side plate	SMC
2.	Bottom plate	SMC
3.	Externally Reinforced-frame	SS41(Galvanized Steel)
4.	Corner Frame	SS41(Galvanized Steel)
5.	Base frame	SS41(Galvanized Steel)
6.	Assembly bolt	Inside : SUS30 4 & 316, Dacro Outside : Dacronized Steel Connection : Rubber Cap + Dacro Size : M10,12,14
7.	Drain plate	SMC
8.	Top plate	SMC
9.	Manhole	SMC
10.	External ladder	SS41(Galvanized Steel)
11.	Side plate	SMC
12.	Concrete pad	

HANSUNG WATER CLEAN TANK - Panel Type and Size

Top panel

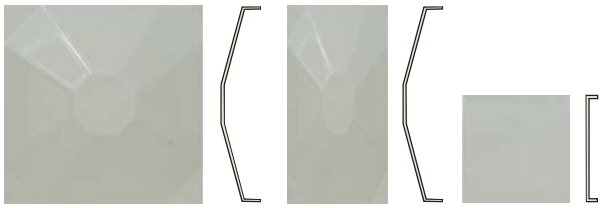

1000 X 1000 500 X 1000 500 X 500

Bottom panel

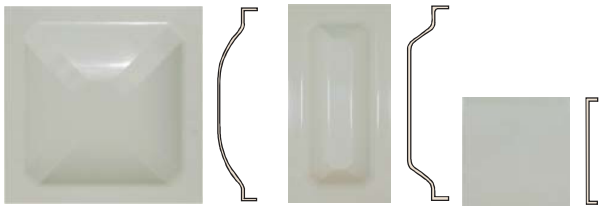

1000 X 1000 500 X 1000 500 X 500

Side panel

1000 X 2000 1000 X 1500 1000 X 1000 500 X 1000 300 X 1000 500 X 500

Drain panel

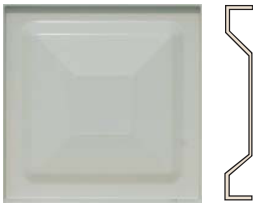

1000 X 1000

Manhole panel

1000 X 1000

▶ ▶ Type and Specification

Hansung SMC panels are pressure-formed with SMC press using mechanical strength, dimensional precision, heat and water resistance, offering strength, durability, and aesthetics; the rectangular-shaped manhole also ensures easy maintenance and cleaning.

HANSUNG WATER CLEAN TANK - Panel Composition

STANDARD SIDE PLATES BY HEIGHT

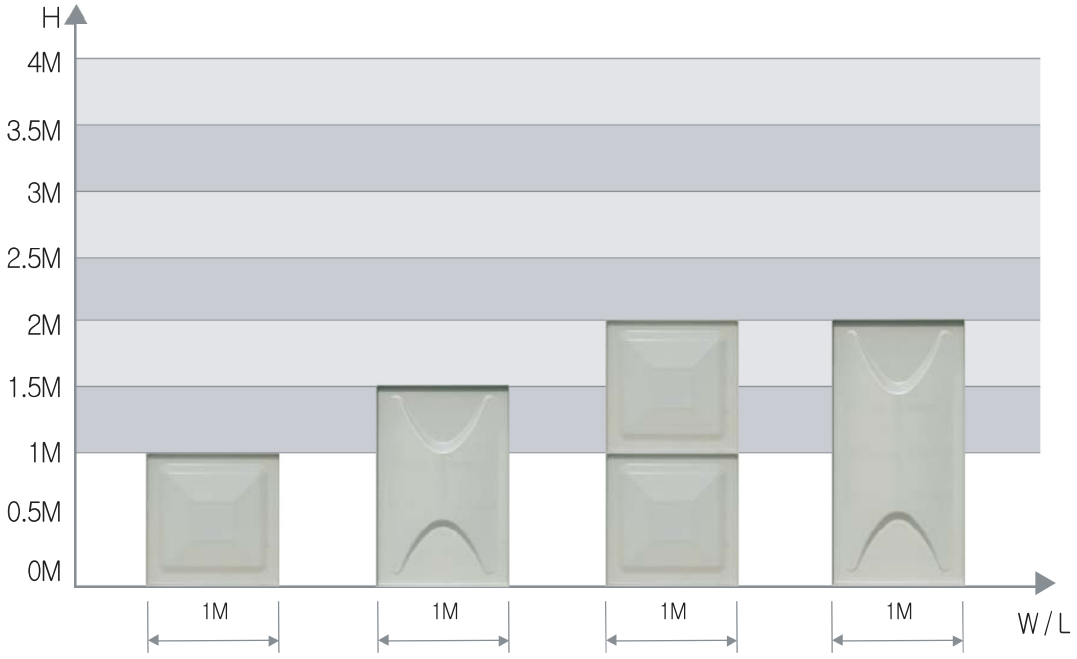

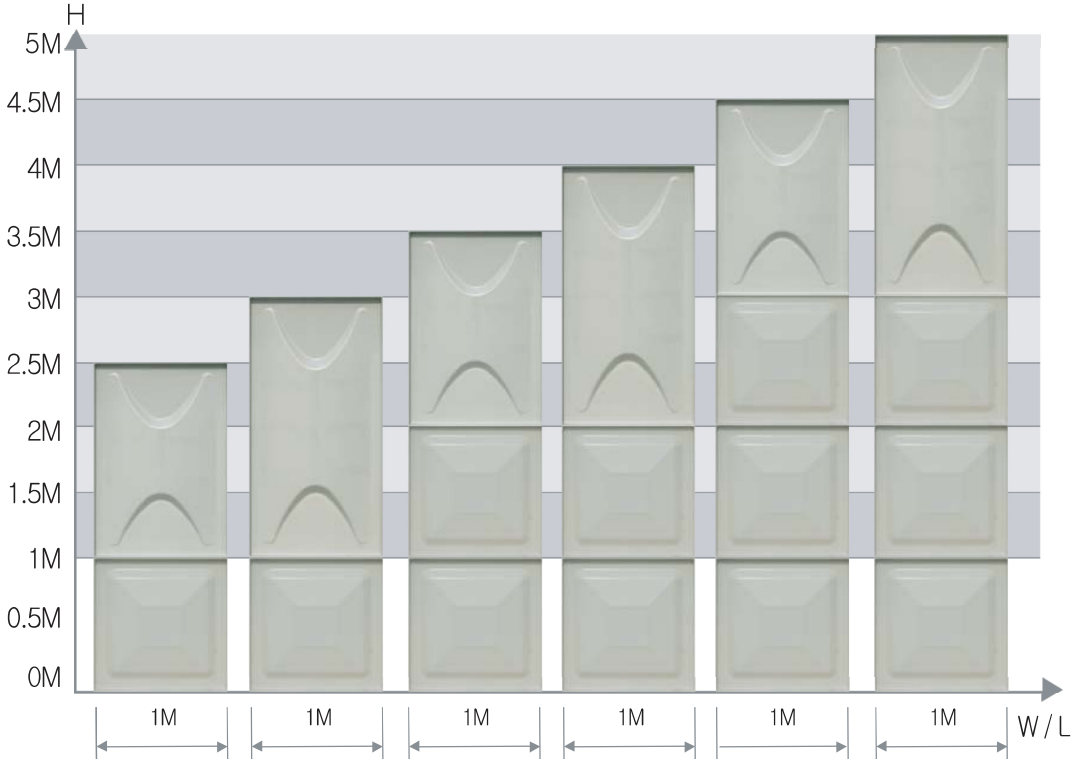

[Note] 1. Different heights are available: 1.3H, 1.8H, 2.3H, 2.8H, 3.3H 3.8H, 4.3H, and 4.8H (Components of the 300 1000 product are not specified.)
2. Product components can be varied depending on installation locations.

HANSUNG WATER CLEAN TANK - Work Area

Construction Scope

1. Foundation Work

Foundation work shall be carried out by the customer according to design specifications, considering the soil strength of tank basic bolt location. The concrete strength of the foundation shall have a capacity of 180kg/㎠ or more. The top of the concrete foundation shall be plastered so as to maintain leveling and finished mortar under 20mm in thickness.

2. Piping Work

Customers shall decide inlet/outlet of water and socket dimension of drain when placing a tank order. The company assembles sockets (flanges) for piping only.
Customers shall carry out socket (flanges) connection for piping, piping work, as well as insulation.
Please install a support to prevent excessive load to the diffuser during piping work; pipes on tanks shall be installed first.

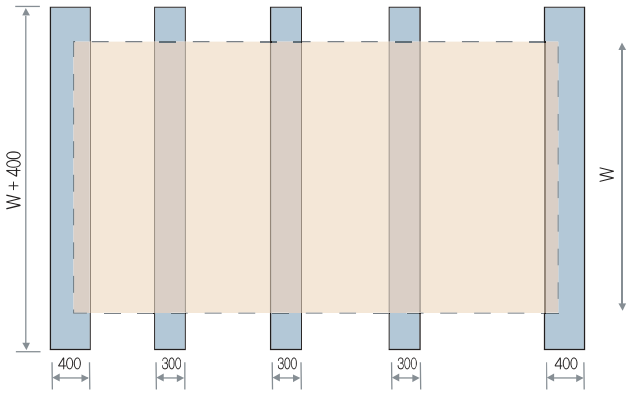

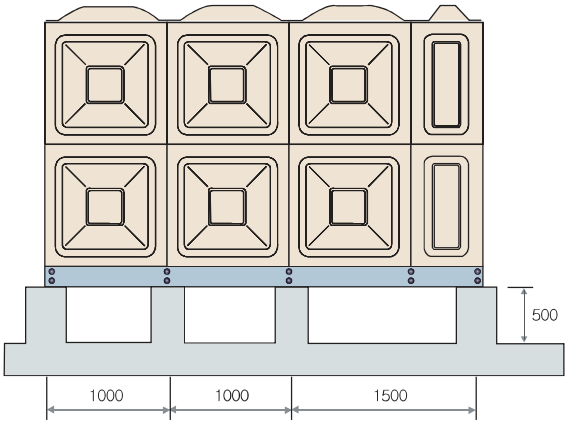

For Reference

1. Installation Space : About 600mm space in all directions is required as shown at the bottom image for maintenance and installation of tanks.
2. Regular Inspection : Hansung Clean Tank is a water tank that stores living water; thus, it requires two regular inspections per year.

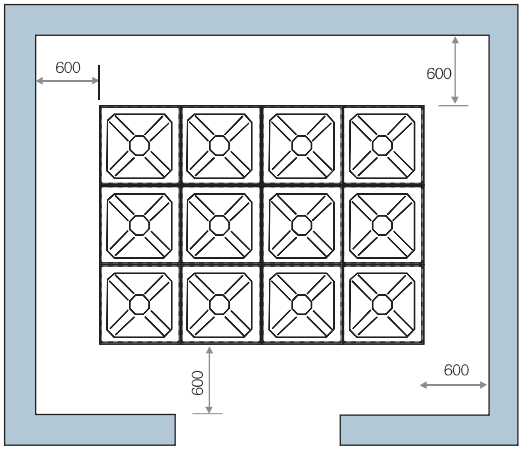

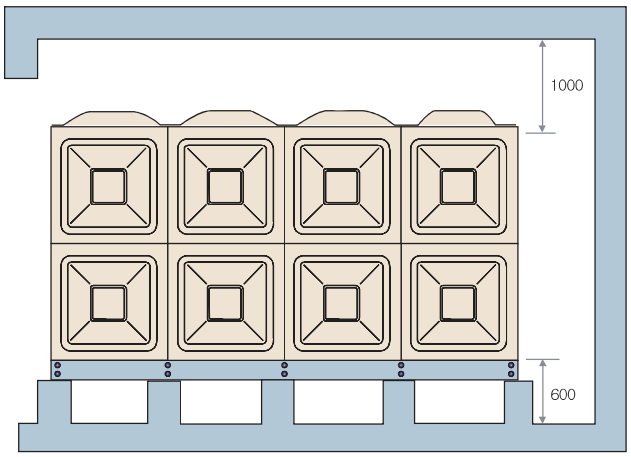

HANSUNG WATER CLEAN TANK - Fitting

1. Socket (red brass)

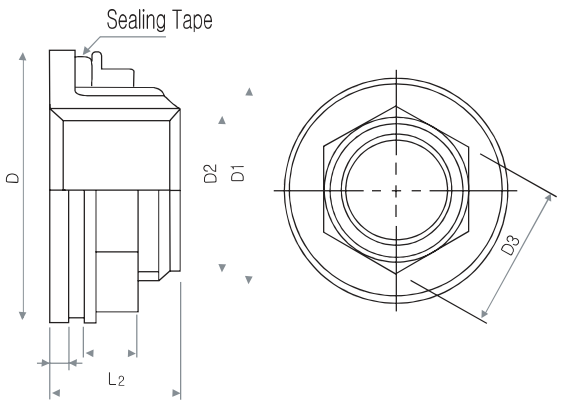

2. Tilt socket (SUS)

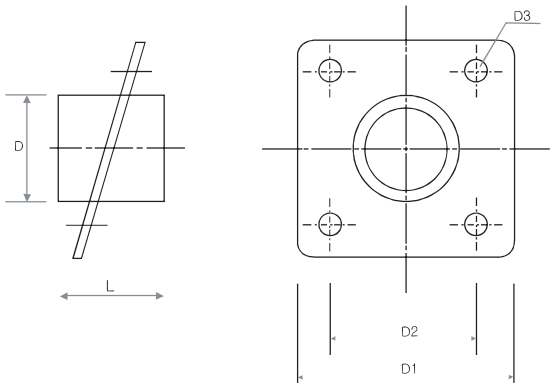

1	D	D1	D2	D3	L1	L2	T
20A	55	33.5	24.1	38	10	25	3.5
25A	65	40	30.3	46	12	30	4
30A	79	49	39	55	12	30	4
40A	85	55	45	61	14	30	4
50A	98	66.5	56.7	72	14	30	4
65A	120	84	72.2	93	16	50	6
75A	132	97	85	105	16	50	6
100A	170	120	110	127	18	40	7

3. Flange type (PVC,SMC)

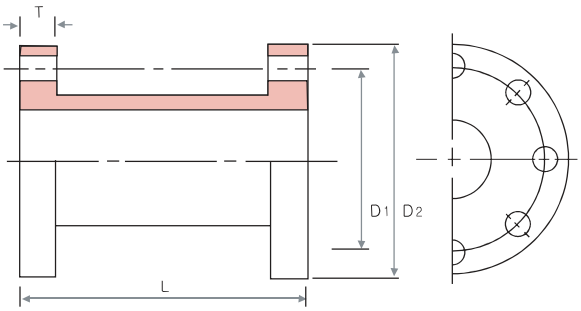

4. Tilt flange type (PVC,SMC)

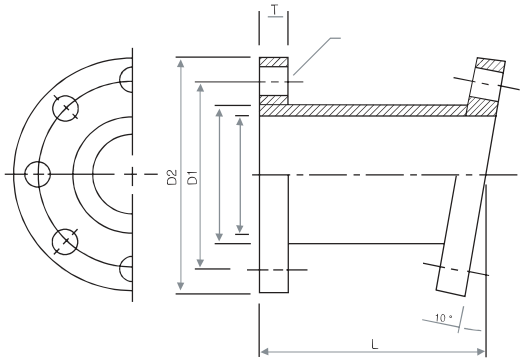

Nominal Specification	D 1	D 2	T	L
65A	140	175	18	150
80A	150	185	18	150
100A	175	210	20	150
125A	210	250	20	150
150A	240	280	20	150

HANSUNG WATER CLEAN TANK CERTIFICATION

PSB TEST ®

WRAS APPROVED PRODUCT

Kibo A+ Members Venture Enterprise

PPS Register Company

INTERNATIONAL CERTIFICATION REGISTRAR Ltd. ISO 9001:2008

Best Quality & Advance Technology

HANSUNG M&S

Clean Workplace Recognition

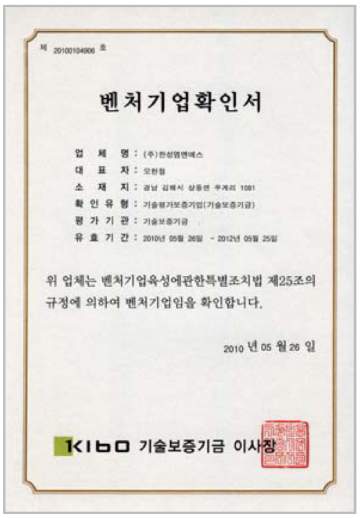

Certificate of Venture Enterprise

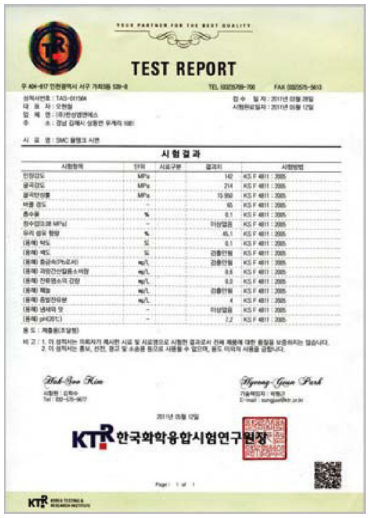

Test Report

ISO 9001:2008

SONHA

THƯƠNG HIỆU QUỐC GIA

Vietnam Value

CÔNG TY CỔ PHẦN KINH DOANH VÀ PHÁT TRIỂN DỰ ÁN SƠN HÀ

Địa chỉ: Lô CN1, Cụm Công nghiệp Từ Liêm, P. Minh Khai, Q. Bắc Từ Liêm, TP. Hà Nội, VN

Điện thoại: +84-4-62656566 | Fax: +84-4-62656588

Hotline: 0904 641 698 | 0913 066 727 | 0975 155 589 | 0989 200 998

Email: support@sonha.com.vn

Website: www.sonha.com.vn