| | | | |
|---|---|---|---|
| Frame : | HGF 355C/D/E | Enclosure : | IP55 (TEFC) |
| Output : | 350 kW | Mounting : | B3T |
| Frequency : | 50 Hz | Rotation : | Both |
| Poles : 4 | | Aprox. weight* : | 6218 lb |
| Rated speed : | 1485 rpm | Moment of inertia : | 296 sq.ft.lb |
| Slip : | 1.00 % | Sound Pressure Level : | 79.0 dB(A) (global) |
| Rated voltage : | 6600V | Foundation loads | |
| Rated current : | 40.8 A | - Max. traction : | 5027 lb |
| L. R. Amperes : | 258 A | - Max. compression : | 11245 lb |
| Il/In : | 6.3 | | |
| No load current : | 14.6 A | | |
| Rated torque : | 1770 ft.lb | | |
| Locked rotor torque : | 145 % | | |
| Breakdown torque : | 230 % | | |
| Insulation class : | F | | |
| Temperature rise : | 80 K | | |
| Locked rotor time : | 18 s (hot) | | |
| Service factor : | 1.15 | | |
| Duty cycle : | S1 | | |
| Ambient temperature : | -20°C to +40°C | | |
| Altitude : | 1000 m.a.s.l | | |

| Load | Power factor | Efficiency (%)** |
|---|---|---|
| 100% | 0.84 | 95.1 |
| 75% | 0.80 | 95.0 |
| 50% | 0.70 | 94.3 |

| | Bearing | Quantity (lubricant) |
|---|---|---|
| Front | 6322-C3 | 60 g |
| Rear | 6320-C3 | 51 g |

Lubrication interval: 4500 h
Grease - MOBIL POLYREX EM

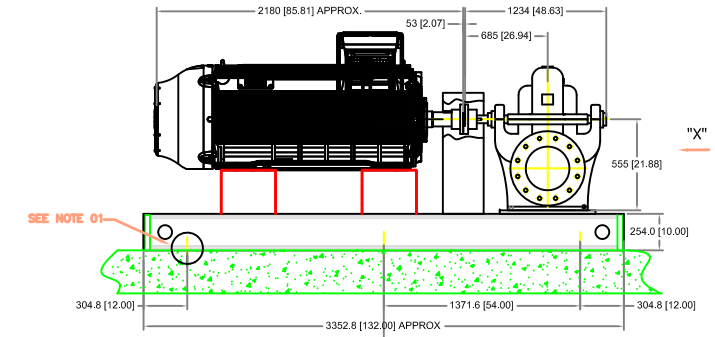


FRONT VIEW

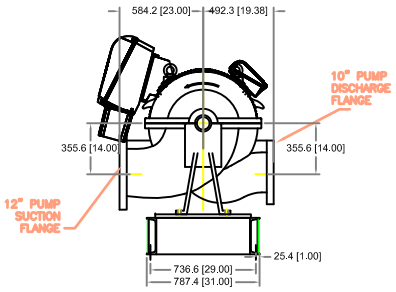


VIEW "X"

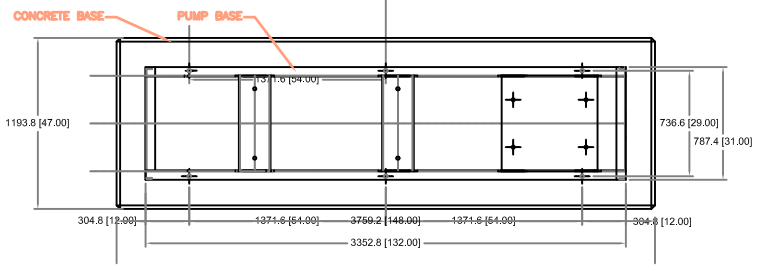


CONCRETE BASE DETAIL

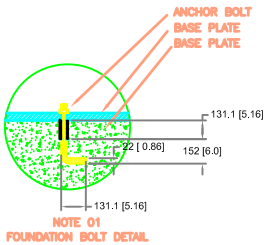


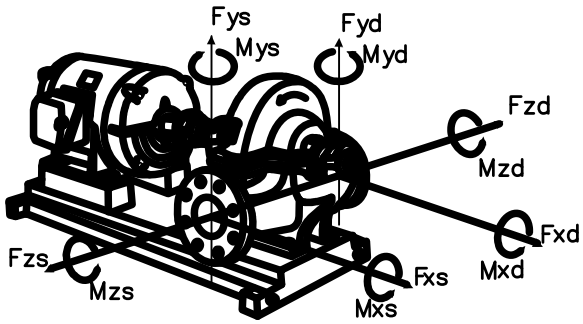


| PUMP SIZE | | FORCES- LBS | | | MOMENTS-FT.LBS | | |
|---|---|---|---|---|---|---|---|
| | | Fx | Fy | Fz | Mx | My | Mz |
| 10x12x18 | DISCHARGE | 1200 | 1500 | 3400 | 3050 | 4500 | 4700 |
| | SUCTION | 1000 | 1250 | 3400 | 3050 | 4500 | 4700 |

DIST'N
PVC
PD
MPB (Site)
Proc M
ALI
PM
JVC
PM
EM
PEN
CVL
PIP
INST
ELC
DHT
D Circulation
S Send Copy

V003-DWG-F-B